GENERAL NOTES:

1. PROTECT INFILTRATION TRENCHES AND UNDERDRAIN TRENCHES FROM SEDIMENTATION DURING CONSTRUCTION.
2. SEE SHEETS CS1 AND CS2 FOR TRAIL HMA AND CRUSHED ROCK BASE THICKNESS.

NOTES

1. FOR SEW WALLS SEE SHEET WD3.
2. CONCRETE HEADWALL FOR PIPE SHALL BE CONSTRUCTED OF 4000 PSI REINFORCED CONCRETE. DETAIL SHALL BE PROVIDED BY WALL MANUFACTURER.
3. CONCRETE HEADWALL TO BE CONSTRUCTED FOR NEW AND EXISTING STORM DRAINS AND CULVERTS PER UT SHEETS
4. EXTEND STEEL SLEEVE 2.0' MINIMUM IN FRONT OF FACE OF WALL.

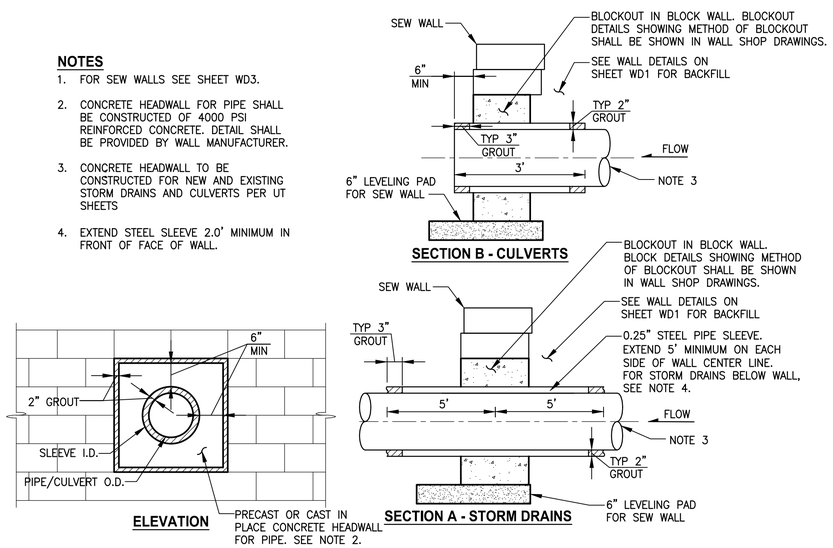

CONCRETE HEADWALL FOR STRUCTURAL EARTH WALL
DETAIL 1
NOT TO SCALE

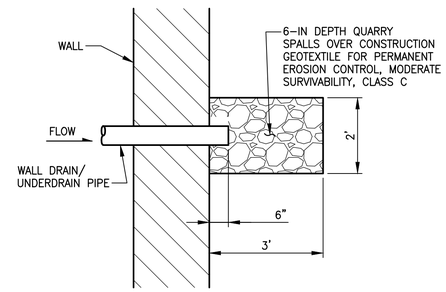

ROCK PAD PLAN VIEW
DETAIL 2
NOT TO SCALE

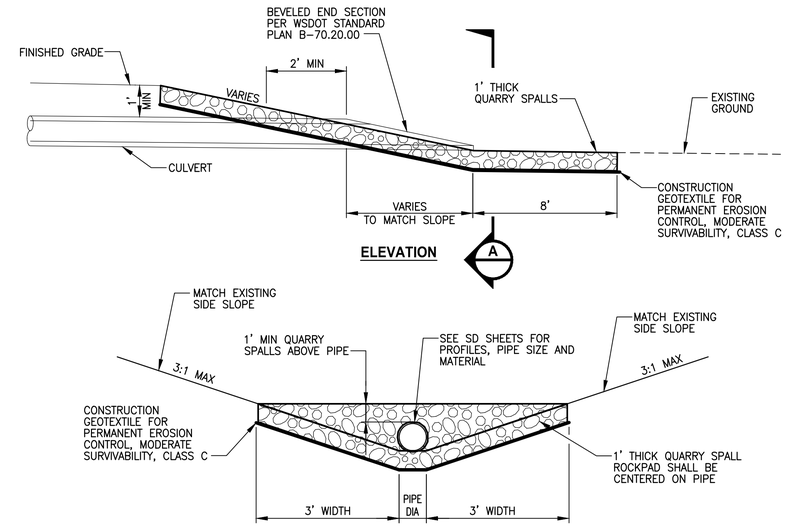

QUARRY SPALL OUTFALL PROTECTION
DETAIL 3
NOT TO SCALE

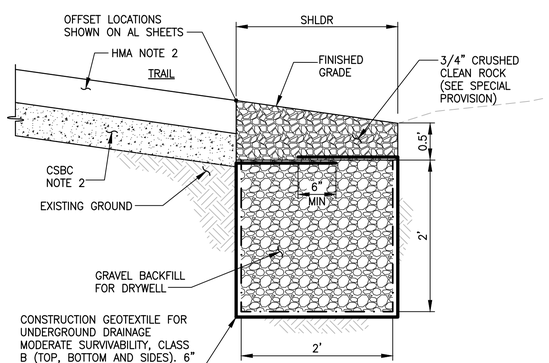

NOTE:

1. SEE TYPICAL SECTION F ON SHEET CS2 FOR PERMEABLE BALLAST INFILTRATION TRENCH.

INFILTRATION TRENCH
DETAIL 4
NOT TO SCALE

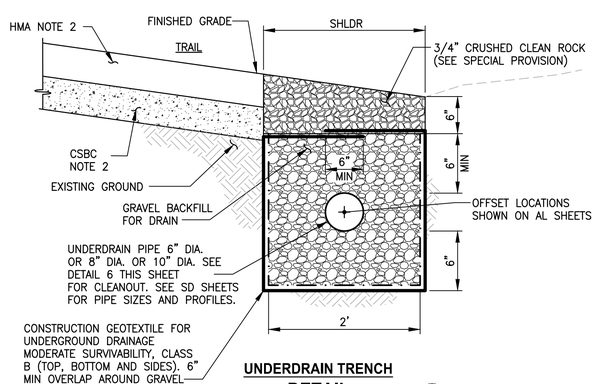

UNDERDRAIN TRENCH
DETAIL 5
NOT TO SCALE

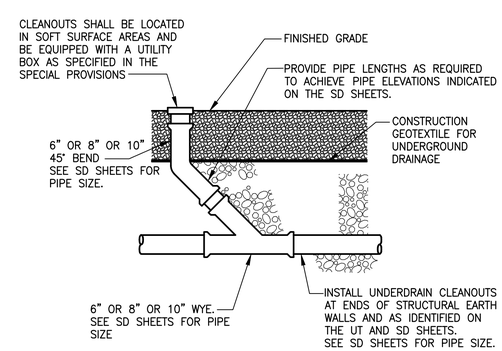

UNDERDRAIN TRENCH CLEANOUT
DETAIL 6
NOT TO SCALE

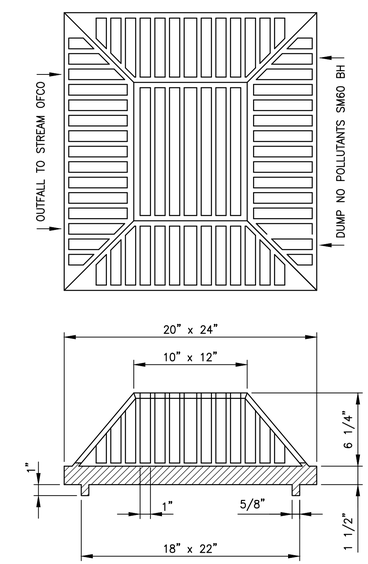

NOTE:

1. BEEHIVE GRATE USED FOR CB TYPE 1 AT STA 361+34 RT AND STA 436+33 RT. SEE SHEET UT12 AND UT21.

BEEHIVE GRATE
DETAIL 7
NOT TO SCALE

CITY OF SAMMAMISH APPROVAL	
City Engineer	Date
Community Development	Date

90 % REVIEW SUBMITTAL
NOT FOR CONSTRUCTION

REVISIONS	DATE	BY

DESIGNED C. BUITRAGO
DRAWN B. PURGANAN
CHECKED Y. HO
APPROVED J. BAILEY

ONE INCH AT FULL SCALE. IF NOT, SCALE ACCORDINGLY
FILE NAME BL1521075P19T03DD-01
JOB No. 554-1521-075 P19 T03
DATE FEBRUARY 2019

PRELIMINARY
CRAIG ALEXANDER BULLOCK
STATE OF WASHINGTON
49427
REGISTERED PROFESSIONAL ENGINEER

Parametrix
ENGINEERING . PLANNING . ENVIRONMENTAL SCIENCES
719 2ND AVENUE, SUITE 200 | SEATTLE, WA 98104
P 206.394.3700
WWW.PARAMETRIX.COM

PROJECT NAME
EAST LAKE SAMMAMISH
MASTER PLAN TRAIL
SOUTH SAMMAMISH SEGMENT B
SAMMAMISH, WA

DRAINAGE DETAILS

SHEET NO.
156 OF 274
DD1

PATH: U:\PSO\Projects\Clients\1521-KingCo\554-1521-075-ELST\995vca\CADD\Phase 19\T03 Civil\Dwg\
PLOTTED BY: purgabut DATE: Wednesday, February 27, 2019 8:54:35 PM
LAYOUT: DD1

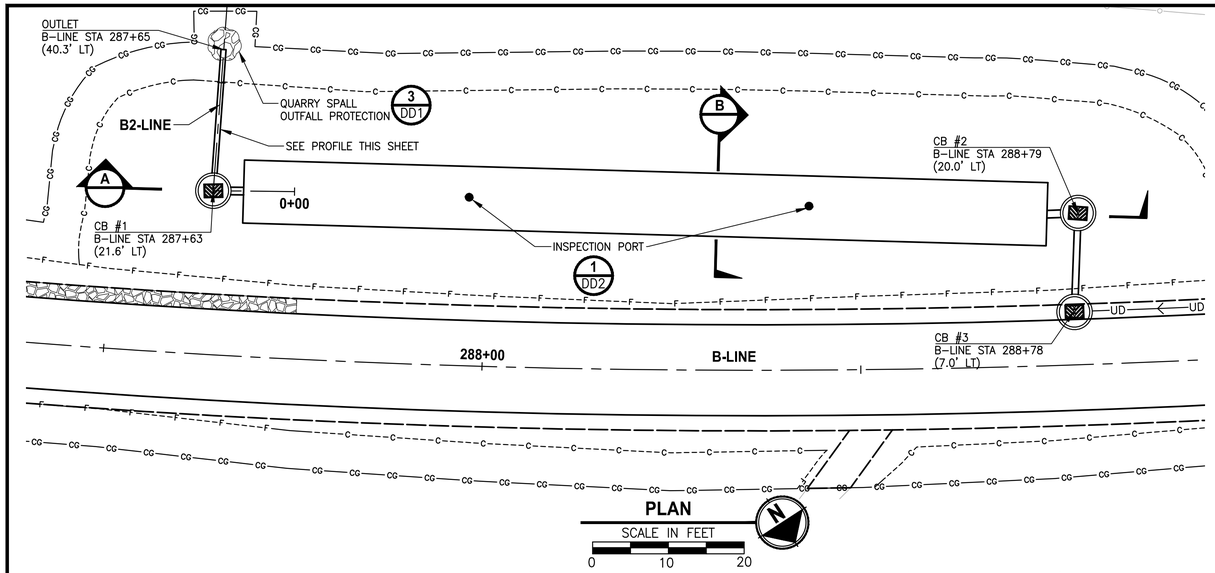

PLAN

SCALE IN FEET

0 10 20

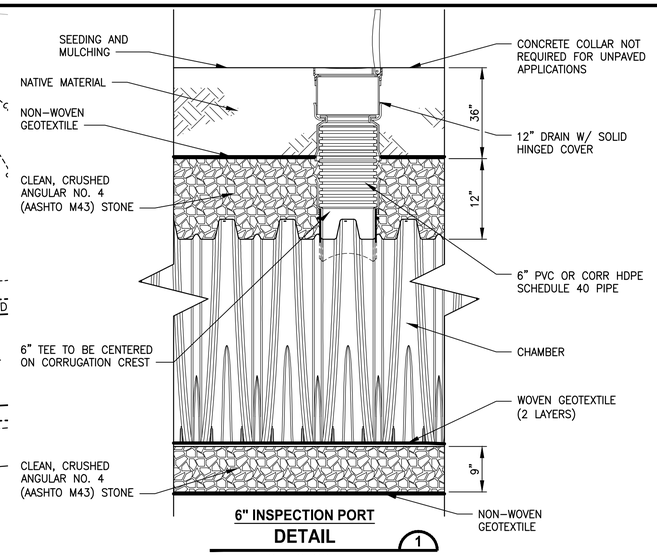

6" INSPECTION PORT

DETAIL 1

NOT TO SCALE

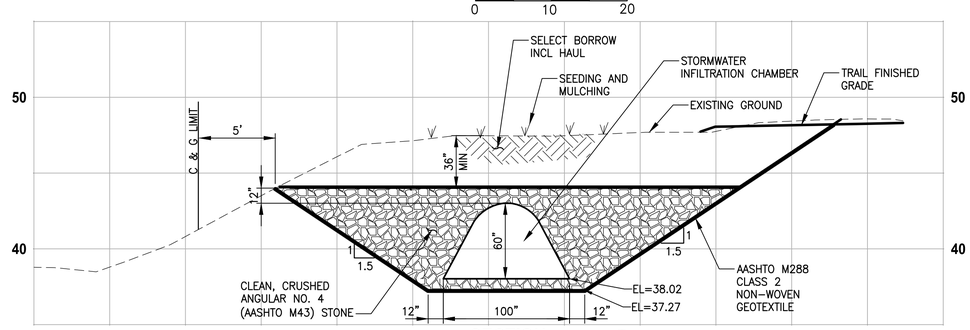

SECTION B

HORIZ: 1"=5'
VERT: 1"=5'

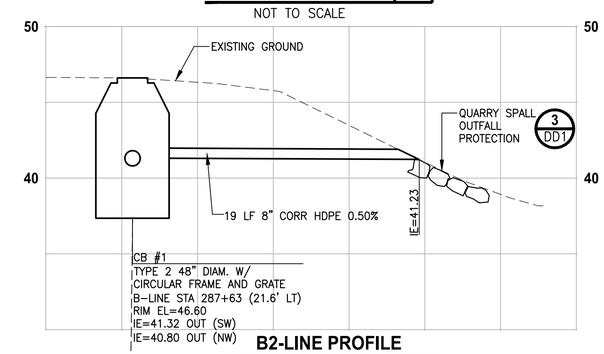

B2-LINE PROFILE

HORIZ: 1"=5'
VERT: 1"=5'

STORMWATER INFILTRATION CHAMBER SPECIFICATIONS:

1. CHAMBERS SHALL CONFORM TO REQUIREMENTS OF ASTM F2418 STANDARD SPECIFICATION FOR POLYPROPYLENE (PP) CORRUGATED WALL STORMWATER COLLECTION CHAMBERS.
2. CHAMBERS SHALL BE DESIGNED IN ACCORDANCE WITH ASTM F2787 "STANDARD PRACTICE FOR STRUCTURAL DESIGN OF THERMOPLASTIC CORRUGATED WALL STORMWATER COLLECTION CHAMBERS."
3. CHAMBER SHALL PROVIDE CONTINUOUS, UNOBSTRUCTED INTERNAL SPACE WITH NO INTERNAL SUPPORT PANELS THAT WOULD IMPEDE FLOW OR LIMIT ACCESS FOR INSPECTION.
4. ONLY CHAMBERS THAT ARE APPROVED BY THE SITE DESIGN ENGINEER WILL BE ALLOWED. THE CHAMBER MANUFACTURER SHALL SUBMIT THE FOLLOWING UPON REQUEST TO THE SITE DESIGN ENGINEER FOR APPROVAL BEFORE DELIVERING CHAMBERS TO THE PROJECT SITE:
   a. A STRUCTURAL EVALUATION SEALED BY A REGISTERED PROFESSIONAL ENGINEER THAT DEMONSTRATES THAT THE SAFETY FACTORS ARE GREATER THAN OR EQUAL TO 1.95 FOR DEAD LOAD AND 1.75 FOR LIVE LOAD, THE MINIMUM REQUIRED BY ASTM F2787 AND BY AASHTO FOR THERMOPLASTIC PIPE.
   b. A STRUCTURAL EVALUATION SEALED BY A REGISTERED PROFESSIONAL ENGINEER THAT DEMONSTRATES THAT THE LOAD FACTORS SPECIFIED IN THE AASHTO LRFD BRIDGE DESIGN SPECIFICATIONS, SECTION 12.12, ARE MET. THE 50 YEAR CREEP MODULUS DATA SPECIFIED IN ASTM F2418 MUST BE USED AS PART OF THE AASHTO STRUCTURAL EVALUATION TO VERIFY LONG-TERM PERFORMANCE.
   c. STRUCTURAL CROSS SECTION DETAIL ON WHICH THE STRUCTURAL EVALUATION IS BASED.
6. CHAMBERS AND END CAPS SHALL BE PRODUCED AT AN ISO 9001 CERTIFIED MANUFACTURING FACILITY.

NOTES FOR CONSTRUCTION EQUIPMENT:

1. CHAMBERS SHALL BE INSTALLED IN ACCORDANCE WITH THE MANUFACTURER'S CONSTRUCTION GUIDE.
2. THE USE OF EQUIPMENT OVER CHAMBERS IS LIMITED:
   - NO EQUIPMENT IS ALLOWED ON BARE CHAMBERS.
   - NO RUBBER TIRED LOADER, DUMP TRUCK, OR EXCAVATORS ARE ALLOWED UNTIL PROPER FILL DEPTHS ARE REACHED IN ACCORDANCE WITH THE MANUFACTURER'S CONSTRUCTION GUIDE.
   - WEIGHT LIMITS FOR CONSTRUCTION EQUIPMENT CAN BE FOUND IN THE MANUFACTURER'S CONSTRUCTION GUIDE.
3. FULL 36" (900 mm) OF STABILIZED COVER MATERIALS OVER THE CHAMBERS IS REQUIRED FOR DUMP TRUCK TRAVEL OR DUMPING.
4. USE OF A DOZER TO PUSH EMBEDMENT STONE AROUND THE CHAMBERS MAY CAUSE DAMAGE TO CHAMBERS AND IS NOT AN ACCEPTABLE BACKFILL METHOD. ANY CHAMBERS DAMAGED BY USING A "DUMP AND PUSH" METHOD MUST BE REPLACED AT THE FULL RESPONSIBILITY OF THE CONTRACTOR.

BACKFILL AND COMPACTION NOTES:

1. FOR 9" CLEAN, CRUSHED, ANGULAR STONE BELOW CHAMBERS, PLATE COMPACT OR ROLL TO ACHIEVE 95% STANDARD PROCTOR DENSITY.
2. NO COMPACTION REQUIRED FOR GRAVEL BACKFILL FOR DRYWELLS PLACED AROUND AND 12-INCH DEPTH OVER CHAMBERS.
3. GRAVEL BACKFILL FOR DRYWELLS PLACED AROUND AND 12-INCH DEPTH OVER CHAMBERS MUST ALWAYS BE BROUGHT UP EVENLY WITH BACKFILL OF BED. MATERIAL MUST EXTEND HORIZONTALLY TO THE EXCAVATION WALL FOR EITHER STRAIGHT OR SLOPED EXCAVATED SIDEWALLS.
4. BEGIN COMPACTION AFTER 24" OF MATERIAL OVER THE CHAMBERS IS REACHED. COMPACT ADDITIONAL LAYERS IN 12" MAX LIFTS TO A MIN 95% PROCTOR DENSITY FOR WELL GRADED MATERIAL AND 95% RELATIVE DENSITY FOR PROCESSED AGGREGATE MATERIALS.

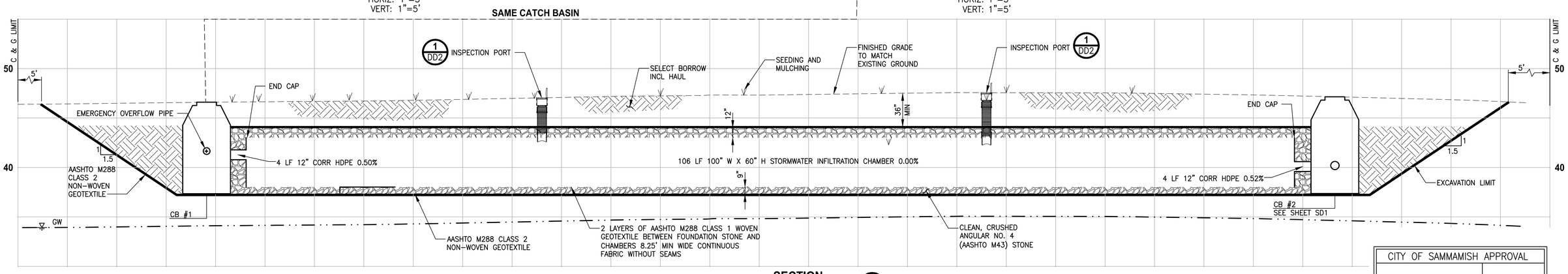

SECTION A

HORIZ: 1"=5'
VERT: 1"=5'

CITY OF SAMMAMISH APPROVAL	
City Engineer	Date
Community Development	Date

90 % REVIEW SUBMITTAL
NOT FOR CONSTRUCTION

	REVISIONS	DATE	BY

DESIGNED C. BUITRAGO
DRAWN B. PURGANAN
CHECKED Y. HO
APPROVED J. BAILEY

ONE INCH AT FULL SCALE. IF NOT, SCALE ACCORDINGLY
FILE NAME BL1521075P19T03DD-01
JOB No. 554-1521-075 P19 T03
DATE FEBRUARY 2019

PRELIMINARY
CRAIG ALEXANDER BUITRAGO
STATE OF WASHINGTON
49427
REGISTERED PROFESSIONAL ENGINEER

Parametrix
ENGINEERING . PLANNING . ENVIRONMENTAL SCIENCES
719 2ND AVENUE, SUITE 200 | SEATTLE, WA 98104
P 206.394.3700
WWW.PARAMETRIX.COM

PROJECT NAME
EAST LAKE SAMMAMISH
MASTER PLAN TRAIL
SOUTH SAMMAMISH SEGMENT B
SAMMAMISH, WA

DRAINAGE DETAILS

SHEET NO.
157 OF 274
DD2

PATH: U:\PSO\Projects\Clients\1521-KingCo\554-1521-075-ELST\99Svcs\CADD\Phase 19\T03 Civil\Dwg\ PLOTTED BY: purgabut DATE: Wednesday, February 27, 2019 8:54:47 PM
LAYOUT: DD2

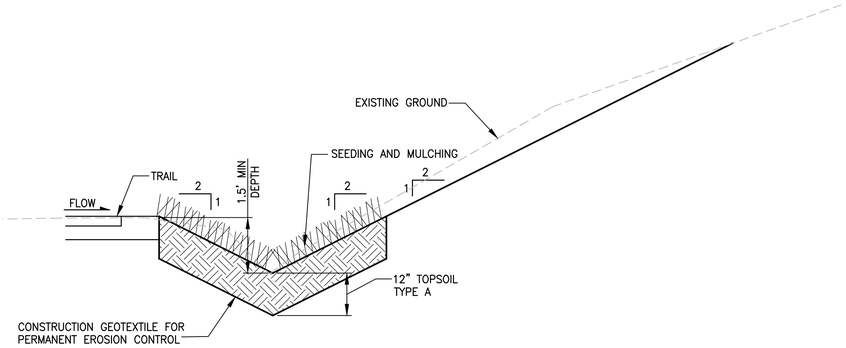

DITCH - STA 361+24 TO STA 361+58

DETAIL 1

NOT TO SCALE

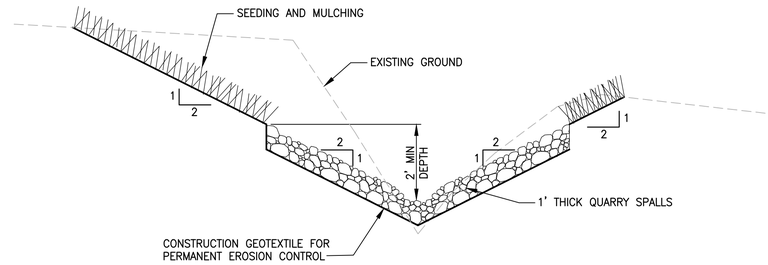

ROCK LINED DITCH - STA 290+02

DETAIL 2

NOT TO SCALE

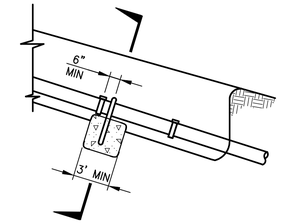

STRAP-FOOTING ANCHOR

NOTE:

1. FOR SOLID WALL HDPE, PIPE MUST BE FREE TO SLIDE INSIDE A 4' LONG SECTION OF PIPE ONE SIZE DIAMETER LARGER.

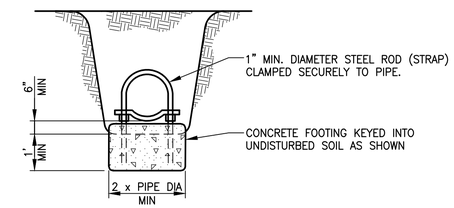

SECTION A-A

PIPE ANCHOR

DETAIL 3

NOT TO SCALE

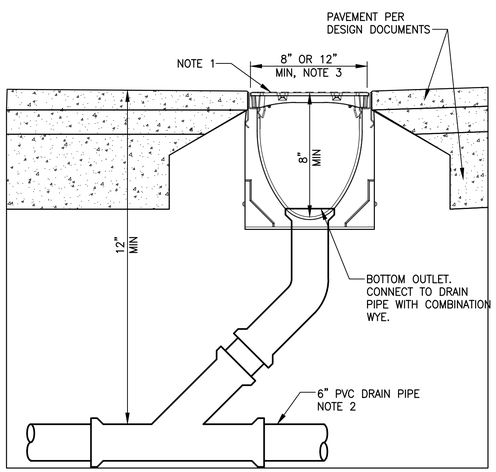

CHANNEL DRAIN

DETAIL 4

NOT TO SCALE

NOTES:

1. ADA COMPLIANCE METAL GRATE. MIN LOAD CLASS A, 40-70 PSI.
2. MIN DRAIN PIPE COVER – 1FT.
3. 12" AT STA 298+43 TO 298+74, 8" AT STA 361+15 (50' LT), AND FOR PEDESTRIAN PATH NEAR STA 433+50.

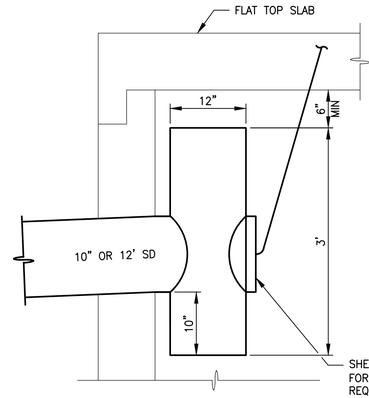

NOTES:

1. FROP-T SHALL CONFORM TO RESTRICTOR DETAIL KCRS FIG. 7-025 WITH THE SPECIFIC CHANGES PROVIDED IN DETAIL 2.
2. FROP-T SHALL NOT HAVE ELBOW RESTRICTORS.
3. FROP-T SHALL NOT HAVE A RESTRICTOR PLATE ON THE BOTTOM END. THE TOP AND BOTTOM ENDS SHALL BE OPEN.
4. TOP OF FROP-T SHALL HAVE A MINIMUM OF 6 IN. VERTICAL CLEARANCE FROM INTERIOR OF CATCH BASIN WALL
5. PROVIDE AT LEAST ONE 3 X 0.090 GAUGE SUPPORT BRACKET ANCHORED TO THE CONCRETE WALL WITH 5/8 IN. STAINLESS STEEL EXPANSION BOLTS OR EMBEDDED SUPPORTS 2 IN. INTO CATCH BASIN WALL (VERTICAL SPACING).
6. THE FROP-T SHALL BE FABRICATED FROM 0.060" CORRUGATED ALUMINUM ALLOY DRAIN PIPE, OR 0.064" CORRUGATED ALUMINIZED STEEL DRAIN PIPE, OR 0.060" ALUMINUM ALLOY FLAT SHEET, IN ACCORDANCE WITH ASTM B 209, 5052 H32 OR EPS HIGH DENSITY POLYETHYLENE STORM SEWER PIPE.
6. FROP-T USED FOR CB TYPE 2 AT STA 361+34 LT AND STA 435+69 LT.

FROP-T

DETAIL 5

NOT TO SCALE

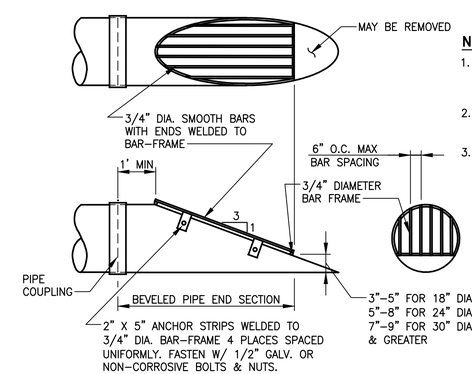

NOTES:

1. CMP OR LINED CPE PIPE END-SECTION SHOWN; FOR CONCRETE PIPE BEVELED END SECTION, SEE KCRDCS DRAWING NO. 7-001.
2. ALL STEEL PARTS MUST BE GALVANIZED AND ASPHALT COATED (TREATMENT 1 OR BETTER).
3. DEBRIS BARRIER USED AT STA 325+82 RT, STA 326+98 RT, STA 364+27 RT, STA 366+95 RT, STA 384+26 RT, STA 438+68 RT, STA 438+50 RT AND STA 455+82 RT.

DEBRIS BARRIER

DETAIL 6

NOT TO SCALE

CITY OF SAMMAMISH APPROVAL	
City Engineer	Date
Community Development	Date

90 % REVIEW SUBMITTAL

NOT FOR CONSTRUCTION

	REVISIONS	DATE	BY	
				DESIGNED C. BUITRAGO
				DRAWN B. PURGANAN
				CHECKED Y. HO
				APPROVED J. BAILEY

ONE INCH AT FULL SCALE. IF NOT, SCALE ACCORDINGLY

FILE NAME BL1521075P19T03DD-01

JOB No. 554-1521-075 P19 T03

DATE FEBRUARY 2019

PRELIMINARY

CRAIG ALEXANDER BUITRAGO · STATE OF WASHINGTON · 49427 · REGISTERED PROFESSIONAL ENGINEER

Parametrix
ENGINEERING . PLANNING . ENVIRONMENTAL SCIENCES
719 2ND AVENUE, SUITE 200 | SEATTLE, WA 98104
P 206.394.3700
WWW.PARAMETRIX.COM

PROJECT NAME
EAST LAKE SAMMAMISH
MASTER PLAN TRAIL
SOUTH SAMMAMISH SEGMENT B
SAMMAMISH, WA

DRAINAGE DETAILS

SHEET NO. 158 OF 274

DD3

PATH: U:\PSO\Projects\Clients\1521-KingCo\554-1521-075-ELST\99Svcs\CADD\Phase 19\T03 Civil\Dwg\ PLOTTED BY: purgabut DATE: Wednesday, February 27, 2019 8:54:59 PM LAYOUT: DD3