East Lake Sammamish Master Plan Trail

Zackuse Creek Culvert Replacement –
Schedule C Shore Lane

Contract No. C01281C18

Volume 3 of 3

Contract Drawings

May 2018

King County

Department of Natural Resources and Parks
Parks and Recreation Division

East Lake Sammamish Master Plan Trail

Zackuse Creek Culvert Replacements

King County, Washington

Schedule~~s B And~~ C

SCHEDULE B WORK
NOT IN CONTRACT (N.I.C.)

Contract No. ~~C01271C18~~ CO1281C18

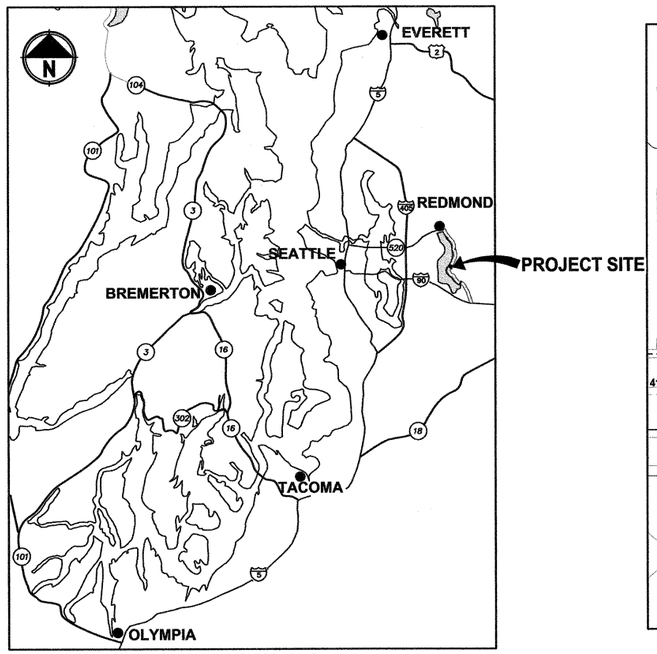

LOCATION MAP
NOT TO SCALE

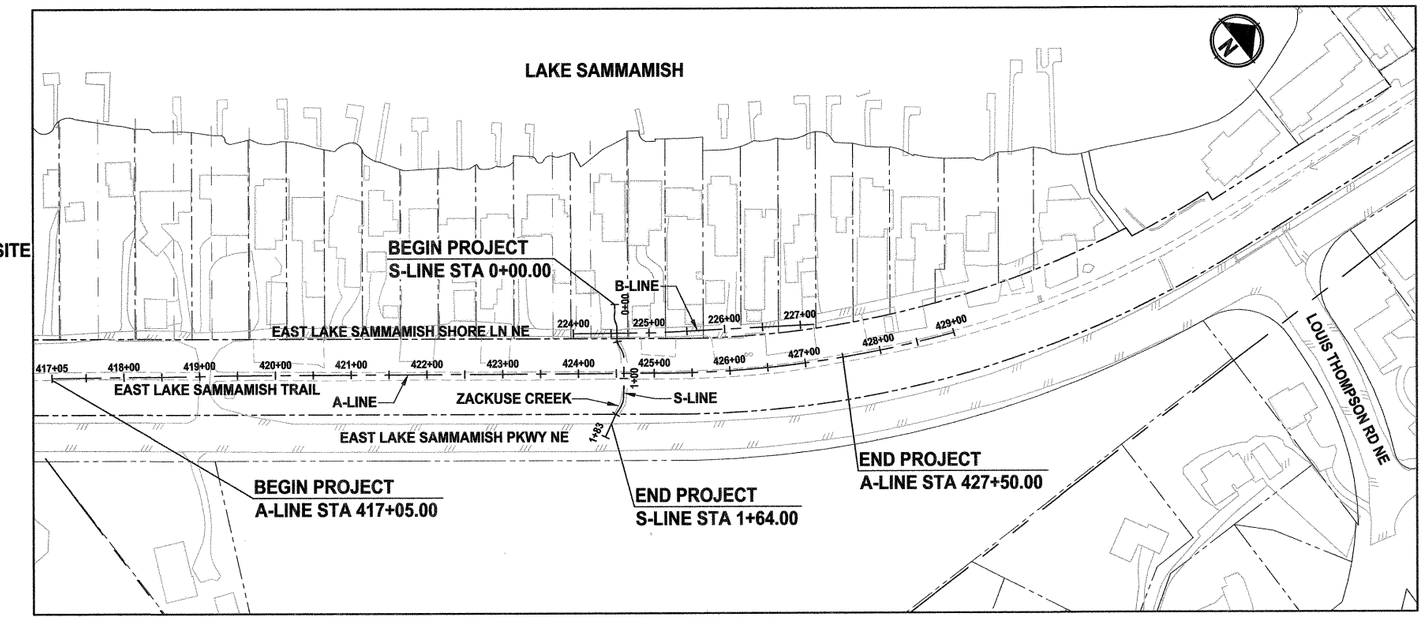

VICINITY MAP
SCALE: 1' = 100'

EXISTING ZONE CLASSIFICATION:

COMMUNITY FACILITIES CF-F

EXISTING SHORELINE ENVIRONMENT DESIGNATION:

CITY OF SAMMAMISH DESIGNATION: SHORELINE RESIDENTIAL

GENERAL PURPOSE OF THIS PROJECT:

TO REMOVE AND REPLACE FISH PASSAGE BARRIER CULVERTS AND RESTORE THE STREAM CHANNEL AT ELST AND SHORE LANE NE.

CONTACT INFORMATION:

APPLICANT:
KING COUNTY PARKS AND RECREATION DIVISION
201 S. JACKSON, 7TH FLR
SEATTLE, WA 98104
(206) 263-7283
CONTACT: GINA AULD

OWNER:
KING COUNTY PARKS AND RECREATION DIVISION

ENGINEER:
PARAMETRIX
719 2ND AVENUE
SUITE 200
SEATTLE, WA 98104
(206) 394-3700
CONTACT: CRAIG BUITRAGO, P.E.

UTILITY:
ONE-CALL 1 (800) 424-5555

SAMMAMISH PLATEAU WATER AND SEWER DISTRICT
OFFICE: (425) 392-6256
DIRECT: (425) 295-3228
CONTACT: JACKSON DOVE

PUGET SOUND ENERGY (GAS)
(425) 449-7410
CONTACT: JEANNE COLEMAN

PUGET SOUND ENERGY (POWER)
(425) 457-4542
CONTACT: JOSHUA GRENNER

SURVEYOR:
PARAMETRIX
719 2ND AVENUE
SUITE 200
SEATTLE, WA 98104
(206) 394-3700
CONTACT: DANIEL THIBODEAU

ARBORIST:
AMERICAN FOREST MANAGEMENT, INC
11415 NE 128TH ST SUITE 110
KIRKLAND, WA 98034
(425) 820-3420
CONTACT: BOB LAYTON

RIGHT OF WAY NOTE:

RIGHT OF WAY LINES SHOWN ARE BASED ON KING COUNTY MAP VAULT SURVEY OF EAST LAKE SAMMAMISH TRAIL, MAP NUMBER 311-99, DATED AUGUST 8TH, 1998, WITH SUBSEQUENT CONVEYANCES AND EASEMENTS BEING UPDATED ACCORDING TO AUDITOR DOCUMENTS OF RECORD.

PROPERTY INFORMATION:

PARCEL NUMBERS:
322506-9015 (13.79 ACRES)
173870-0085 (0.43 ACRES)
173870-0090 (0.31 ACRES)
173870-0110 (0.29 ACRES)
173870-0115 (0.29 ACRES)

PROJECT & SITE INFORMATION:

KING COUNTY PROPOSES FISH PASSAGE CULVERT REPLACEMENTS AND ASSOCIATED STREAM RESTORATION AS PART OF THE CRITICAL AREAS MITIGATION FOR THE EAST LAKE SAMMAMISH MASTER PLAN TRAIL PROJECT. LOCATED IN THE CITY OF SAMMAMISH APPROXIMATELY 1,000 FEET SOUTH OF INTERSECTION OF EAST LAKE SAMMAMISH PARKWAY NE AND LOUIS THOMPSON ROAD NE. A GRAVEL INTERIM TRAIL IS CURRENTLY IN OPERATION.

DISTURBED AREA = 0.95 AC
EXISTING IMPERVIOUS AREA = 0.63 AC
PROPOSED IMPERVIOUS AREA = 0.77 AC
VOLUME OF ESTIMATED FILL = 559 CY
VOLUME OF ESTIMATED EXCAVATION = 938 CY

N.I.C

WRITTEN DESCRIPTION OF THE PROJECT:

THE EXISTING STREAM CULVERTS AT THE TRAIL AND EAST LAKE SAMMAMISH SHORE LANE NE CROSSINGS WILL BE REMOVED AND REPLACED WITH CONCRETE BOX CULVERT. APPROXIMATELY 100 FEET OF EXISTING STREAM WILL BE RE-GRADED AND THE EXISTING GRAVEL TRAIL WILL BE WIDENED TO ACCOMMODATE CONSTRUCTION ACCESS AND TEMPORARY ACCESS TO PRIVATE PROPERTIES DURING CONSTRUCTION OF THE BOX CULVERTS.

THE PROPOSED IMPROVEMENTS INCLUDE PRECAST CONCRETE BOX CULVERTS AND ASSOCIATED WINGWALLS, STREAM GRADING, RELOCATING UNDERGROUND UTILITES AT THE EAST LAKE SAMMAMISH SHORE LANE NE CROSSING, ~~[illegible]~~ AND MITIGATION FOR IMPACTS TO ~~WETLANDS AND WETLAND AND~~ STREAM BUFFERS.

~~SCHEDULE B WORK INCLUDES ALL WORK WITHIN KING COUNTY PROPERTY BOUNDARY.~~ N.I.C

SCHEDULE C WORK INCLUDES WORK WEST OF KING COUNTY PROPERTY. THIS WORK IS LOCATED ON PRIVATE PROPERTY AND INCLUDES PRECAST CONCRETE BOX CULVERT AND ASSOCIATED WING WALLS AT EAST LAKE SAMMAMISH SHORE LANE NE AND UTILITY RELOCATIONS.

INDEX TO DRAWINGS

SHT NO.	DWG NO.	SHEET TITLE
1	G1	COVER SHEET
2	G2	ABBREVIATIONS AND LEGEND
3	SC1	SURVEY CONTROL AND RIGHT OF WAY
4	TA1	TEMPORARY TRAFFIC ACCESS
5	CS1	TYPICAL CROSS SECTIONS
6	SP1	SITE PREPARATION, TESC AND UTILITIES
7	SP2	SITE PREPARATION, TESC AND UTILITIES
8	SP3	TEMPORARY STREAM DIVERSION DETAILS
9	UT1	UTILITY PLAN
10	UT2	UTILITY PROFILES
~~11~~	~~AL1~~	~~PLAN AND PROFILE~~
~~12~~	~~AL2~~	~~PLAN AND PROFILE~~
~~13~~	~~AL3~~	~~PLAN AND PROFILE~~
14	AL4	PLAN AND PROFILE
15	AL5	PLAN AND PROFILE
16	ST1	STREAM AND CULVERT PLAN AND PROFILE
17	ST2	STREAM AND CULVERT DETAILS
18	ST3	STREAM AND CULVERT DETAILS
19	WP1	WING WALL PLAN AND PROFILE
20	PV1	ROADWAY PAVEMENT AND CHANNELIZATION PLAN
21	LA1	RESTORATION PLAN AND DETAILS
22	MD1	MISCELLANEOUS DETAILS
~~23~~	~~MD2~~	~~MISCELLANEOUS DETAILS~~

N.I.C.

CONTRACT NO. CO1281C18

REVISIONS	DATE	BY

DESIGNED C. BUITRAGO
DRAWN B. PURGANAN
CHECKED D. PROCTOR
APPROVED C. BUITRAGO

ONE INCH AT FULL SCALE. IF NOT, SCALE ACCORDINGLY
FILE NAME PS15210 75P23T14G-01
JOB No. 554-1521-075 P23 T14
DATE MAY 2018

CRAIG ALEXANDER BUITRAGO
STATE OF WASHINGTON
49427
REGISTERED PROFESSIONAL ENGINEER
5-4-2018

Parametrix
ENGINEERING . PLANNING . ENVIRONMENTAL SCIENCES
719 2ND AVENUE, SUITE 200 | SEATTLE, WA 98104
P 206.394.3700
WWW.PARAMETRIX.COM

PROJECT NAME
EAST LAKE SAMMAMISH
MASTER PLAN TRAIL
ZACKUSE CREEK CUVERT REPLACEMENTS
SAMMAMISH, WA

COVER SHEET

SHEET NO.
1 OF 23
G1

PATH: U:\PSO\Projects\Clients\1521-KingCo\554-1521-075-ELST\999vca\CADD\Phase 23\Task 14\DWG\ PLOTTED BY: purgabut DATE: Wednesday, May 2, 2018 4:49:53 PM
LAYOUT: G1

ABBREVIATIONS:

ACP	ASPHALT CONCRETE PAVEMENT
BOC	BACK OF CURB
BOW	BOTTOM OF WALL
BVCE	BEGIN VERTICAL CURVE ELEVATION
BVCS	BEGIN VERTICAL CURVE STATION
CB	CATCH BASIN
C&G	CURB AND GUTTER
C/L	CENTERLINE
CONC	CONCRETE
CONST	CONSTRUCTION
CMP	CORRUGATED METAL PIPE
CP	CONCRETE PIPE
CSBC	CRUSHED SURFACING BASE COURSE
DIA	DIAMETER
DI, DIP	DUCTILE IRON PIPE
E	EAST, EASTING
EOA	EDGE OF ASPHALT
EVCE	END VERTICAL CURB ELEVATION
EVCS	END VERTICAL CURB STATION
EOG	EDGE OF GRAVEL
EOP	EDGE OF PAVEMENT
EX, EXIST	EXISTING
FOC	FACE OF CURB
FL	FLANGE, FLOWLINE
FM	LOW PRESSURE SEWER MAIN
G	GAS
GB	GRADE BREAK
HMA	HOT MIX ASPHALT
IE	INVERT ELEVATION
LF	LINEAR FEET
LP	LOW POINT
LT	LEFT
ME	MATCH EXISTING
MIN	MINIMUM
MON	MONUMENT
N	NORTH, NORTHING
N.I.C.	NOT IN CONTRACT
NST	NOT STEEPER THAN
PC	POINT OF CURVE
PT	POINT OF TANGENT
P/L	PROPERTY LINE
PRCSBC	PRECAST REINFORCED CONCRETE SPLIT BOX CULVERT
PVI	POINT OF VERTICAL INTERSECTION
REINF	REINFORCED
ROW or R/W	RIGHT-OF-WAY
SD	STORM DRAIN
SDMH	STORMWATER MANHOLE
SIM	SIMILAR
SPWSD	SAMAMMISH PLATEAU WATER AND SEWER DISTRICT
ST	STEEL
STA	STATION
TEL	TELEPHONE
TESC	TEMPORARY EROSION AND SEDIMENT CONTROL
TOW	TOP OF WALL
TYP	TYPICAL
W	WATER
WS	WATER SERVICE
WWM	WELDED WIRE MESH

DETAIL AND SECTION DESIGNATION

1 / 4 — INDICATES DETAIL NUMBER; INDICATES DRAWING/SHEET WHERE DETAIL IS SHOWN

A / C2 — INDICATES SECTION LETTER; INDICATES DRAWING/SHEET WHERE SECTION IS SHOWN

2 / – — DETAIL OR SECTION APPEARS ON THE SAME DRAWING/SHEET

12345 STANDARD DETAIL

INDICATES DETAIL NUMBER

SUBTITLE
DETAIL 1
NO SCALE M4

INDICATES DRAWING/SHEET WHERE DETAIL IS REFERRED TO

INDICATES SECTION LETTER

SUBTITLE
SECTION A
NO SCALE C5

INDICATES DRAWING/SHEET WHERE SECTION IS REFERRED TO

LEGEND

DESCRIPTION	PROPOSED	EXISTING
RIGHT OF WAY		R/W
PROPERTY LINE		P/L
FOUND MONUMENTS		
REBAR & CAP		
HUB & TACK		
PK NAIL		
FOUND MAG NAIL		
SET MAG NAIL		
PROPERTY CORNER		
STREAM BUFFER		B
STREAM		
EDGE OF WATER		
ORDINARY HIGH WATER MARK		
FLOODWAY BOUNDARY		
DITCH		
JURISDICTIONAL DITCH CENTERLINE & EDGES		
WETLAND FLAG		
WETLAND BUFFER		
WETLAND SYMBOL		
WETLAND BOUNDARY		W
DECIDUOUS TREE		
CONIFEROUS TREE		
VEGETATION		
STORM DRAIN		SD
CULVERT/STORM DRAIN PIPE		
CATCH BASIN, TYPE 1		
CATCH BASIN, TYPE 2		
CATCH BASIN W/ SOLID LID		
SANITARY SEWER FORCE MAIN	FM	FM
SANITARY SEWER MANHOLE		
SANITARY SEWER VAULT		SS
CLEANOUT		CO
CONTOURS MAJOR	10	10
CONTOURS MINOR	2	2
BARBWIRE FENCE		X
SAWN LUMBER FENCE	//	//
BOARD FENCE		
CHAIN LINK FENCE		C
TEMPORARY SAFETY FENCE		
HOG WIRE FENCE		
METAL RAILING		
WOOD GUARDRAIL		
HIGH VISIBILITY SILT FENCE		
HIGH VISIBILITY FENCE		
CLEARING AND GRUBBING LIMITS	CG	CG
FILL LINE	F	F
CUT LINE	C	C
COFFERDAM		
WATTLE		
PUMP		
PLASTIC SHEETING		
FISH SCREEN		
TEMPORARY PUMP LINE	D	D

LEGEND

DESCRIPTION	PROPOSED	EXISTING
SAWCUT		
ASPHALT EDGE		
CONCRETE LINE		
CURB AND GUTTER		
EDGE OF PATCH		
EDGE OF GRAVEL		
PRECAST CONC WING WALL		
RIP RAP		
ROCKERY		
BUILDING LINE		
CONCRETE STAIR LINE		
WOOD STAIRWAY		
REMOVE ASPHALT		
CONSTRUCTION CENTERLINE	220+00 A-LINE	
GUY ANCHOR		
POWER POLE WITH LIGHT		
FLOOD LIGHT		
UTILITY POLE		
PP W/ UG DROP		
PP W/ UG DROP & XMFR		
OVERHEAD POWER		OP
POWER		P
POWER VAULT		P
POWER TRANSFORMER		
POWER MANHOLE		P
POWER HANDHOLE		
POWER CABINET		PWR CAB
POWER RISER		PR
POWER METER		
SOLID LID J-BOX		
LUMINAIRE		
TELEPHONE VAULT		T
TELEPHONE RISER		TR
TELEPHONE MANHOLE		T
TELEPHONE		T
TV RISER		
TV		TV
GAS VALVE		
GAS METER		
GAS		G
WATER LINE	W	W
FIRE HYDRANT		
WATER METER		
WATER VALVE		
AREA DRAIN		
ROOF DRAIN		
WATER BLOW OFF VALVE		
WATER POST INDICATOR		
IRRIGATION CONTROL VALVE		

LEGEND

DESCRIPTION	PROPOSED	EXISTING
TRAFFIC SIGNAL POLE W/ LAMP		
TRAFFIC SIGNAL POLE		
TRAFFIC CONTROL LOOP (SQ)		TL
TRAFFIC CONTROL CABINET		
PEDESTRIAN POLE		
MONITORING WELL		
SURFACE POST		
SIGN		
SKIP LANE LINE		
SOLID EDGE LINE		
FOG LINE		
LTO ARROW		
STO ARROW		
RTO ARROW		

PATH: U:\PSO\Projects\Clients\1521-KingCo\554-1521-075-ELST\99Svcs\CADD\Phase 23\Task 14\DWG\ PLOTTED BY: purgabut DATE: Friday, May 4, 2018 9:33:27 AM LAYOUT: G2

REVISIONS	DATE	BY

DESIGNED C. BUITRAGO
DRAWN B. PURGANAN
CHECKED D. PROCTOR
APPROVED C. BUITRAGO

ONE INCH AT FULL SCALE. IF NOT, SCALE ACCORDINGLY
FILE NAME PS1521075P23T14G-02
JOB No. 554-1521-075 P23 T14
DATE MAY 2018

CRAIG ALEXANDER BUITRAGO — STATE OF WASHINGTON — 49427 — REGISTERED PROFESSIONAL ENGINEER
5-4-2018

Parametrix
ENGINEERING . PLANNING . ENVIRONMENTAL SCIENCES
719 2ND AVENUE, SUITE 200 | SEATTLE, WA 98104
P 206.394.3700
WWW.PARAMETRIX.COM

PROJECT NAME
EAST LAKE SAMMAMISH
MASTER PLAN TRAIL
ZACKUSE CREEK CUVERT REPLACEMENTS
SAMMAMISH, WA

CONTRACT NO. CO1281C18

ABBREVIATIONS AND LEGEND

SHEET NO. 2 OF 23

G2

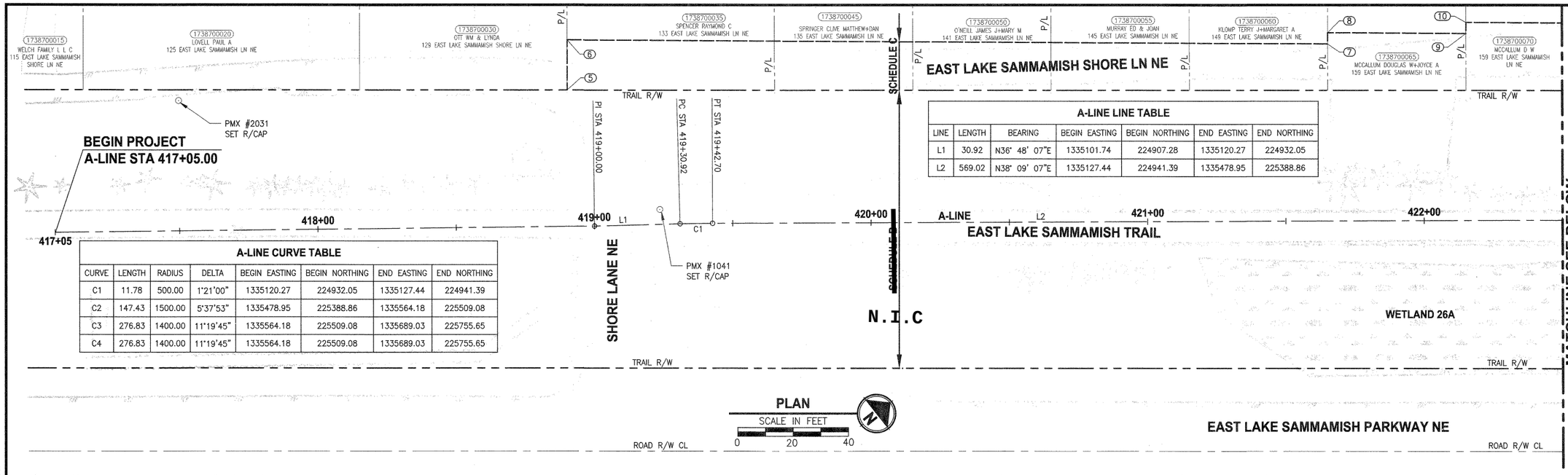

A-LINE LINE TABLE						
LINE	LENGTH	BEARING	BEGIN EASTING	BEGIN NORTHING	END EASTING	END NORTHING
L1	30.92	N36° 48' 07"E	1335101.74	224907.28	1335120.27	224932.05
L2	569.02	N38° 09' 07"E	1335127.44	224941.39	1335478.95	225388.86

A-LINE CURVE TABLE							
CURVE	LENGTH	RADIUS	DELTA	BEGIN EASTING	BEGIN NORTHING	END EASTING	END NORTHING
C1	11.78	500.00	1°21'00"	1335120.27	224932.05	1335127.44	224941.39
C2	147.43	1500.00	5°37'53"	1335478.95	225388.86	1335564.18	225509.08
C3	276.83	1400.00	11°19'45"	1335564.18	225509.08	1335689.03	225755.65
C4	276.83	1400.00	11°19'45"	1335564.18	225509.08	1335689.03	225755.65

TEMPORARY CONSTRUCTION EASEMENT POINT TABLE		
POINT #	NORTHING	EASTING
5	224929.90	1335057.20
6	224941.10	1335043.08
7	225155.82	1335214.86
8	225158.30	1335211.73
9	225197.34	1335242.96
10	225199.82	1335239.83
11	225277.91	1335302.30
12	225275.89	1335304.85
13	225334.80	1335351.43
14	225336.51	1335349.27
15	225367.86	1335374.10
16	225389.09	1335352.20
17	225415.17	1335370.75
18	225392.82	1335398.97
19	225415.55	1335416.97
20	225431.32	1335430.73
21	225433.97	1335427.39
22	225443.85	1335435.55
23	225473.41	1335458.27
24	225471.62	1335460.69
25	225511.31	1335489.95
26	225531.26	1335505.99
27	225551.81	1335518.63
28	225596.09	1335542.18
29	225583.60	1335557.98

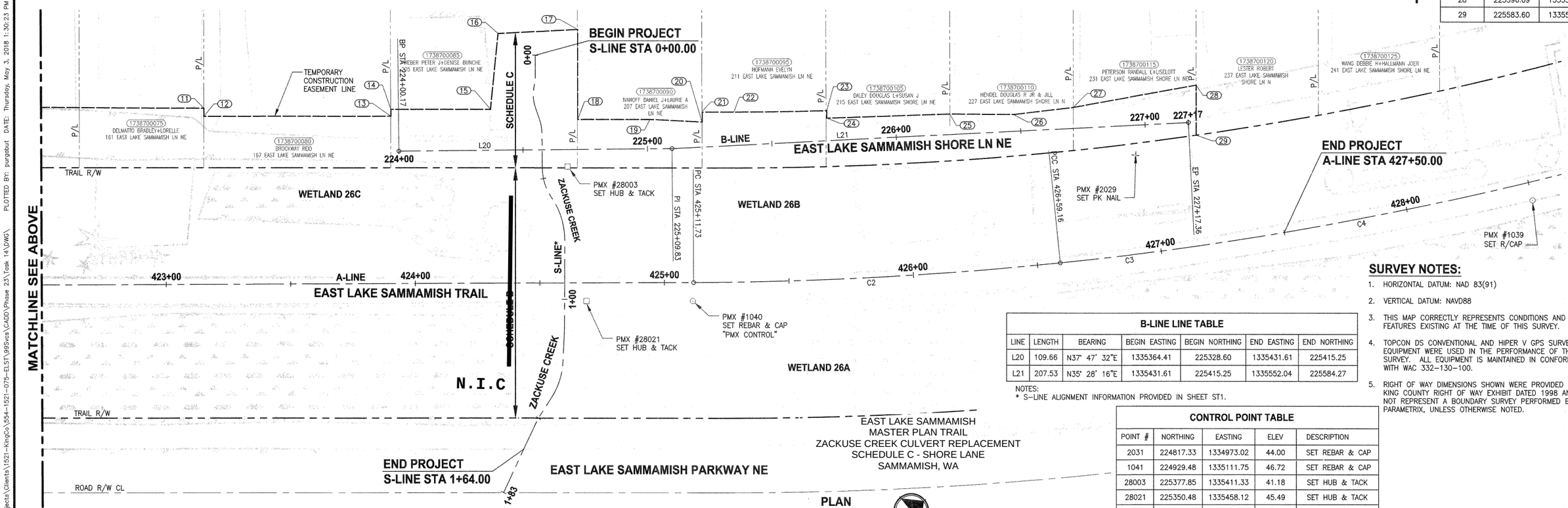

EAST LAKE SAMMAMISH
MASTER PLAN TRAIL
ZACKUSE CREEK CULVERT REPLACEMENT
SCHEDULE C - SHORE LANE
SAMMAMISH, WA

B-LINE LINE TABLE						
LINE	LENGTH	BEARING	BEGIN EASTING	BEGIN NORTHING	END EASTING	END NORTHING
L20	109.66	N37° 47' 32"E	1335364.41	225328.60	1335431.61	225415.25
L21	207.53	N35° 28' 16"E	1335431.61	225415.25	1335552.04	225584.27

NOTES:
* S-LINE ALIGNMENT INFORMATION PROVIDED IN SHEET ST1.

CONTROL POINT TABLE				
POINT #	NORTHING	EASTING	ELEV	DESCRIPTION
2031	224817.33	1334973.02	44.00	SET REBAR & CAP
1041	224929.48	1335111.75	46.72	SET REBAR & CAP
28003	225377.85	1335411.33	41.18	SET HUB & TACK
28021	225350.48	1335458.12	45.49	SET HUB & TACK
1040	225383.97	1335484.57	45.22	SET REBAR & CAP
2029	225559.48	1335549.18	40.28	SET PK NAIL
1039	225673.38	1335662.17	45.54	SET REBAR & CAP

SURVEY NOTES:

1. HORIZONTAL DATUM: NAD 83(91)
2. VERTICAL DATUM: NAVD88
3. THIS MAP CORRECTLY REPRESENTS CONDITIONS AND FEATURES EXISTING AT THE TIME OF THIS SURVEY.
4. TOPCON DS CONVENTIONAL AND HIPER V GPS SURVEY EQUIPMENT WERE USED IN THE PERFORMANCE OF THIS SURVEY. ALL EQUIPMENT IS MAINTAINED IN CONFORMANCE WITH WAC 332-130-100.
5. RIGHT OF WAY DIMENSIONS SHOWN WERE PROVIDED BY KING COUNTY RIGHT OF WAY EXHIBIT DATED 1998 AND DO NOT REPRESENT A BOUNDARY SURVEY PERFORMED BY PARAMETRIX, UNLESS OTHERWISE NOTED.

CONTRACT NO. CO1281C18

REVISIONS	DATE	BY

DESIGNED D. THIBODEAU
DRAWN B. PURGANAN
CHECKED D. PROCTOR
APPROVED C. BUITRAGO

ONE INCH AT FULL SCALE. IF NOT, SCALE ACCORDINGLY
FILE NAME PS1521075P23T14SC-01
JOB No. 554-1521-075 P23 T14
DATE MAY 2018

DANIEL A. THIBODEAU — STATE OF WASHINGTON — 51801 — REGISTERED PROFESSIONAL LAND SURVEYOR
5-3-2018

Parametrix
ENGINEERING . PLANNING . ENVIRONMENTAL SCIENCES
719 2ND AVENUE, SUITE 200 | SEATTLE, WA 98104
P 206.394.3700
WWW.PARAMETRIX.COM

PROJECT NAME
EAST LAKE SAMMAMISH
MASTER PLAN TRAIL
ZACKUSE CREEK CUVERT REPLACEMENTS
SAMMAMISH, WA

SURVEY CONTROL AND RIGHT OF WAY

SHEET NO. 3 OF 23
SC1

PATH: U:\PSO\Projects\Clients\1521-KingCo\554-1521-075-ELST\99Svcs\CADD\Phase 23\Task 14\DWG\ PLOTTED BY: purgabut DATE: Thursday, May 3, 2018 1:30:23 PM
LAYOUT: SC1

SUGGESTED CONSTRUCTION SEQUENCE:

N.I.C

1. ~~IT IS RECOMMENDED THAT THE CONTRACTOR BEGIN BY CLOSING THE TRAIL AND PERFORMING SITE PREPARATION, TESC AND OTHER WORK NECESSARY TO CONSTRUCT THE TEMPORARY ACCESS ROAD ON THE EXISTING TRAIL AND ESTABLISH THE CONNECTION TO EAST LAKE SAMMAMISH SHORE LANE NE (SHORE LANE). THIS WORK SHALL INCLUDE INSTALLATION OF THE OWNER FURNISHED PRECAST REINFORCED CONCRETE SPLIT BOX CULVERT (PRCSBC) NO. 2 AND ASSOCIATED WINGWALLS, AND STREAM GRADING. TEMPORARY ACCESS ROAD MUST BE COMPLETE PRIOR TO CLOSING SHORE LANE NE.~~

2. FISH EXCLUSION (BY OWNER) AND TEMPORARY STREAM DIVERSION SHALL BE COMPLETED BEFORE PERFORMING WORK TO INSTALL THE OWNER FURNISHED PRECAST REINFORCED CONCRETE SPLIT BOX CULVERTS AND ASSOCIATED WINGWALLS.

N.I.C

3. ~~CONTRACTOR SHALL NOTIFY KING COUNTY THREE (3) WEEKS BEFORE FULL ROAD CLOSURE OF SHORE LANE NE.~~

4. RELOCATE THE MAILBOX SUPPORT STRUCTURE BEFORE SHORE LANE ROAD CLOSURE AND TEMPORARY TRAFFIC ACCESS ROUTE IS IMPLEMENTED. THE CONTRACTOR SHALL NOTIFY THE UNITED STATES POSTAL SERVICE POSTMASTER (REDMOND, WA) 5 DAYS BEFORE RELOCATING MAILBOXES.

5. PERFORM SCHEDULE C WORK AT SHORE LN. ~~IMPLEMENT ROAD CLOSURE, CHANNELIZE AND TEMPORARY TAPERED CONES, SIGNS TO ISOLATE WORK ZONE AT SHORE LN, AND SHORT TRAFFIC CITY TEMPORARY ACCESS ROAD ON TRAIL.~~ N.I.C

6. CONTRACTOR SHALL PROVIDE TRAIL USER ACCESS DURING CLOSURE OF EAST LAKE SAMMAMISH PARKWAY (SCHEDULE A WORK). SEE CITY OF SAMMAMISH PLANS FOR DETAILS. THE CONTRACTOR SHALL PROVIDE FLAGGERS DURING CONSTRUCTION HOURS WHEN THE TRAIL IS OPEN TO TRAIL USERS, LOCAL VEHICLE TRAFFIC, AND CONSTRUCTION MACHINERY.

7. ~~AFTER SCHEDULE C WORK IS COMPLETED, AND SHORE LN IS OPEN TO LOCAL TRAFFIC, THEN THE CONTACTOR SHALL CLOSE THE TRAIL, AND PERFORM REMAINDER OF SCHEDULE B CONSTRUCTION WORK TO COMPLETE THE PROJECT.~~ N.I.C

8. ~~CONTRACTOR SHALL REMOVE FILL MATERIALS FOR THE TEMPORARY ACCESS RAMP, AND RESTORE THE IMPERVIOUS AREA WITH CRUSHED SURFACING BASE COURSE MATERIALS. FINISHED GRADE SHALL MATCH EXISTING GROUND ELEVATIONS.~~ N.I.C

9. PLANTING AND SEEDING SHALL BE PERFORMED ACCORDING TO THE RESTORATION PLAN AND DETAILS (LA SHEET).

CONSTRUCTION NOTES:

N.I.C

1. CONTRACTOR SHALL ONLY PERFORM IN-WATER CONSTRUCTION WORK WITHIN THE APPROVED FISH WINDOW, JULY 1 THROUGH SEPTEMBER 30.

2. CONTRACTOR SHALL MAINTAIN ACCESS TO EAST LAKE SAMMAMISH SHORE LANE NE PROPERTIES FOR RESIDENTS AND EMERGENCY VEHICLES THROUGHOUT CONSTRUCTION DURING WORKING AND NON-WORKING HOURS. THE CONTRACTOR SHALL CONSTRUCT THE TEMPORARY ACCESS ROAD FOR THIS PURPOSE. THE TEMPORARY ACCESS ROAD WILL BE USED FOR FOR PROPERTY ACCESS WHEN SHORE LANE NE IS CLOSED AT THE STREAM CROSSING DUE TO CONSTRUCTION ACTIVITIES.

3. ~~TEMPORARY ACCESS ROAD SHALL BE ACCORDING TO TYPICAL SECTION A, SHEET C01, AND A-LINE PROFILE AL SHEETS.~~

4. ~~TEMPORARY ACCESS RAMP SHALL BE CONSTRUCTED PER PLAN AND PROFILE A-A, THIS SHEET.~~

5. SEE SP SHEETS FOR STAGING AREAS AND CONSTRUCTION ENTRANCES.

6. ~~FLEXIBLE GUIDEPOST PER IN-STAGING SHALL BE 30 FEET OFF.~~

LEGEND:

- ACCESS ROUTE
- TEMPORARY ACCESS ROAD, SEE PROFILE A-A THIS SHEET
- FLAGGER
- TEMPORARY SIGN. SEE DETAIL 1 THIS SHEET.
- TYPE III BARRICADE. SEE APPENDIX B IN SPECIFICATIONS.
- FLEXIBLE GUIDEPOST. SEE SHEET CS1 FOR DETAILS.

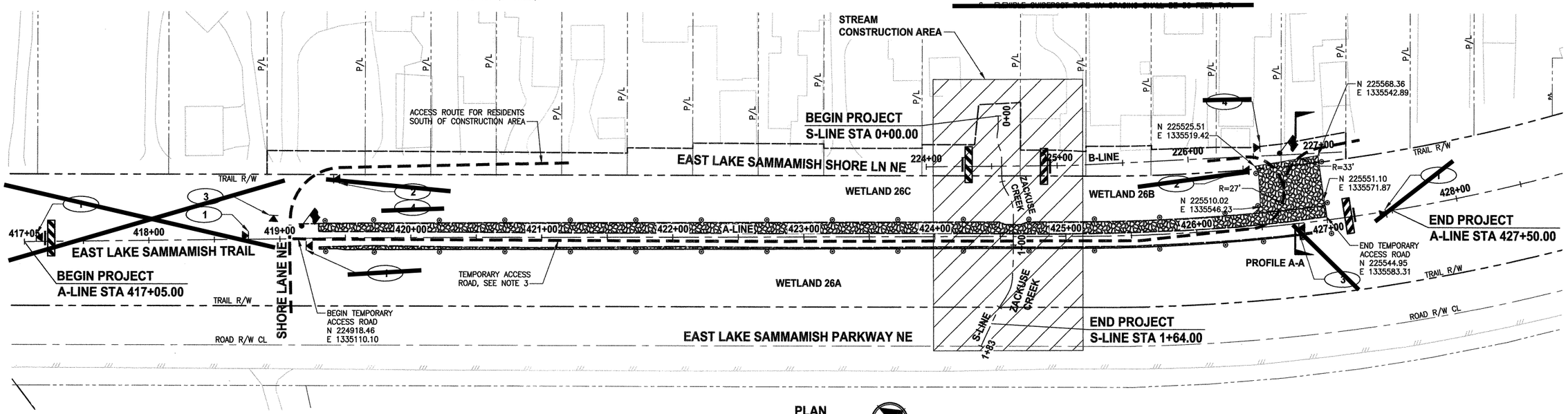

PLAN
SCALE IN FEET
0 40 80

N.I.C.

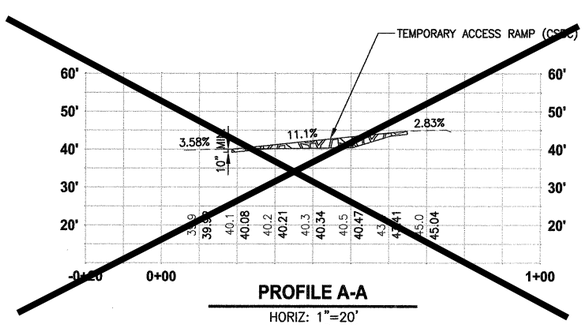

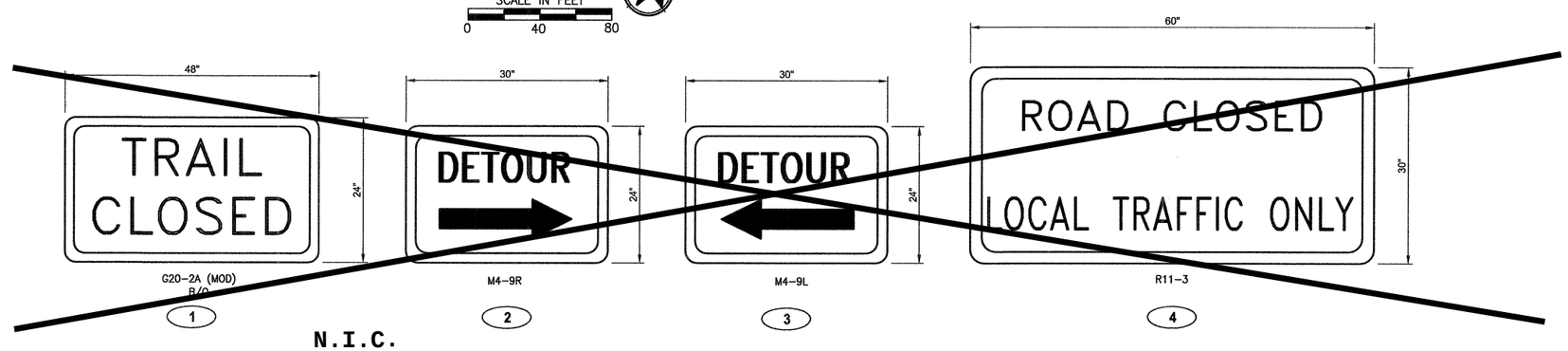

N.I.C.

CONTRACT NO. CO1281C18

REVISIONS	DATE	BY

DESIGNED M. TSUN
DRAWN B. PURGANAN
CHECKED D. PROCTOR
APPROVED C. BUITRAGO

ONE INCH AT FULL SCALE. IF NOT, SCALE ACCORDINGLY
FILE NAME PS1521075P23T14TA-01
JOB No. 554-1521-075 P23 T14
DATE MAY 2018

CRAIG ALEXANDER BUITRAGO, STATE OF WASHINGTON, 49427, REGISTERED PROFESSIONAL ENGINEER

Parametrix
ENGINEERING . PLANNING . ENVIRONMENTAL SCIENCES
719 2ND AVENUE, SUITE 200 | SEATTLE, WA 98104
P 206.394.3700
WWW.PARAMETRIX.COM

PROJECT NAME
EAST LAKE SAMMAMISH
MASTER PLAN TRAIL
ZACKUSE CREEK CUVERT REPLACEMENTS
SAMMAMISH, WA

TEMPORARY TRAFFIC ACCESS

SHEET NO. 4 OF 23
TA1

LAYOUT: TA1 PATH: U:\PSO\Projects\Clients\1521-KingCo\554-1521-075-ELST\995\ca\CADD\Phase 23\Task 14\DWG\ PLOTTED BY: purgabut DATE: Friday, May 4, 2018 9:36:08 AM

N.I.C

~~SCHEDULE B~~

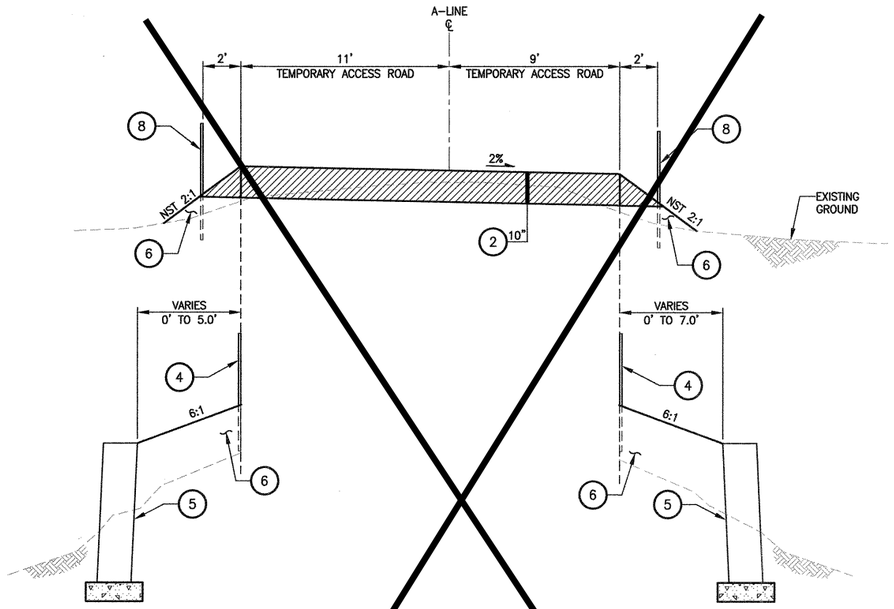

A-LINE STA 419+20 TO STA 426+84
TYPICAL SECTION (A)
NOT TO SCALE

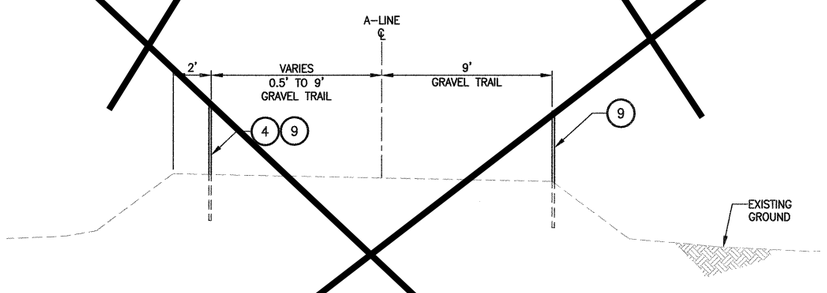

A-LINE STA 419+20 TO STA 426+84
TYPICAL SECTION (B)
NOT TO SCALE

SCHEDULE C

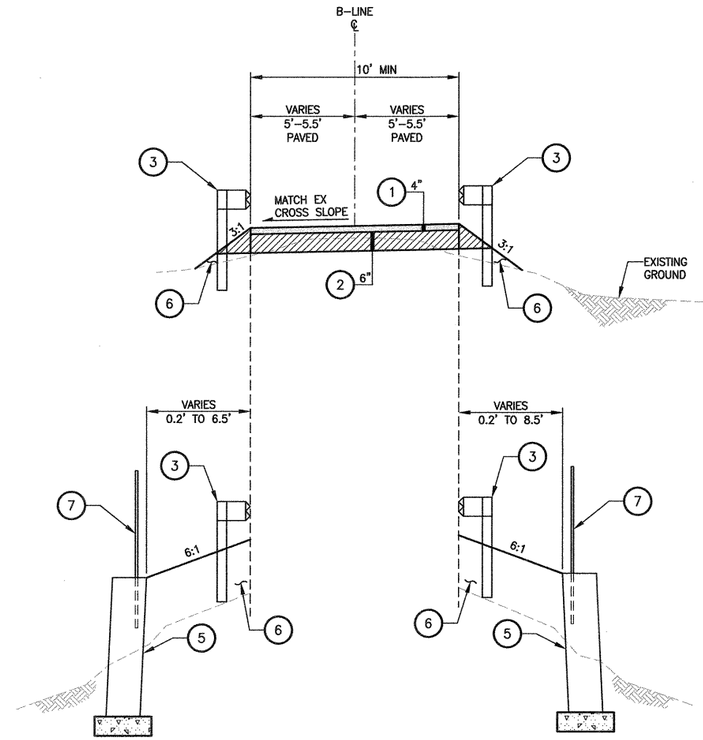

B-LINE STA 224+35 TO STA 224+84
TYPICAL SECTION (C)
NOT TO SCALE

CONSTRUCTION NOTES:

1. HMA CL. 1/2" PG 64-22.
2. CRUSHED SURFACING BASE COURSE.
3. GUARDRAIL, SEE AL SHEETS FOR LOCATIONS AND SEE DETAILS ON SHEET MD2.
4. ~~COATED CHAIN LINK FENCE TYPE 6. SEE AL PLANS FOR LOCATIONS AND SEE DETAILS ON SHEET MD1. INSTALL WITH INSTALLATION OF PRCSBC NO. 2, SEE DETAILS ON SHEET ST2.~~ N.I.C
5. WING WALL FOR PRECAST REINF. CONCRETE BOX CULVERT, SEE AL PLANS FOR LOCATIONS. SEE WP SHEETS FOR WALL PROFILES.
6. SELECT BORROW INCL. HAUL.
7. METAL RAILING, SEE AL SHEETS FOR LOCATION AND MD1 SHEET FOR DETAILS.
8. ~~FLEXIBLE GUIDEPOST TYPE WA. SEE WSDOT STANDARD PLAN M-40.10-03. CONTRACTOR SHALL REMOVE GUIDE POSTS AFTER SHORE LANE NE IS RE-OPENED TO TRAFFIC. SEE SPECIAL PROVISIONS. SEE SHEET TA1 FOR GUIDEPOST SPACING.~~ N.I.C
9. ~~SAWN LUMBER FENCE. SEE AL PLANS FOR LOCATIONS AND SEE DETAIL SHEET MD1. INSTALL FENCE AFTER SHORE LANE IS RE-OPENED TO TRAFFIC AND THE TRAIL IS CLOSED TO SHORE LANE NE HOME OWNER VEHICLES.~~

CONTRACT NO. CO1281C18

▷	REVISIONS	DATE	BY	DESIGNED M. TSUN
				DRAWN B. PURGANAN
				CHECKED D. PROCTOR
				APPROVED C. BUITRAGO

ONE INCH AT FULL SCALE. IF NOT, SCALE ACCORDINGLY
FILE NAME PS1521075P23T14CS-01
JOB No. 554-1521-075 P23 T14
DATE MAY 2018

CRAIG ALEXANDER BUITRAGO · STATE OF WASHINGTON · 49427 · REGISTERED PROFESSIONAL ENGINEER
5-4-2018

Parametrix
ENGINEERING . PLANNING . ENVIRONMENTAL SCIENCES
719 2ND AVENUE, SUITE 200 | SEATTLE, WA 98104
P 206.394.3700
WWW.PARAMETRIX.COM

PROJECT NAME
EAST LAKE SAMMAMISH
MASTER PLAN TRAIL
ZACKUSE CREEK CUVERT REPLACEMENTS
SAMMAMISH, WA

TYPICAL CROSS SECTIONS

SHEET NO. 5 OF 23
CS1

LAYOUT: CS1 PATH: U:\PSO\Projects\Clients\1521-KingCo\554-1521-075-ELST\99Svcs\CADD\Phase 23\Task 14\DWG\ PLOTTED BY: purgabut DATE: Wednesday, May 2, 2018 4:50:36 PM

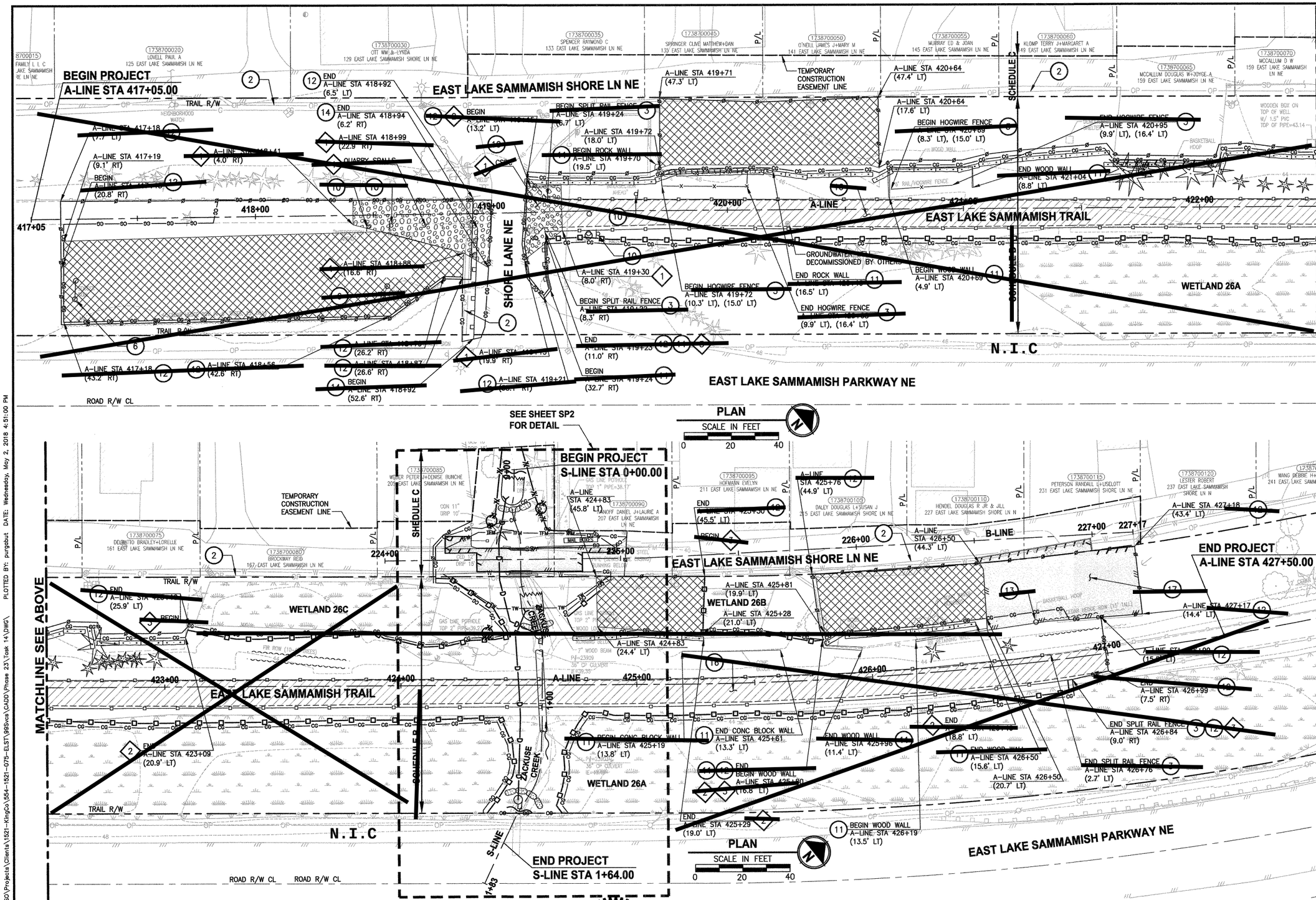

SITE PREPARATION NOTES:

2. PROTECT OVERHEAD POWER LINE.
3. REMOVE AND DISPOSE FENCE.
6. ~~REMOVE AND DISPOSE GOOSEN SCALE.~~
10. ~~REMOVE AND SALVAGE SIGN.~~
11. ~~REMOVE AND DISPOSE WALL.~~
12. ~~TEMPORARY CHAIN LINK SAFETY FENCE. SEE SPECIAL PROVISIONS SECTION 8-12.~~
13. ~~REMOVE AND DISPOSE BASKETBALL HOOP.~~
14. ~~REMOVE AND SALVAGE WOOD GUARDRAIL.~~
16. REMOVE EXISTING GRAVEL SURFACE PER ROADWAY EXCAVATION INCL. HAUL.
17. REMOVING ASPHALT CONC PAVEMENT. SEE SPECIAL PROVISIONS SECTION 2-02.

TESC NOTES:

1. STABILIZED CONSTRUCTION ENTRANCE, SEE SHEET MD2 FOR DETAILS.
2. WATTLE PER WSDOT STANDARD DETAIL I-30.30-01. INSTALL AT C & G LIMITS. LINES SHOWN ARE OFFSET FOR PLAN CLARITY PURPOSES.
3. HIGH VISIBILITY SILT FENCE WITH BACKUP SUPPORT PER WSDOT STANDARD DETAIL I-30.16-00. INSTALL AT C & G LIMITS. LINES SHOWN ARE OFFSET FOR PLAN CLARITY PURPOSES.

LEGEND:

- REMOVE EXISTING GRAVEL SURFACE
- REMOVING ASPHALT CONC PAVEMENT
- CONSTRUCTION STAGING AREA
- STABLIZED CONSTRUCTION ENTRANCE
- SAWCUT
- TEMPORARY SAFETY FENCE
- WATTLE
- HIGH VISIBILITY SILT FENCE
- HIGH VISIBILITY FENCE
- TEMPORARY PUMP LINE
- TEMPORARY BYPASS LOW PRESSURE SEWER MAIN
- TEMPORARY BYPASS WATER LINE
- COFFERDAM
- FISH SCREEN
- PUMP
- PLASTIC SHEETING

CONTRACT NO. CO1281C18

REVISIONS	DATE	BY

DESIGNED M. TSUN
DRAWN B. PURGANAN
CHECKED D. PROCTOR
APPROVED C. BUITRAGO

ONE INCH AT FULL SCALE. IF NOT, SCALE ACCORDINGLY
FILE NAME PS1521075P23T14SP-01
JOB No. 554-1521-075 P23 T14
DATE MAY 2018

CRAIG ALEXANDER BUITRAGO, STATE OF WASHINGTON, 49427, REGISTERED PROFESSIONAL ENGINEER
5-4-2018

Parametrix
ENGINEERING . PLANNING . ENVIRONMENTAL SCIENCES
719 2ND AVENUE, SUITE 200 | SEATTLE, WA 98104
P 206.394.3700
WWW.PARAMETRIX.COM

PROJECT NAME
EAST LAKE SAMMAMISH MASTER PLAN TRAIL
ZACKUSE CREEK CUVERT REPLACEMENTS
SAMMAMISH, WA

SITE PREPARATION, TESC AND UTILITIES

SHEET NO. 6 OF 23
SP1

LAYOUT: SP1 PATH: U:\PSO\Projects\Clients\1521-KingCo\554-1521-075-ELST\99Svcs\CADD\Phase 23\Task 14\DWG\ PLOTTED BY: purgabut DATE: Wednesday, May 2, 2018 4:51:00 PM

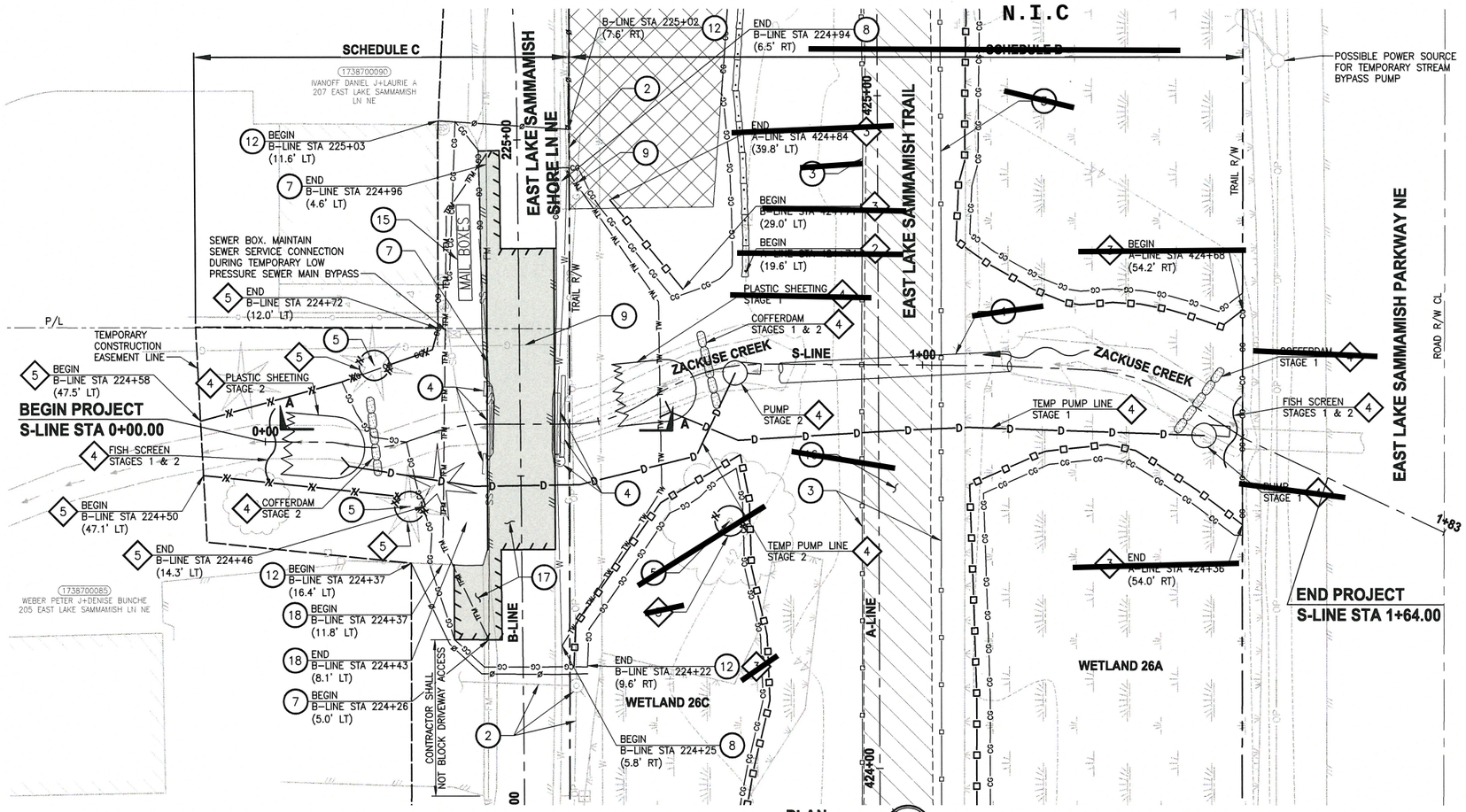

PLAN

SCALE IN FEET
0 10 20

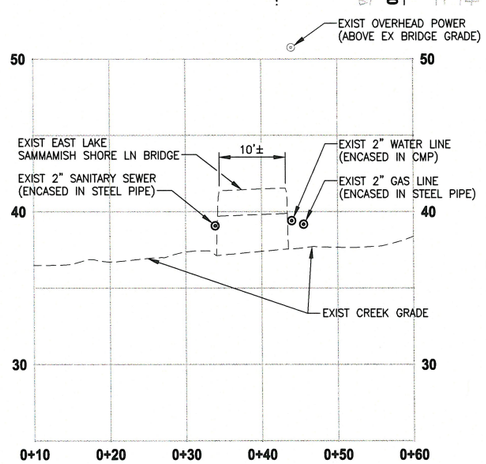

SECTION A-A

HORIZ: 1"=10'
VERT: 1"=5'

CONSTRUCTION SEQUENCING:

1. SEE CONSTRUCTION SEQUENCING ON SHEET TA1.

CONTACT INFORMATION:

SAMMAMISH PLATEAU WATER AND SEWER DISTRICT
OFFICE: (425) 392-6256
DIRECT: (425) 295-3228
CONTACT: JACKSON DOVE

PUGET SOUND ENERGY (GAS)
(425) 449-7410
CONTACT: JEANNE COLEMAN

PUGET SOUND ENERGY (POWER)
(425) 457-4542
CONTACT: JOSHUA GRENNER

UTILITY TEMPORARY BYPASS NOTES:

1. CONTRACTOR SHALL SUBMIT THE METHOD AND LOCATION OF THE TEMPORARY BYPASS PLAN FOR THE TEMPORARY WATER LINE AND TEMPORARY LOW PRESSURE SEWER MAIN TO THE SAMMAMISH PLATEAU WATER AND SEWER DISTRICT FOR REVIEW AND APPROVAL WITHIN 3 WEEKS OF NOTICE TO PROCEED. THE TEMPORARY BYPASS LINES SHOWN IN THE PLAN ARE SUGGESTED ONLY.
2. TEMPORARY BYPASS FOR WATER LINE AND LOW PRESSURE SEWER MAIN SHALL BE COMPLETED BEFORE WORK AT SHORE LANE NE MAY BEGIN.
3. TEMPORARY BYPASS PIPES MAY BE ABOVE GROUND. PIPE SHALL BE PROTECTED FROM UV DAMAGE AND FROM PHYSICAL DAMAGE.
4. CONTRACTOR SHALL INSTALL 2" GATE VALVE AT THE PROPOSED SOUTH CONNECTION OF THE LOCATED WATER LINE AND LOW PRESSURE SEWER MAIN WITH THE CORRESPONDING EXISTING LINE. EACH GATE VALVE SHALL BE USED FOR CONNECTION OF THE RESPECTIVE TEMPORARY BYPASS PIPE FOR LOW PRESSURE SEWER MAIN AND WATER LINE.
5. CONTRACTOR SHALL MAINTAIN EXISTING WATER AND SEWER SERVICE CONNECTIONS FOR ADJACENT PROPERTIES DURING TEMPORARY BYPASS OF WATER LINE AND LOW PRESSURE SEWER MAIN.
6. CONTRACTOR SHALL NOTIFY KING COUNTY 2 WEEKS PRIOR TO START OF BYPASS WORK.
7. SERVICE TO ADJACENT PROPERTIES SHALL NOT BE INTERRUPTED FOR MORE THAN 4 HOURS.

TEMPORARY STREAM DIVERSION NOTES:

1. FISH EXCLUSION AND FISH REMOVAL SHALL BE PERFORMED BY OWNER BEFORE IN-WATER WORK IN ACCORDANCE WITH THE WASHINGTON DEPARTMENT OF FISH AND WILDLIFE HPA.
2. CONTRACTOR SHALL SUBMIT THE TEMPORARY STREAM DIVERSION PLAN TO THE ENGINEER FOR REVIEW AND APPROVAL WITHIN 7 DAYS OF NOTICE TO PROCEED. THE TEMPORARY DIVERSION SHOWN IN THE PLAN IS SUGGESTED ONLY. THE TWO STAGES OF STREAM DIVERSION INDICATE THE DESIRE TO REUSE THE SAME MATERIALS FOR STREAM DIVERSION PER CONSTRUCTION SEQUENCING DESCRIBED IN SEE SHEET TA1.
3. CONTRACTOR SHALL COORDINATE TEMPORARY STREAM DIVERSION WITH THE STREAM BYPASS SYSTEM IMPLEMENTED BY THE CITY OF SAMMAMISH CONTRACTOR COMPLETING CULVERT REPLACEMENT AT THE EAST LAKE SAMMAMISH PARKWAY.
4. THE TEMPORARY STREAM DIVERSION SHALL BE INSPECTED DAILY BY THE CONTRACTOR AND MAINTAINED TO ENSURE CONTINUED PROPER FUNCTIONING.
5. PUMP SHALL BE SIZED FOR MINIMUM STREAM FLOWS LESS THAN 5 CFS. ANTICIPATED PEAK FLOW RATES DURING THE PERIOD OF CONSTRUCTION COULD BE AS HIGH AS 20 CFS. CONTRACTOR SHALL BE PREPARED TO PROTECT WORK SITE AND ADJACENT PROPERTIES DURING HIGHER FLOWS.
6. TEMPORARY STREAM DIVERSION PUMP WILL REQUIRE GENERATOR AND POWER. CONTRACTOR SHALL CONSIDER CONTACTING PUGET SOUND ENERGY AND ESTABLISHING A TEMPORARY POWER TAP FROM THE NEAREST POWER POLE.

N.I.C

SITE PREPARATION NOTES:

1. REMOVING CULVERT PIPE PER STRUCTURE EXCAVATION CLASS A INCL. HAUL.
2. PROTECT OVERHEAD POWER LINE.
3. REMOVE AND DISPOSE FENCE.
4. REMOVING EXISTING BRIDGE PER STRUCTURE EXCAVATION CLASS A INCL. HAUL.
5. PRESERVE AND MONITOR TREE. IF TREE REMOVAL IS DEEMED NECESSARY BY THE ENGINEER AND ARBORIST, APPROVAL FROM THE CITY IS REQUIRED.
7. RELOCATE LOW PRESSURE SEWER MAIN. INSTALL TEMPORARY BYPASS. SEE SPECIAL PROVISIONS SECTION 7-17.
8. RELOCATE WATER LINE. INSTALL TEMPORARY BYPASS. SEE SPECIAL PROVISION SECTION 7-09.
9. PROTECT GAS LINE. RELOCATION BY OTHERS PRIOR TO CONTRACT WORK, CONTRACTOR TO COORDINATE GAS LINE LOCATION WITH PSE.
12. TEMPORARY CHAIN LINK SAFETY FENCE. SEE SPECIAL PROVISIONS SECTION 8-12.
15. REMOVE AND RELOCATE MAILBOX SUPPORT STRUCTURE. SEE SHEET AL5 FOR NEW LOCATION. SEE SPECIAL PROVISIONS SECTION 8-18.
16. REMOVE EXISTING GRAVEL SURFACE PER ROADWAY EXCAVATION INCL. HAUL.
17. REMOVING ASPHALT CONC PAVEMENT. SEE SPECIAL PROVISIONS SECTION 2-02.
18. REMOVE AND SALVAGE IRON FENCE. SEE SPECIAL PROVISIONS SECTION 2-02.

TESC NOTES:

1. STABILIZED CONSTRUCTION ENTRANCE. SEE SHEET MD2 FOR DETAILS.
2. WATTLE PER WSDOT STANDARD DETAIL I-30.30-01. INSTALL AT C & G LIMITS. LINES SHOWN ARE OFFSET FOR PLAN CLARITY PURPOSES.
3. HIGH VISIBILITY SILT FENCE WITH BACKUP SUPPORT PER WSDOT STANDARD DETAIL I-30.16-00. INSTALL AT C & G LIMITS. LINES SHOWN ARE OFFSET FOR PLAN CLARITY PURPOSES.
4. TEMPORARY STREAM DIVERSION. SEE SHEET SP3 FOR DETAILS. SEE SPECIAL PROVISIONS SECTION 7-06.
5. HIGH VISIBILTY FENCE PER WSDOT STD DETAIL I-10.10-01. INSTALL AROUND TREE FOR PROTECTION.

LEGEND:

- REMOVE EXISTING GRAVEL SURFACE
- REMOVING ASPHALT CONC PAVEMENT
- CONSTRUCTION STAGING AREA
- STABLIZED CONSTRUCTION ENTRANCE
- SAWCUT
- TEMPORARY SAFETY FENCE
- WATTLE
- HIGH VISIBILITY SILT FENCE
- HIGH VISIBILITY FENCE
- TEMPORARY BYPASS LOW PRESSURE SEWER MAIN
- TEMPORARY BYPASS WATER LINE
- TEMPORARY PUMP LINE
- COFFERDAM
- FISH SCREEN
- PUMP
- PLASTIC SHEETING

CONTRACT NO. CO1281C18

REVISIONS	DATE	BY

DESIGNED M. TSUN
DRAWN B. PURGANAN
CHECKED D. PROCTOR
APPROVED C. BUITRAGO

ONE INCH AT FULL SCALE. IF NOT, SCALE ACCORDINGLY
FILE NAME PS1521075P23T14SP-02
JOB No. 554-1521-075 P23 T14
DATE MAY 2018

CRAIG ALEXANDER BUITRAGO, STATE OF WASHINGTON, 49427, REGISTERED PROFESSIONAL ENGINEER
5-9-2018

Parametrix
ENGINEERING . PLANNING . ENVIRONMENTAL SCIENCES
719 2ND AVENUE, SUITE 200 | SEATTLE, WA 98104
P 206.394.3700
WWW.PARAMETRIX.COM

PROJECT NAME
EAST LAKE SAMMAMISH
MASTER PLAN TRAIL
ZACKUSE CREEK CUVERT REPLACEMENTS
SAMMAMISH, WA

SITE PREPARATION, TESC AND UTILITIES

SHEET NO. 7 OF 23
SP2

PATH: U:\PSO\Projects\Clients\521-KingCo\554-1521-075-ELST\99Svcs\CADD\Phase 23\Task 14\DWG\ PLOTTED BY: purgabut DATE: Wednesday, May 9, 2018 3:48:57 PM LAYOUT: SP2

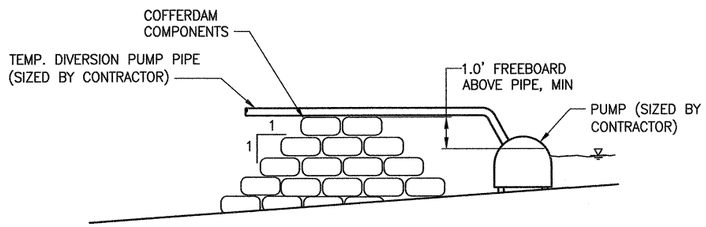

COFFERDAM NOTES:

1. COFFERDAMS SHALL BE CONSTRUCTED BY THE CONTRACTOR WITH WASHED DRAIN ROCK GRAVEL BAGS PER WSDOT STD. SPEC 9-03.12(4) OR OTHER MEANS PRE-APPROVED BY THE ENGINEER. GRAVEL BAGS SHALL BE CONSTRUCTED OF WOVEN SYNTHETIC FIBER.
2. THE HEIGHT AND WIDTH OF THE COFFERDAMS SHALL BE DETERMINED BY THE CONTRACTOR BASED ON THE WATER SURFACE ELEVATION AND CHANNEL SHAPE AT THE TIME OF CONSTRUCTION.
3. REMOVE LOOSE COBBLE AND BOULDERS FROM THE STREAMBED BEFORE PLACING COFFERDAM COMPONENTS.
4. EXTEND THE COFFERDAM ENDS UP THE BANKS OF THE CHANNEL AS NEEDED TO PREVENT EROSION FROM OCCURRING AROUND THE ENDS OF THE COFFERDAM.
5. COFFERDAM MATERIALS SHALL BE REMOVED FROM THE SITE AND BECOME THE PROPERTY OF THE CONTRACTOR.

COFFERDAM DETAIL (1)

NOT TO SCALE

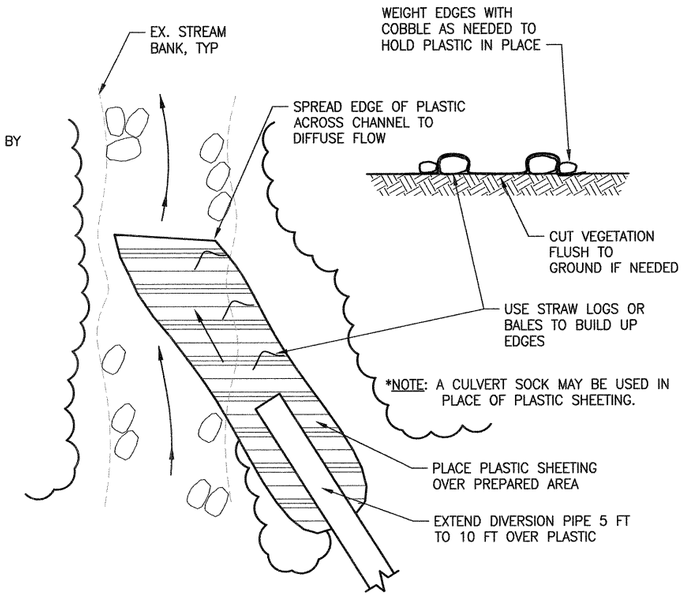

PLASTIC SHEET DIVERSION DETAIL (2)

NOT TO SCALE

CONTRACT NO. CO1281C18

REVISIONS	DATE	BY

DESIGNED M. TSUN
DRAWN B. PURGANAN
CHECKED D. PROCTOR
APPROVED C. BUTTRAGO

ONE INCH AT FULL SCALE. IF NOT, SCALE ACCORDINGLY

FILE NAME PS1521075P23T14SP-02
JOB No. 554-1521-075 P23 T14
DATE MAY 2018

CRAIG ALEXANDER BUTTRAGO — STATE OF WASHINGTON — 49427 — REGISTERED PROFESSIONAL ENGINEER
5-4-2018

Parametrix
ENGINEERING . PLANNING . ENVIRONMENTAL SCIENCES
719 2ND AVENUE, SUITE 200 | SEATTLE, WA 98104
P 206.394.3700
WWW.PARAMETRIX.COM

PROJECT NAME
EAST LAKE SAMMAMISH MASTER PLAN TRAIL
ZACKUSE CREEK CUVERT REPLACEMENTS
SAMMAMISH, WA

TEMPORARY STREAM DIVERSION DETAILS

SHEET NO. 8 OF 23

SP3

LAYOUT: SP3 PATH: U:\PSO\Projects\Clients\1521-KingCo\554-1521-075-ELST\99Svcs\CADD\Phase 23\Task 14\DWG\ PLOTTED BY: purgabut DATE: Wednesday, May 2, 2018 4:51:25 PM

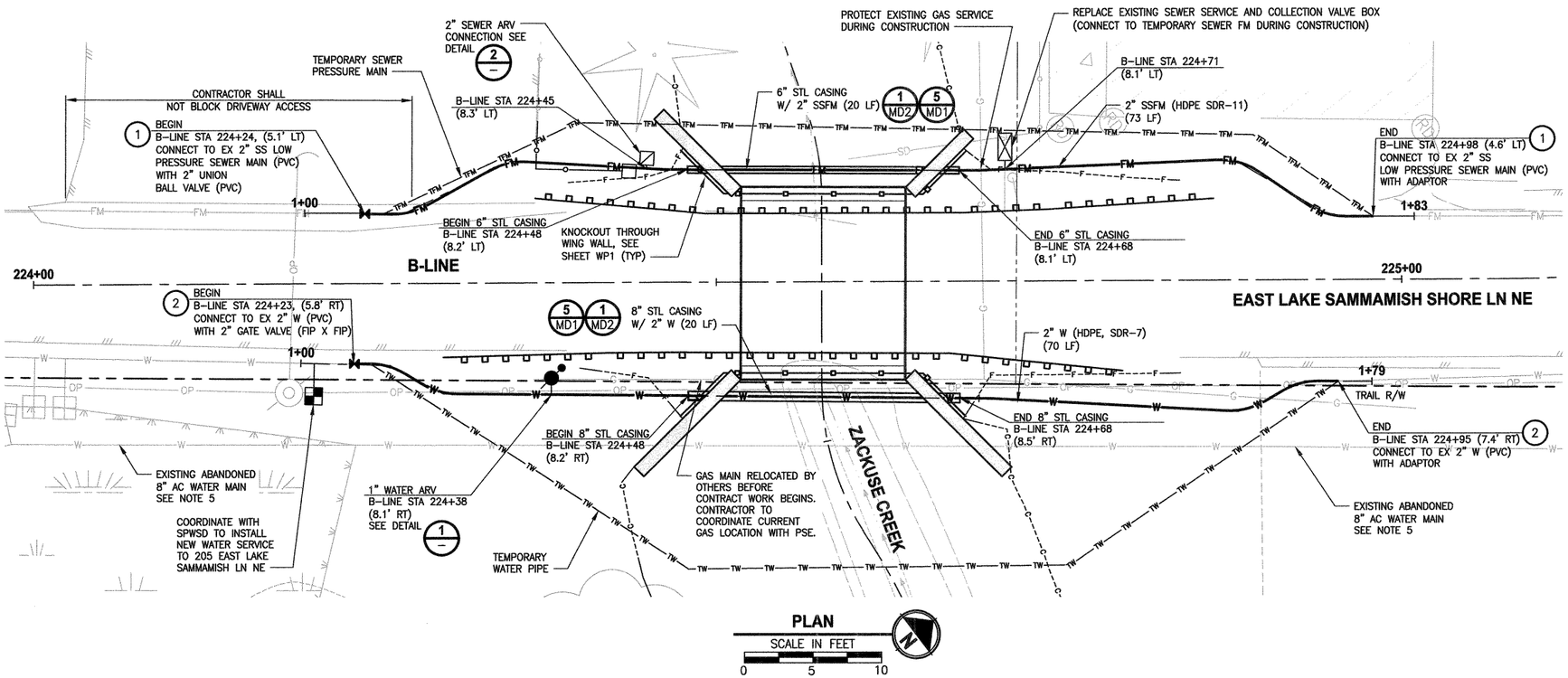

CONSTRUCTION NOTES:

1. RELOCATE LOW PRESSURE SEWER MAIN PER SPECIAL PROVISIONS SECTION 7-17.
2. RELOCATE WATER LINE PER SPECIAL PROVISIONS SECTION 7-09.

GENERAL NOTES:

1. CONTRACTOR SHALL CONTACT SAMMAMISH PLATEAU WATER AND SEWER DISTRICT (SPWSD) PRIOR TO WORK ON WATER OR LOW PRESSURE SEWER MAIN. CONTRACTOR SHALL SUBMIT TEMPORARY BYPASS PLANS FOR WATER AND SEWER WITHIN 3 WEEKS OF NOTICE TO PROCEED. CONTRACTOR SHALL CONTACT SPWSD 7 DAYS BEFORE PERFORMING WORK ON WATER LINE AND LOW PRESSURE SEWER MAIN.
2. ALL WORK ON WATER LINE AND LOW PRESSURE SEWER MAIN SHALL MEET THE STANDARDS OF THE SPWSD TECHNICAL SPECIFICATIONS (SEE APPENDIX B), AND NO WORK WILL BE ALLOWED WITHOUT APPROVAL FROM THE SPWSD ENGINEER.
3. LOW PRESSURE SEWER MAIN PIPE TRENCH SHALL BE IN ACCORDANCE WITH SAMMAMISH PLATEAU WATER STANDARD SEWER DETAILS – SANITARY SEWER TRENCH SECTION PROVIDED IN APPENDIX B.
4. WATER LINE PIPE TRENCH SHALL BE IN ACCORDANCE WITH SAMMAMISH PLATEAU WATER STANDARD WATER DETAILS – WATER MAIN TRENCH SECTION PROVIDED IN APPENDIX B.
5. CONTRACTOR SHALL POTHOLE AND VERIFY DEPTH OF EXISTING UTILITIES AT CONNECTION POINTS PRIOR TO CONSTRUCTION.
6. THE APPROXIMATE LOCATION OF THE EXISTING ABANDONED 8" AC WATER MAIN IS SHOWN IN THE PLANS. IF ENCOUNTERED DURING CONSTRUCTION, THE CONTRACTOR SHALL REMOVE EXISTING AC WATER MAIN PER SPECIAL PROVISIONS SECTION 2-02.

CONTACT INFORMATION:

SAMMAMISH PLATEAU WATER AND SEWER DISTRICT
OFFICE: (425) 392-6256
DIRECT: (425) 295-3228
CONTACT: JACKSON DOVE

PUGET SOUND ENERGY (GAS)
(425) 449-7410
CONTACT: JEANNE COLEMAN

PUGET SOUND ENERGY (POWER)
(425) 458-4542
CONTACT: JOSHUA GRENNER

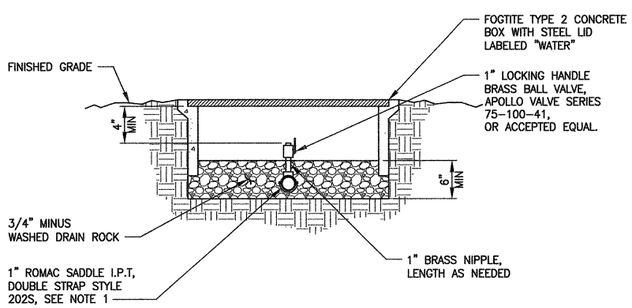

NOTE:

1. LOCATION OF THE AIR RELEASE VALVE ASSEMBLY AS SHOWN ON THE PLANS IS APPROXIMATE, LOCATE AT HIGH POINT ON THE WATER MAIN.

1" WATER AIR RELEASE VALVE ASSEMBLY
DETAIL 1
NOT TO SCALE

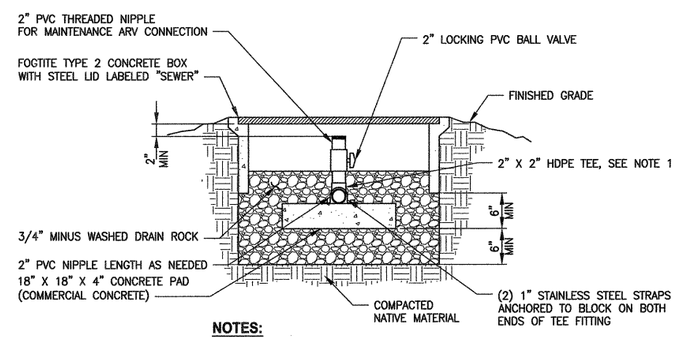

NOTES:

1. LOCATION OF THE AIR RELEASE VALVE ASSEMBLY AS SHOWN ON THE PLANS IS APPROXIMATE, LOCATE AT THE HIGH POINT ON THE LOW PRESSURE SEWER MAIN.
2. ALL PVC SHALL BE SCHEDULE 80.

2" SEWER AIR RELEASE VALVE ASSEMBLY
DETAIL 2
NOT TO SCALE

CONTRACT NO. CO1281C18

REVISIONS	DATE	BY

DESIGNED M. MILLER
DRAWN C. JOHNSON
CHECKED D. PROCTOR
APPROVED C. BUTRAGO

ONE INCH AT FULL SCALE. IF NOT, SCALE ACCORDINGLY
FILE NAME PS1521075P23T14UT-01
JOB No. 554-1521-075 P23 T14
DATE MAY 2018

CRAIG ALEXANDER BUTRAGO, STATE OF WASHINGTON, 49427, REGISTERED PROFESSIONAL ENGINEER
5-4-2018

Parametrix
ENGINEERING . PLANNING . ENVIRONMENTAL SCIENCES
719 2ND AVENUE, SUITE 200 | SEATTLE, WA 98104
P 206.394.3700
WWW.PARAMETRIX.COM

PROJECT NAME
EAST LAKE SAMMAMISH MASTER PLAN TRAIL ZACKUSE CREEK CUVERT REPLACEMENTS
SAMMAMISH, WA

UTILITY PLAN

SHEET NO. 9 OF 23
UT1

PATH: U:\PSO\Projects\Clients\1521-KingCo\554-1521-075-ELST\99Svcs\CADD\Phase 23\Task 14\DWG\ PLOTTED BY: purgabut DATE: Wednesday, May 2, 2018 4:51:55 PM
LAYOUT: UT1

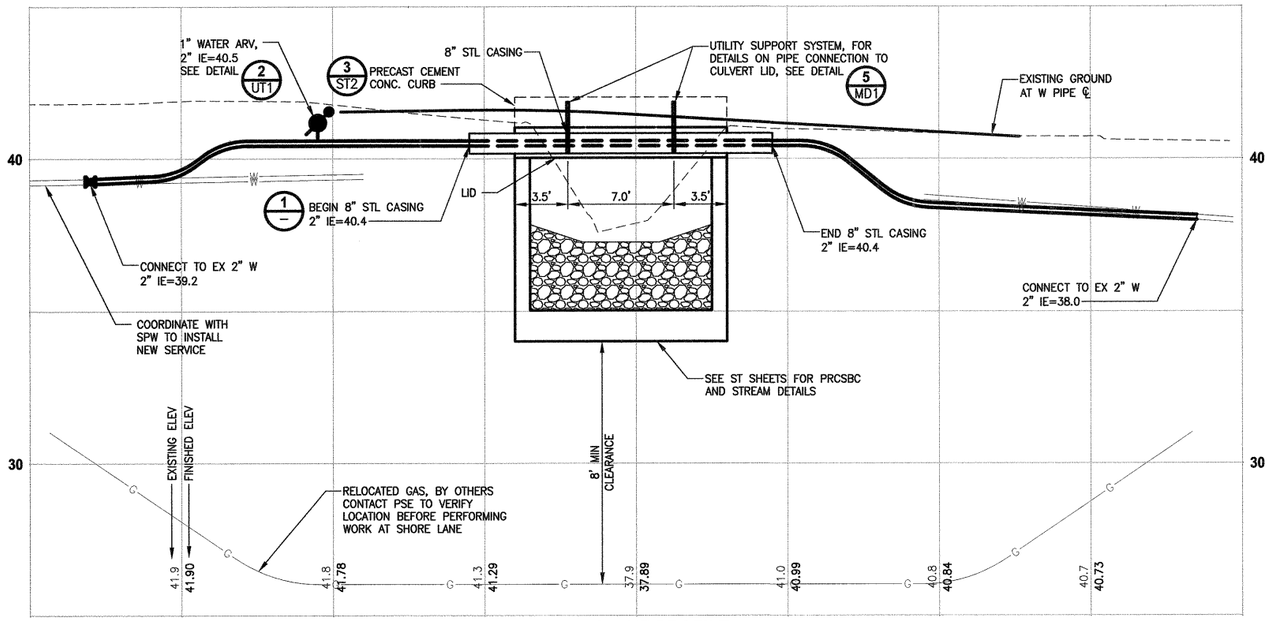

WATER LINE PROFILE

HORIZ: 1"=5'
VERT: 1"=2.5'

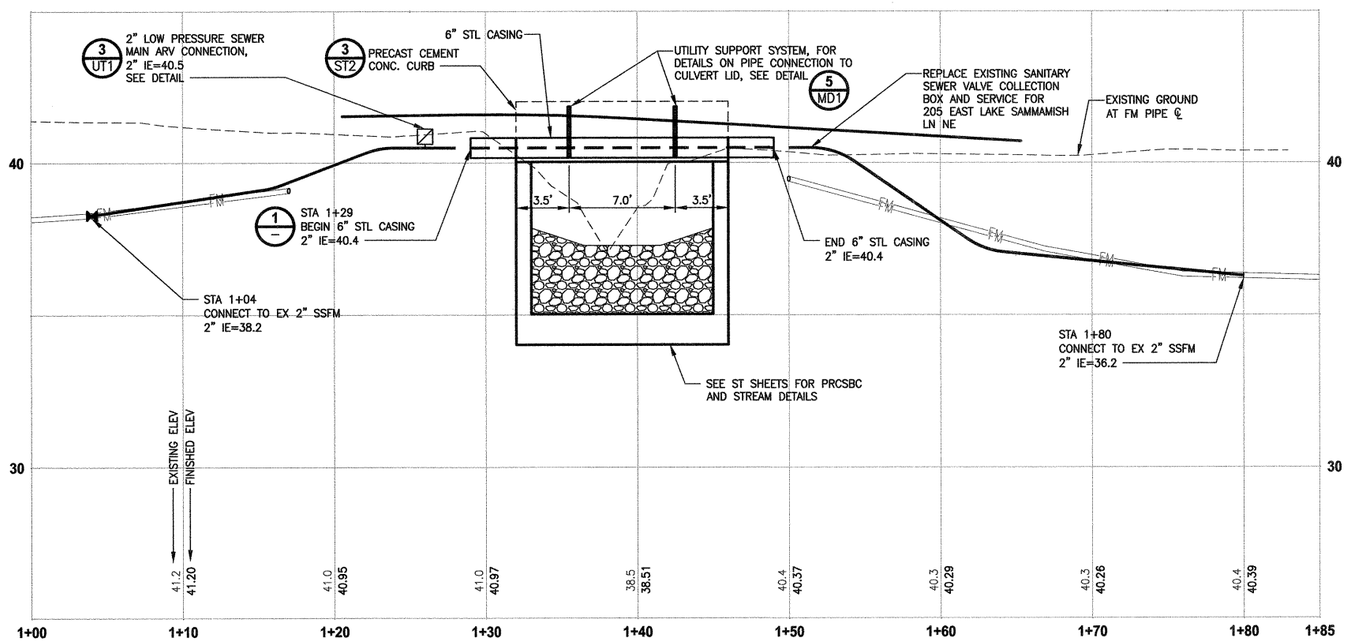

SEWER LINE PROFILE

HORIZ: 1"=5'
VERT: 1"=2.5'

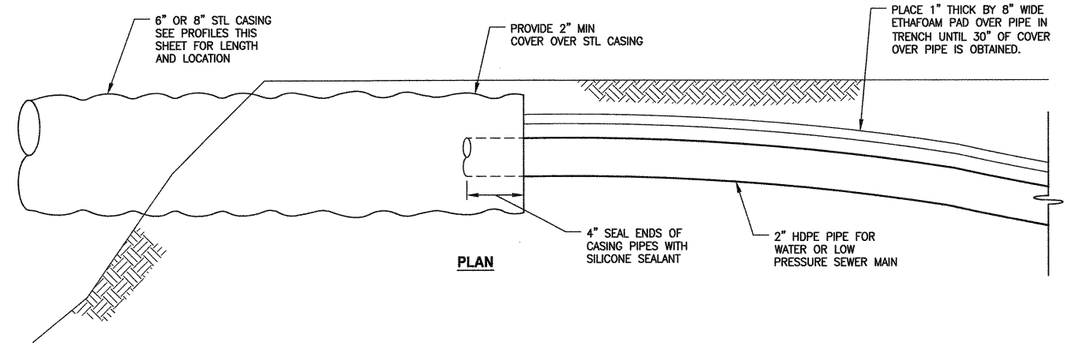

PLAN

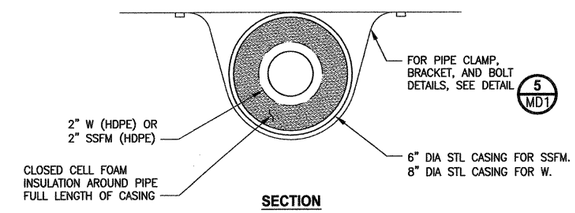

SECTION

UTILITY CASING DETAIL 1 –

NOT TO SCALE

CONTACT INFORMATION:

SAMMAMISH PLATEAU WATER AND SEWER DISTRICT
OFFICE: (425) 392-6256
DIRECT: (425) 295-3228
CONTACT: JACKSON DOVE

PUGET SOUND ENERGY (GAS)
(425) 449-7410
CONTACT: JEANNE COLEMAN

PUGET SOUND ENERGY (POWER)
(425) 458-4542
CONTACT: JOSHUA GRENNER

CONTRACT NO. CO1281C18

REVISIONS	DATE	BY

DESIGNED M. MILLER
DRAWN C. JOHNSON
CHECKED D. PROCTOR
APPROVED C. BUITRAGO

ONE INCH AT FULL SCALE. IF NOT, SCALE ACCORDINGLY
FILE NAME PS1521075P23T14UT-01
JOB No. 554-1521-075 P23 T14
DATE MAY 2018

CRAIG ALEXANDER BUITRAGO, STATE OF WASHINGTON, 49427, REGISTERED PROFESSIONAL ENGINEER
5-4-2018

Parametrix
ENGINEERING . PLANNING . ENVIRONMENTAL SCIENCES
719 2ND AVENUE, SUITE 200 | SEATTLE, WA 98104
P 206.394.3700
WWW.PARAMETRIX.COM

PROJECT NAME
EAST LAKE SAMMAMISH MASTER PLAN TRAIL
ZACKUSE CREEK CUVERT REPLACEMENTS
SAMMAMISH, WA

UTILITY PROFILES

SHEET NO. 10 OF 23

UT2

PATH: U:\PSO\Projects\Clients\1521-KingCo\554-1521-075-ELST\99Svce\CADD\Phase 23\Task 14\DWG\
PLOTTED BY: purgebut DATE: Wednesday, May 2, 2018 4:52:01 PM
LAYOUT: UT2

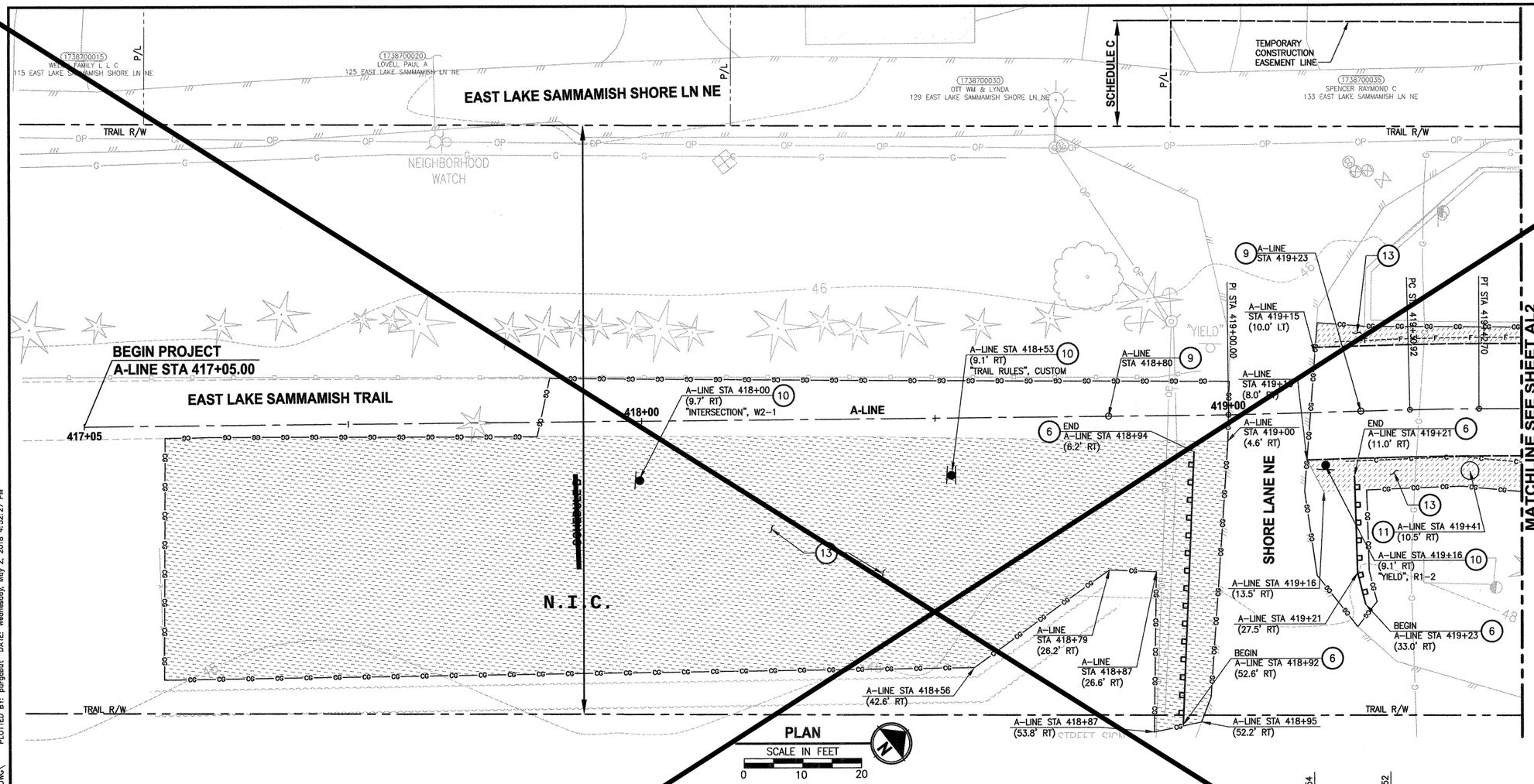

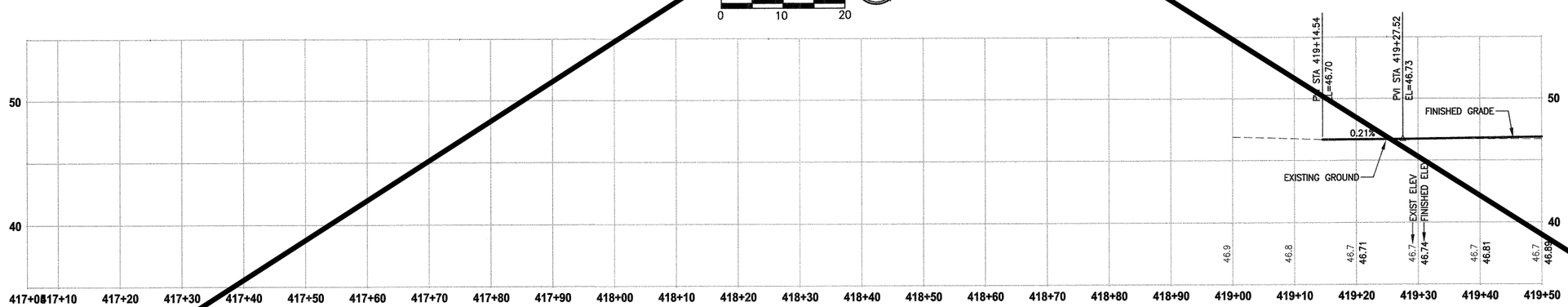

A-LINE PROFILE

HORIZ: 1"=10'
VERT: 1"=5'

CIVIL CONSTRUCTION NOTES:

1. INSTALL BEAM GUARDRAIL TYPE 31. SEE WSDOT STD PLAN C-20.10-04.
2. INSTALL METAL RAILING. SEE DETAILS ON SHEET MD1.
3. INSTALL PRECAST REINF CONC SPLIT BOX CULVERT. SEE ST SHEETS FOR DETAILS. INSTALL WING WALL, SEE ST AND WP SHEETS.
4. INSTALL COATED CHAIN LINK FENCE TYPE 6. FOR GROUND POST INSTALLATION SEE APPENDIX B IN THE SPECIFICATIONS. SEE SHEET MD1 FOR INSTALLATION ON TOP OF CURB.
5. INSTALL SAWN LUMBER FENCE, SEE DETAILS ON SHEET MD1.
6. INSTALL WOOD GUARDRAIL, SEE DETAIL ON SHEET MD2.
7. INSTALL BEAM GUARDRAIL TYPE 31 ANCHOR TYPE 10, SEE WSDOT STD PLAN C-23.60-04.
8. INSTALL BEAM GUARDRAIL TYPE 31 PLACEMENT 18'-9" SPAN, SEE WSDOT STD PLAN C-20.40-06.
9. INSTALL REMOVABLE BOLLARD, SEE APPENDIX B IN THE SPECIFICATION.
10. INSTALL NEW POST AND SALVAGED SIGN, SEE DETAILS ON SHEET MD1.
11. INSTALL NEW TRASH RECEPTACLE AND PET WASTE STATION. SEE APPENDIX B IN THE SPECIFICATION.
12. INSTALL MAILBOX SUPPORT STRUCTURE, SEE SPECIAL PROVISIONS SECTION 8-18 AND APPENDIX B IN THE SPECIFICATIONS.
13. SEEDING AND MULCHING PER WSDOT STANDARD SPECIFICATIONS 8-01.
14. WET NATIVE SEEDING FOR WETLAND DISTURBANCE, SEE SPECIAL PROVISIONS SECTION 8-01.2.
15. INSTALL IRON FENCE. SEE SPECIAL PROVISIONS SECTION 8-12.

LEGEND:

- PRECAST WING WALL
- GUARDRAIL
- SAWN LUMBER FENCE
- CHAIN LINK FENCE/IRON FENCE
- METAL RAILING
- SEEDING AND MULCHING
- WET NATIVE SEEDING FOR WETLAND DISTURBANCE

N.I.C.

CONTRACT NO. CO1281C18

REVISIONS	DATE	BY

DESIGNED M. TSUN
DRAWN B. PURGANAN
CHECKED D. PROCTOR
APPROVED C. BUITRAGO

ONE INCH AT FULL SCALE. IF NOT, SCALE ACCORDINGLY
FILE NAME PS1521075P23T14AL-01
JOB No. 554-1521-075 P23 T14
DATE MAY 2018

CRAIG ALEXANDER BUITRAGO, STATE OF WASHINGTON, 49427, REGISTERED PROFESSIONAL ENGINEER
5-4-2018

Parametrix
ENGINEERING . PLANNING . ENVIRONMENTAL SCIENCES
719 2ND AVENUE, SUITE 200 | SEATTLE, WA 98104
P 206.394.3700
WWW.PARAMETRIX.COM

PROJECT NAME
EAST LAKE SAMMAMISH
MASTER PLAN TRAIL
ZACKUSE CREEK CUVERT REPLACEMENTS
SAMMAMISH, WA

PLAN AND PROFILE

SHEET NO. 11 OF 23
AL1

PATH: U:\PSO\Projects\Clients\1521-KingCo\554-1521-075-ELST\99Svcs\CADD\Phase 23\Task 14\DWG\ PLOTTED BY: purgabut DATE: Wednesday, May 2, 2018 4:52:27 PM
LAYOUT: AL1

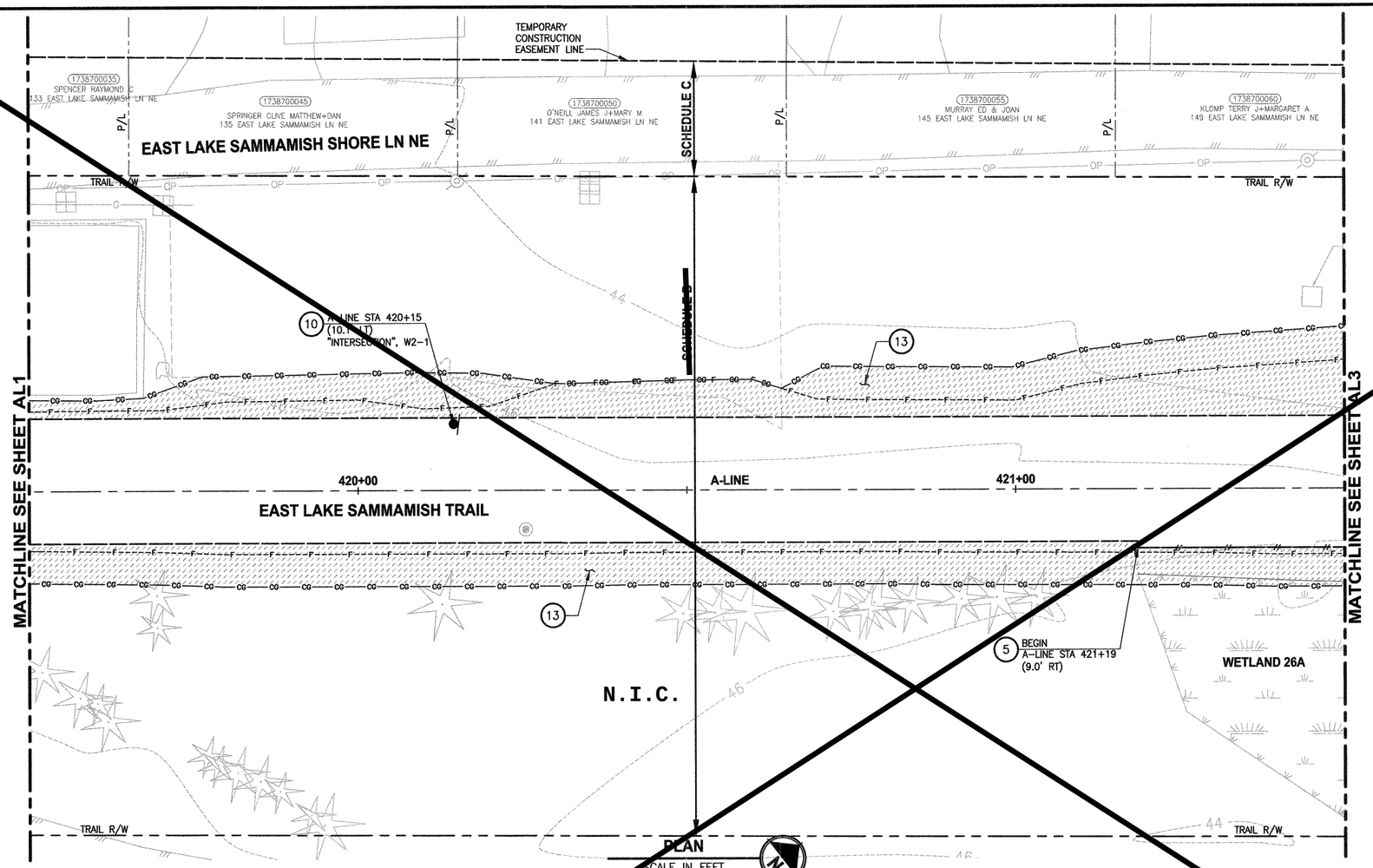

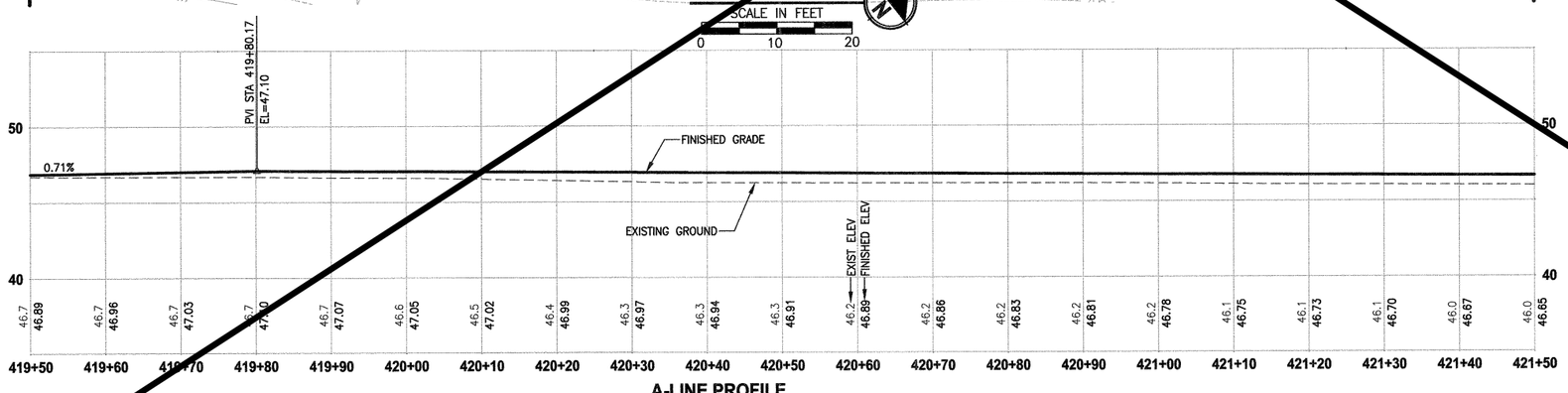

A-LINE PROFILE

HORIZ: 1"=10'
VERT: 1"=5'

CIVIL CONSTRUCTION NOTES:

1. INSTALL BEAM GUARDRAIL TYPE 31, SEE WSDOT STD PLAN C-20.10-04.
2. INSTALL METAL RAILING, SEE DETAILS ON SHEET MD1.
3. INSTALL PRECAST REINF CONC SPLIT BOX CULVERT. SEE ST SHEETS FOR DETAILS. INSTALL WING WALL, SEE ST AND WP SHEETS.
4. INSTALL COATED CHAIN LINK FENCE TYPE 6. FOR GROUND POST INSTALLATION SEE APPENDIX B IN THE SPECIFICATIONS. SEE SHEET MD1 FOR INSTALLATION ON TOP OF CURB.
5. INSTALL SAWN LUMBER FENCE, SEE DETAILS ON SHEET MD1.
6. INSTALL WOOD GUARDRAIL, SEE DETAIL ON SHEET MD2.
7. INSTALL BEAM GUARDRAIL TYPE 31 ANCHOR TYPE 10, SEE WSDOT STD PLAN C-23.60-04.
8. INSTALL BEAM GUARDRAIL TYPE 31 PLACEMENT 18'-9" SPAN, SEE WSDOT STD PLAN C-20.40-06.
9. INSTALL REMOVABLE BOLLARD, SEE APPENDIX B IN THE SPECIFICATION.
10. INSTALL NEW POST AND SALVAGED SIGN, SEE DETAILS ON SHEET MD1.
11. INSTALL NEW TRASH RECEPTACLE AND PET WASTE STATION. SEE APPENDIX B IN THE SPECIFICATION.
12. INSTALL MAILBOX SUPPORT STRUCTURE, SEE SPECIAL PROVISIONS SECTION 8-18 AND APPENDIX B IN THE SPECIFICATIONS.
13. SEEDING AND MULCHING PER WSDOT STANDARD SPECIFICATIONS 8-01.
14. WET NATIVE SEEDING FOR WETLAND DISTURBANCE, SEE SPECIAL PROVISIONS SECTION 8-01.2.
15. INSTALL IRON FENCE. SEE SPECIAL PROVISIONS SECTION 8-12.

LEGEND:

- PRECAST WING WALL
- GUARDRAIL
- SAWN LUMBER FENCE
- CHAIN LINK FENCE/IRON FENCE
- METAL RAILING
- SEEDING AND MULCHING
- WET NATIVE SEEDING FOR WETLAND DISTURBANCE

N.I.C.

CONTRACT NO. CO1281C18

REVISIONS	DATE	BY

DESIGNED M. TSUN
DRAWN B. PURGANAN
CHECKED D. PROCTOR
APPROVED C. BUITRAGO

ONE INCH AT FULL SCALE. IF NOT, SCALE ACCORDINGLY
FILE NAME PS1521075P23T14AL-01
JOB No. 554-1521-075 P23 T14
DATE MAY 2018

STATE OF WASHINGTON CRAIG ALEXANDER BUITRAGO 49427 REGISTERED PROFESSIONAL ENGINEER
5-4-2018

Parametrix
ENGINEERING . PLANNING . ENVIRONMENTAL SCIENCES
719 2ND AVENUE, SUITE 200 | SEATTLE, WA 98104
P 206.394.3700
WWW.PARAMETRIX.COM

PROJECT NAME
EAST LAKE SAMMAMISH
MASTER PLAN TRAIL
ZACKUSE CREEK CUVERT REPLACEMENTS
SAMMAMISH, WA

PLAN AND PROFILE

SHEET NO. 12 OF 23
AL2

PATH: U:\PSO\Projects\Clients\1521-KingCo\554-1521-075-ELST\99Svca\CADD\Phase 23\Task 14\DWG\ PLOTTED BY: purgabut DATE: Wednesday, May 2, 2018 4:52:30 PM LAYOUT: AL2

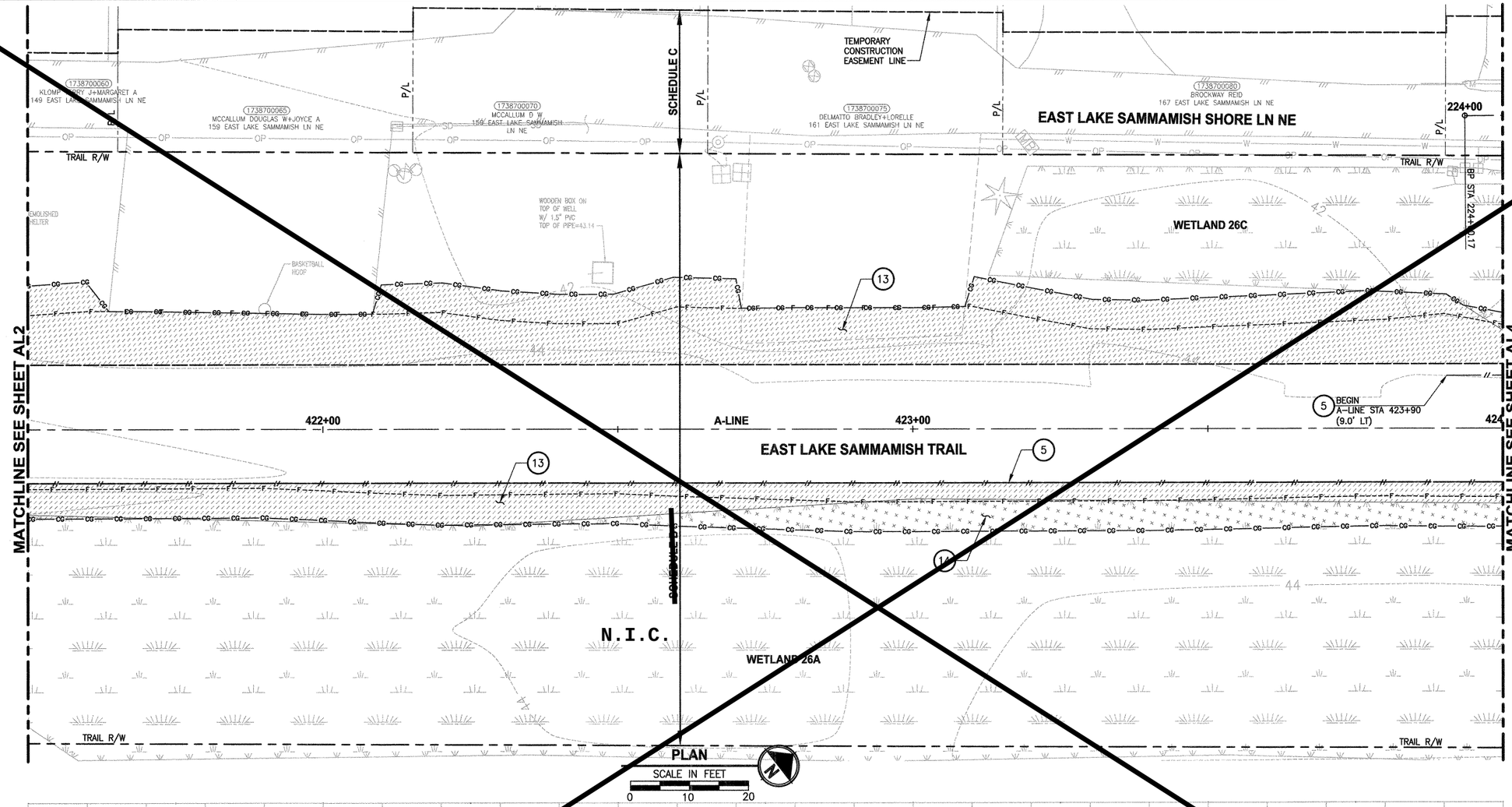

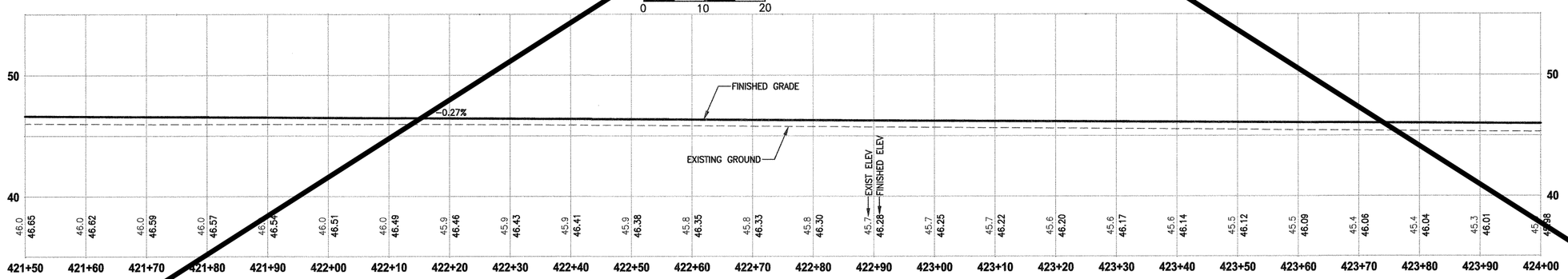

A-LINE PROFILE

HORIZ: 1"=10'
VERT: 1"=5'

CIVIL CONSTRUCTION NOTES:

1. INSTALL BEAM GUARDRAIL TYPE 31, SEE WSDOT STD PLAN C-20.10-04.
2. INSTALL METAL RAILING, SEE DETAILS ON SHEET MD1.
3. INSTALL PRECAST REINF CONC SPLIT BOX CULVERT. SEE ST SHEETS FOR DETAILS. INSTALL WING WALL, SEE ST AND WP SHEETS.
4. INSTALL COATED CHAIN LINK FENCE TYPE 6. FOR GROUND POST INSTALLATION SEE APPENDIX B IN THE SPECIFICATIONS. SEE SHEET MD1 FOR INSTALLATION ON TOP OF CURB.
5. INSTALL SAWN LUMBER FENCE, SEE DETAILS ON SHEET MD1.
6. INSTALL WOOD GUARDRAIL, SEE DETAIL ON SHEET MD2.
7. INSTALL BEAM GUARDRAIL TYPE 31 ANCHOR TYPE 10, SEE WSDOT STD PLAN C-23.60-04.
8. INSTALL BEAM GUARDRAIL TYPE 31 PLACEMENT 18'-9" SPAN, SEE WSDOT STD PLAN C-20.40-06.
9. INSTALL REMOVABLE BOLLARD, SEE APPENDIX B IN THE SPECIFICATION.
10. INSTALL NEW POST AND SALVAGED SIGN, SEE DETAILS ON SHEET MD1.
11. INSTALL NEW TRASH RECEPTACLE AND PET WASTE STATION. SEE APPENDIX B IN THE SPECIFICATION.
12. INSTALL MAILBOX SUPPORT STRUCTURE, SEE SPECIAL PROVISIONS SECTION 8-18 AND APPENDIX B IN THE SPECIFICATIONS.
13. SEEDING AND MULCHING PER WSDOT STANDARD SPECIFICATIONS 8-01.
14. WET NATIVE SEEDING FOR WETLAND DISTURBANCE, SEE SPECIAL PROVISIONS SECTION 8-01.2.
15. INSTALL IRON FENCE. SEE SPECIAL PROVISIONS SECTION 8-12.

LEGEND:

- PRECAST WING WALL
- GUARDRAIL
- SAWN LUMBER FENCE
- CHAIN LINK FENCE/IRON FENCE
- METAL RAILING
- SEEDING AND MULCHING
- WET NATIVE SEEDING FOR WETLAND DISTURBANCE

N.I.C.

CONTRACT NO. CO1281C18

REVISIONS	DATE	BY

DESIGNED M. TSUN
DRAWN B. PURGANAN
CHECKED D. PROCTOR
APPROVED C. BUITRAGO

ONE INCH AT FULL SCALE. IF NOT, SCALE ACCORDINGLY

FILE NAME PS1521075P23T14AL-01
JOB No. 554-1521-075 P23 T14
DATE MAY 2018

CRAIG ALEXANDER BUITRAGO
STATE OF WASHINGTON
49427
REGISTERED PROFESSIONAL ENGINEER
5-4-2018

Parametrix
ENGINEERING . PLANNING . ENVIRONMENTAL SCIENCES
719 2ND AVENUE, SUITE 200 | SEATTLE, WA 98104
P 206.394.3700
WWW.PARAMETRIX.COM

PROJECT NAME
EAST LAKE SAMMAMISH
MASTER PLAN TRAIL
ZACKUSE CREEK CUVERT REPLACEMENTS
SAMMAMISH, WA

PLAN AND PROFILE

SHEET NO. 13 OF 23
AL3

PATH: U:\PSO\Projects\Clients\1521-KingCo\554-1521-075-ELST\99Svcs\CADD\Phase 23\Task 14\DWG\
PLOTTED BY: purgabut DATE: Wednesday, May 2, 2018 4:52:36 PM
LAYOUT: AL3

N.I.C

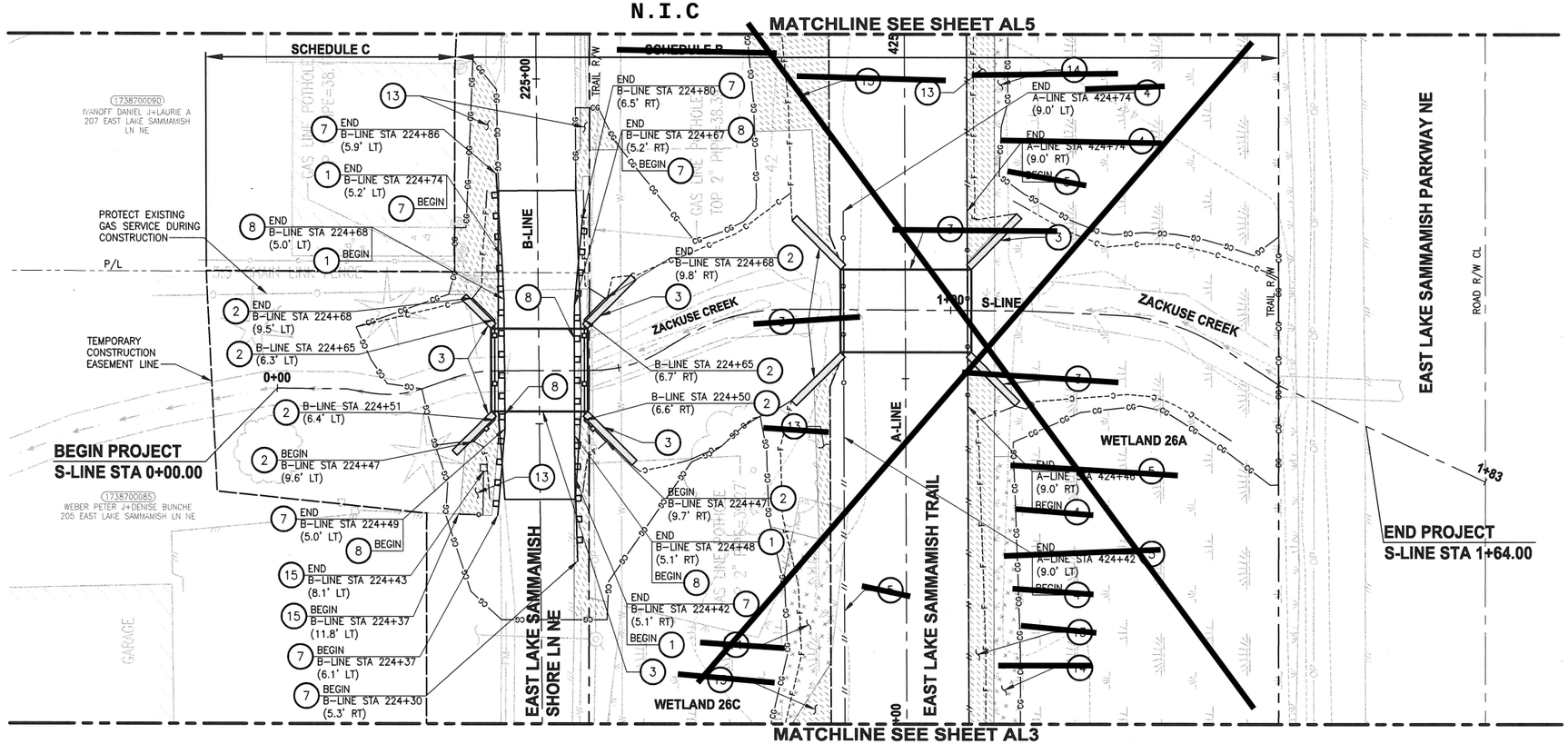

PLAN

SCALE IN FEET 0 10 20

CIVIL CONSTRUCTION NOTES:

1. INSTALL BEAM GUARDRAIL TYPE 31, SEE WSDOT STD PLAN C-20.10-04.
2. INSTALL METAL RAILING, SEE DETAILS ON SHEET MD1.
3. INSTALL PRECAST REINF CONC SPLIT BOX CULVERT. SEE ST SHEETS FOR DETAILS. INSTALL WING WALL, SEE ST AND WP SHEETS.
4. INSTALL COATED CHAIN LINK FENCE TYPE 6. FOR GROUND POST INSTALLATION SEE APPENDIX B IN THE SPECIFICATIONS. SEE SHEET MD1 FOR INSTALLATION ON TOP OF CURB.

N.I.C

5. ~~INSTALL SAWN LUMBER FENCE, SEE DETAILS~~ ON SHEET MD1.
6. ~~INSTALL WOOD GUARDRAIL, SEE DETAIL ON SHEET MD2.~~
7. INSTALL BEAM GUARDRAIL TYPE 31 ANCHOR TYPE 10, SEE WSDOT STD PLAN C-23.60-04.
8. INSTALL BEAM GUARDRAIL TYPE 31 PLACEMENT 18'-9" SPAN, SEE WSDOT STD PLAN C-20.40-06.
9. ~~INSTALL REMOVABLE BOLLARD, SEE APPENDIX B IN THE SPECIFICATION.~~

N.I.C

10. INSTALL NEW POST AND SALVAGED SIGN, SEE DETAILS ON SHEET MD1.
11. ~~INSTALL NEW TRASH RECEPTACLE AND PET WASTE~~ STATION. SEE APPENDIX B IN THE SPECIFICATION.
12. INSTALL MAILBOX SUPPORT STRUCTURE, SEE SPECIAL PROVISIONS SECTION 8-18 AND APPENDIX B IN THE SPECIFICATIONS.
13. SEEDING AND MULCHING PER WSDOT STANDARD SPECIFICATIONS 8-01.

N.I.C

14. ~~WET NATIVE SEEDING FOR~~ WETLAND DISTURBANCE, SEE SPECIAL PROVISIONS SECTION 8-01.2.
15. INSTALL IRON FENCE. SEE SPECIAL PROVISIONS SECTION 8-12.

LEGEND:

- PRECAST WING WALL
- GUARDRAIL
- SAWN LUMBER FENCE
- CHAIN LINK FENCE/IRON FENCE
- METAL RAILING
- SEEDING AND MULCHING
- WET NATIVE SEEDING FOR WETLAND DISTURBANCE

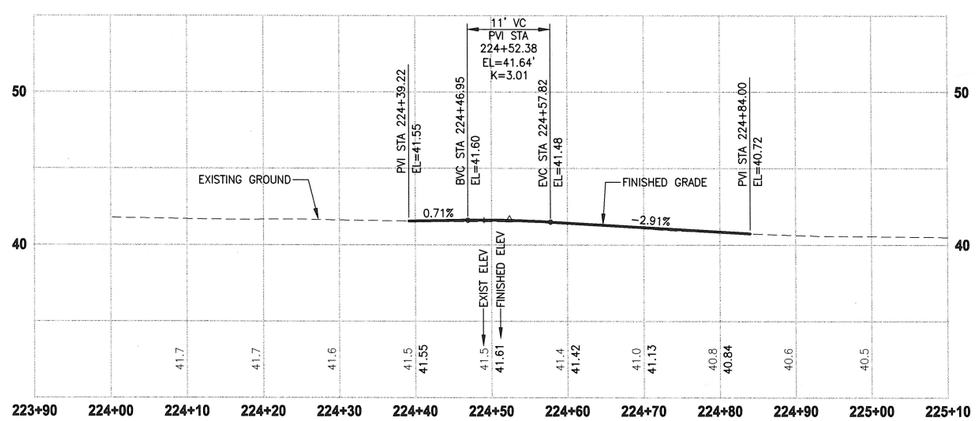

B-LINE PROFILE

HORIZ: 1"=10'
VERT: 1"=5'

N.I.C

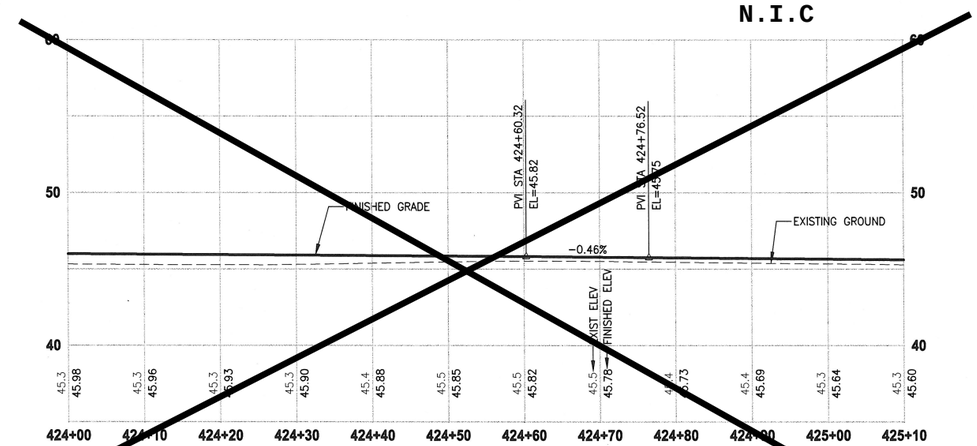

A-LINE PROFILE

HORIZ: 1"=10'
VERT: 1"=5'

CONTRACT NO. CO1281C18

REVISIONS	DATE	BY

DESIGNED M. TSUN
DRAWN B. PURGANAN
CHECKED D. PROCTOR
APPROVED C. BUITRAGO

ONE INCH AT FULL SCALE. IF NOT, SCALE ACCORDINGLY

FILE NAME PS1521075P23T14AL-01
JOB No. 554-1521-075 P23 T14
DATE MAY 2018

CRAIG ALEXANDER BUITRAGO — STATE OF WASHINGTON — 49427 — REGISTERED PROFESSIONAL ENGINEER
5-17-2018

Parametrix
ENGINEERING . PLANNING . ENVIRONMENTAL SCIENCES
719 2ND AVENUE, SUITE 200 | SEATTLE, WA 98104
P 206.394.3700
WWW.PARAMETRIX.COM

PROJECT NAME
EAST LAKE SAMMAMISH
MASTER PLAN TRAIL
ZACKUSE CREEK CUVERT REPLACEMENTS
SAMMAMISH, WA

PLAN AND PROFILE

SHEET NO. 14 OF 23

AL4

PATH: U:\PSO\Projects\Clients\1521-KingCo\554-1521-075-ELST\99Svcs\CADD\Phase 23\Task 14\DWG\ PLOTTED BY: buitcra DATE: Thursday, May 17, 2018 7:43:16 AM
LAYOUT: AL4

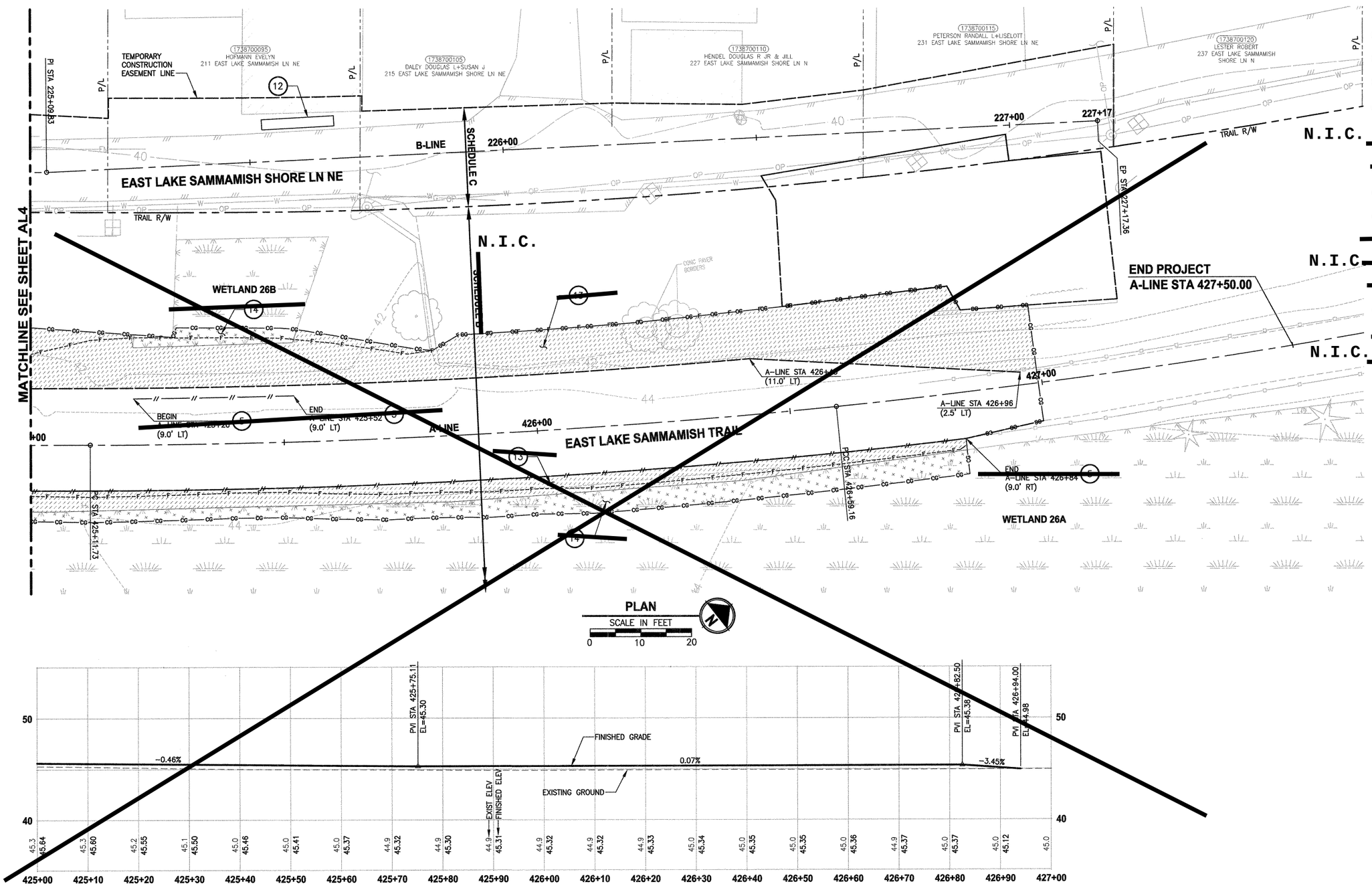

A-LINE PROFILE

HORIZ: 1"=10'
VERT: 1"=5'

CIVIL CONSTRUCTION NOTES:

1. INSTALL BEAM GUARDRAIL TYPE 31, SEE WSDOT STD PLAN C-20.10-04.
2. INSTALL METAL RAILING, SEE DETAILS ON SHEET MD1.
3. INSTALL PRECAST REINF CONC SPLIT BOX CULVERT. SEE ST SHEETS FOR DETAILS. INSTALL WING WALL, SEE ST AND WP SHEETS.
4. ~~INSTALL COATED SAWN WING FENCE TYPE 2 FOR GROUND POST INSTALLATION SEE APPENDIX B IN THE SPECIFICATIONS. SEE SHEET MD1 FOR INSTALLATION ON TOP OF CURB.~~
5. ~~INSTALL SAWN LUMBER FENCE, SEE DETAILS ON SHEET MD1.~~
6. ~~INSTALL WOOD GUARDRAIL, SEE DETAIL ON SHEET MD2.~~
7. INSTALL BEAM GUARDRAIL TYPE 31 ANCHOR TYPE 10, SEE WSDOT STD PLAN C-23.60-04.
8. INSTALL BEAM GUARDRAIL TYPE 31 PLACEMENT 18'-9" SPAN, SEE WSDOT STD PLAN C-20.40-06.
9. ~~INSTALL REMOVABLE BOLLARD, SEE APPENDIX B IN THE SPECIFICATION.~~
10. ~~INSTALL NEW POST AND SALVAGED SIGN, SEE DETAILS ON SHEET MD1.~~
11. ~~INSTALL NEW TRASH RECEPTACLE AND PET WASTE STATION. SEE APPENDIX B IN THE SPECIFICATION.~~
12. INSTALL MAILBOX SUPPORT STRUCTURE, SEE SPECIAL PROVISIONS SECTION 8-18 AND APPENDIX B IN THE SPECIFICATIONS.
13. ~~SEEDING AND MULCHING PER WSDOT STANDARD~~ SPECIFICATIONS 8-01.
14. ~~WET NATIVE SEEDING FOR WETLAND DISTURBANCE, SEE SPECIAL PROVISIONS~~ SECTION 8-01.2.
15. INSTALL IRON FENCE. SEE SPECIAL PROVISIONS SECTION 8-12.

LEGEND:

- PRECAST WING WALL
- GUARDRAIL
- SAWN LUMBER FENCE
- CHAIN LINK FENCE/IRON FENCE
- METAL RAILING
- SEEDING AND MULCHING
- WET NATIVE SEEDING FOR WETLAND DISTURBANCE

CONTRACT NO. CO1281C18

REVISIONS	DATE	BY

DESIGNED M. TSUN
DRAWN B. PURGANAN
CHECKED D. PROCTOR
APPROVED C. BUITRAGO

ONE INCH AT FULL SCALE. IF NOT, SCALE ACCORDINGLY
FILE NAME PS1521075P23T14AL-01
JOB No. 554-1521-075 P23 T14
DATE MAY 2018

CRAIG ALEXANDER BUITRAGO, STATE OF WASHINGTON, 49427, REGISTERED PROFESSIONAL ENGINEER
5-4-2018

Parametrix
ENGINEERING . PLANNING . ENVIRONMENTAL SCIENCES
719 2ND AVENUE, SUITE 200 | SEATTLE, WA 98104
P 206.394.3700
WWW.PARAMETRIX.COM

PROJECT NAME
EAST LAKE SAMMAMISH
MASTER PLAN TRAIL
ZACKUSE CREEK CUVERT REPLACEMENTS
SAMMAMISH, WA

PLAN AND PROFILE

SHEET NO. 15 OF 23
AL5

PATH: U:\PSO\Projects\Clients\1521-KingCo\554-1521-075-ELST\99Svcs\CADD\Phase 23\Task 14\DWG\ PLOTTED BY: purgabut DATE: Wednesday, May 2, 2018 4:52:46 PM
LAYOUT: AL5

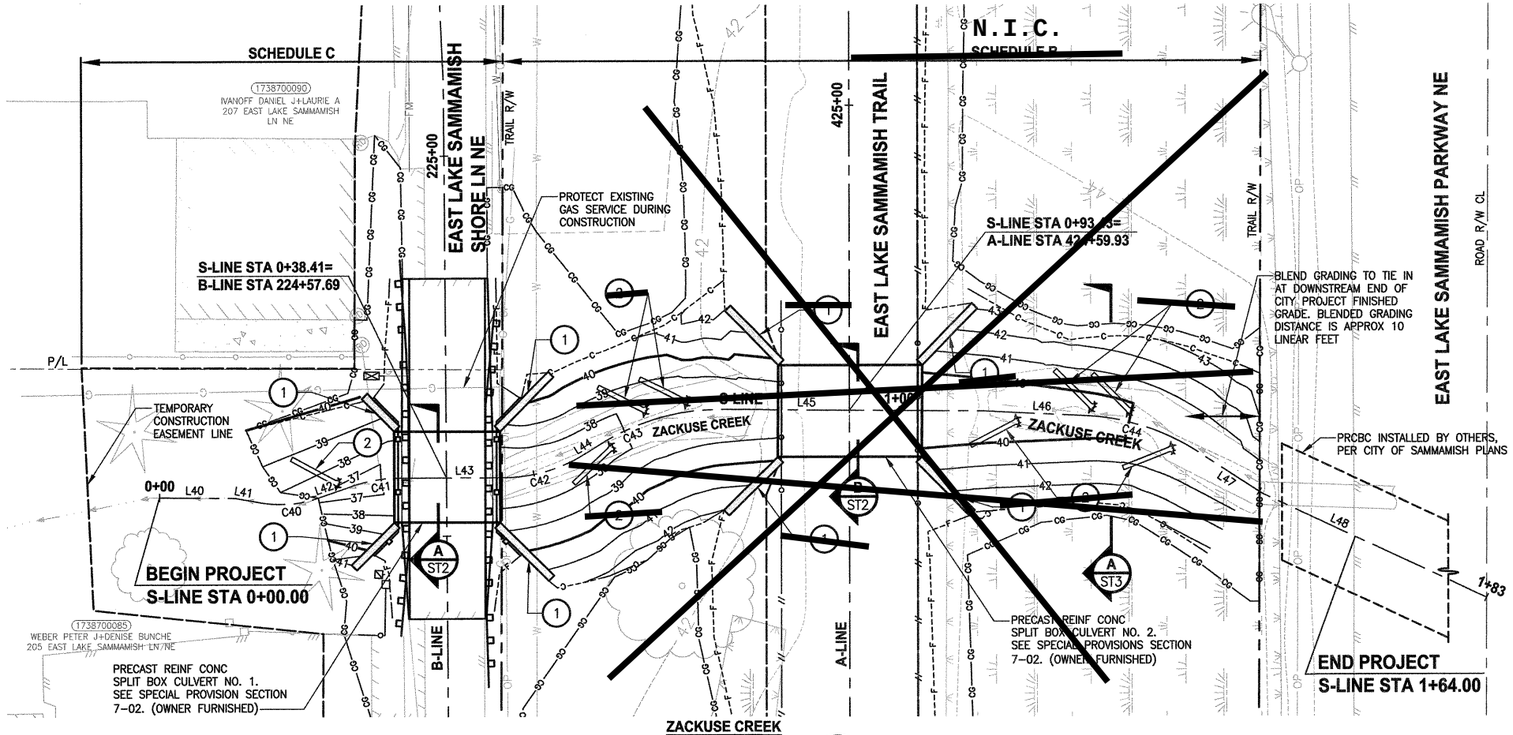

ZACKUSE CREEK
PLAN
SCALE IN FEET
0 10' 20'

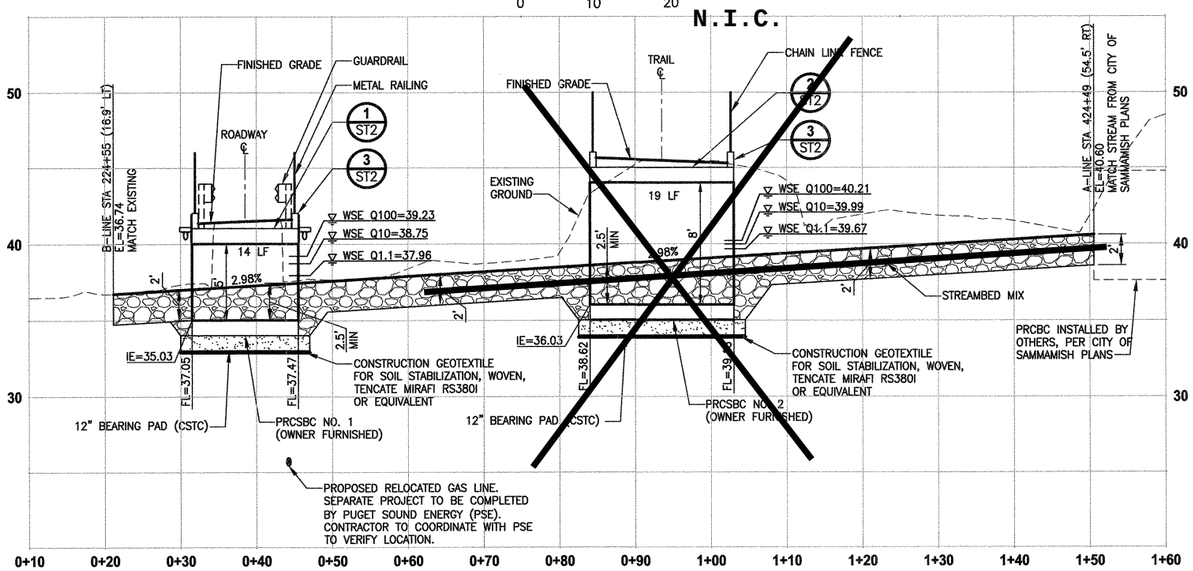

ZACKUSE CREEK PROFILE
HORIZ: 1"=10'
VERT: 1"=5'

GENERAL NOTES:

1. PRCSBC = PRECAST REINF. CONC. SPLIT BOX CULVERT. (FURNISHED BY OWNER).
2. PRECAST REINF. CONC. SPLIT BOX CULVERT (PRCSBC) LOADING: AASHTO HL-93. (FURNISHED BY OWNER).
3. CONSTRUCTION ACTIVITY FOR CULVERTS SHALL NOT OCCUR UNTIL FISH REMOVAL (BY OWNER) IS COMPETED AND TEMPORARY STREAM DIVERSION IS WORKING.
4. BOX CULVERTS AND STREAM WORK BELOW ORDINARY HIGH WATER LINE SHALL ONLY OCCUR BETWEEN JULY 1 AND SEPTEMBER 30 PER HPA APPROVAL CONDITIONS.

CONSTRUCTION NOTES:

1. FOR WING WALL PLAN AND PROFILES, SEE SHEET WP1.
2. LOG WITH ROOTWAD, SEE SHEET ST3 AND SPECIAL PROVISIONS SECTION 8-02.
3. STREAMBED MIX, SEE SHEET ST3 AND SPECIAL PROVISIONS SECTION 8-15.

S-LINE LINE TABLE

LINE	LENGTH	BEARING	BEGIN EASTING	BEGIN NORTHING	END EASTING	END NORTHING
L40	10.00	S51° 20' 08"E	1335368.28	225395.42	1335376.09	225389.17
L41	3.52	S42° 04' 03"E	1335376.09	225389.17	1335378.45	225386.56
L42	4.63	S71° 02' 37"E	1335384.71	225382.42	1335389.09	225380.92
L43	13.65	S52° 00' 45"E	1335394.90	225377.76	1335405.66	225369.36
L44	2.36	S83° 59' 25"E	1335415.87	225365.24	1335418.22	225364.99
L45	34.71	S51° 28' 09"E	1335433.77	225358.62	1335460.93	225337.00
L46	13.31	S49° 06' 36"E	1335460.93	225337.00	1335470.99	225328.29
L47	10.02	S18° 51' 10"E	1335479.74	225315.30	1335482.98	225305.82
L48	32.66	S26° 46' 30"E	1335482.98	225305.82	1335497.69	225276.67

S-LINE CURVE TABLE

CURVE	LENGTH	RADIUS	DELTA	BEGIN EASTING	BEGIN NORTHING	END EASTING	END NORTHING
C40	7.59	15.00	28°58'34"	1335378.45	225386.56	1335384.71	225382.42
C41	6.64	20.00	19°01'52"	1335389.09	225380.92	1335394.90	225377.76
C42	11.16	20.00	31°58'41"	1335405.66	225369.36	1335415.87	225365.24
C43	17.03	30.00	32°31'16"	1335418.22	225364.99	1335433.77	225358.62
C44	15.84	30.00	30°15'25"	1335470.99	225328.29	1335479.74	225315.30

CONTACT INFORMATION:

UTILITY:
ONE-CALL 1 (800) 424-5555

SAMMAMISH PLATEAU WATER AND SEWER DISTRICT
OFFICE: (425) 392-6256
DIRECT: (425) 295-3228
CONTACT: JACKSON DOVE

PUGET SOUND ENERGY (GAS)
(425) 449-7410
CONTACT: JEANNE COLEMAN

PUGET SOUND ENERGY (POWER)
(425) 457-4542
CONTACT: JOSHUA GRENNER

CONTRACT NO. CO1281C18

REVISIONS	DATE	BY

DESIGNED C. BUITRAGO
DRAWN B. PURGANAN
CHECKED D. PROCTOR
APPROVED C. BUITRAGO

ONE INCH AT FULL SCALE. IF NOT, SCALE ACCORDINGLY
FILE NAME PS1521075P23T14ST-01
JOB No. 554-1521-075 P23 T14
DATE MAY 2018

CRAIG ALEXANDER BUITRAGO, STATE OF WASHINGTON, 49427, REGISTERED PROFESSIONAL ENGINEER
5-4-2018

Parametrix
ENGINEERING . PLANNING . ENVIRONMENTAL SCIENCES
719 2ND AVENUE, SUITE 200 | SEATTLE, WA 98104
P 206.394.3700
WWW.PARAMETRIX.COM

PROJECT NAME
EAST LAKE SAMMAMISH
MASTER PLAN TRAIL
ZACKUSE CREEK CUVERT REPLACEMENTS
SAMMAMISH, WA

STREAM AND CULVERT PLAN AND PROFILE

SHEET NO. 16 OF 23
ST1

PATH: U:\PSO\Projects\Clients\1521-KingCo\554-1521-075-ELST\99Svcs\CADD\Phase 23\Task 14\DWG\
PLOTTED BY: purgabut DATE: Wednesday, May 2, 2018 4:53:02 PM
LAYOUT: ST1

GENERAL NOTES:

1. PRCSBC = PRECAST REINF. CONC. SPLIT BOX CULVERT. (FURNISHED BY OWNER).
2. PRECAST REINF. CONC. SPLIT BOX CULVERT (PRCSBC) LOADING: AASHTO HL-93. (FURNISHED BY OWNER).
3. CONSTRUCTION ACTIVITY FOR CULVERTS SHALL NOT OCCUR UNTIL FISH REMOVAL (BY OWNER) IS COMPETED AND TEMPORARY STREAM DIVERSION IS WORKING.
4. BOX CULVERTS AND STREAM WORK BELOW ORDINARY HIGH WATER LINE SHALL ONLY OCCUR BETWEEN JULY 1 AND SEPTEMBER 30 PER HPA APPROVAL CONDITIONS.

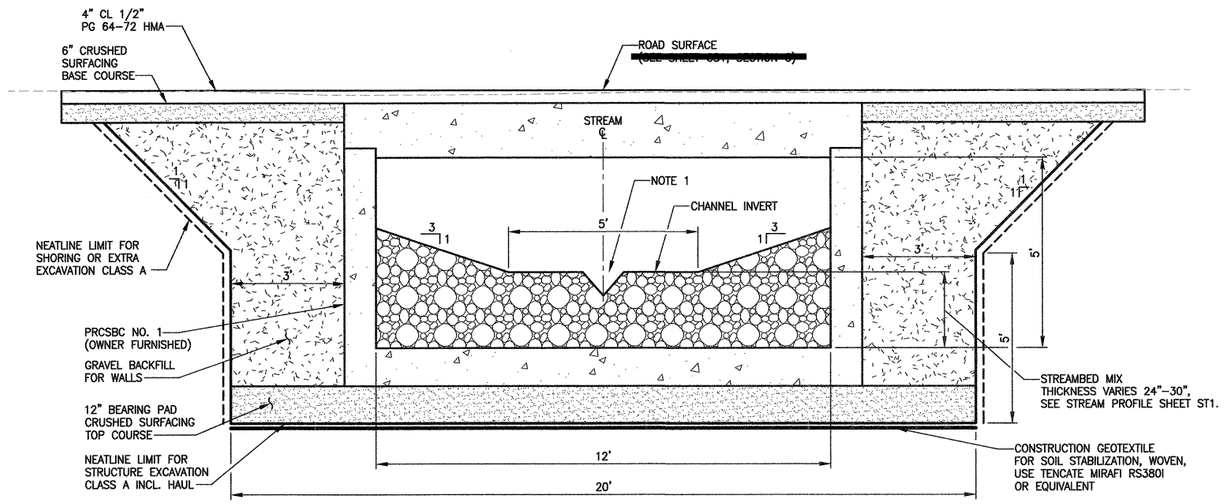

SCHEDULE C
ZACKUSE CREEK 1 (PRCSBC NO. 1)
TYPICAL SECTION (A)
NOT TO SCALE

NOTE:
1. LOW FLOW CHANNEL TO BE INSTALLED AS DIRECTED BY THE ENGINEER.

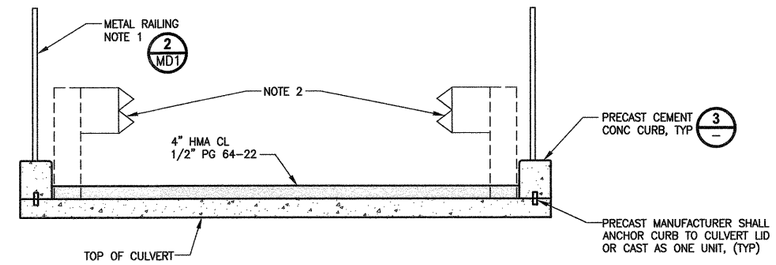

SCHEDULE C
PRCSBC NO. 1 CULVERT COVER
DETAIL (1)
NOT TO SCALE

NOTES:
1. METAL RAILING POSTS SHALL BE PLATE MOUNTED TO CONCRETE CURB. SEE (3/MD1)
2. INSTALL BEAM GUARDRAIL TYPE 31 PLACEMENT 18'-9" SPAN, SEE WSDOT STD PLAN C-20.40-06.

N.I.C

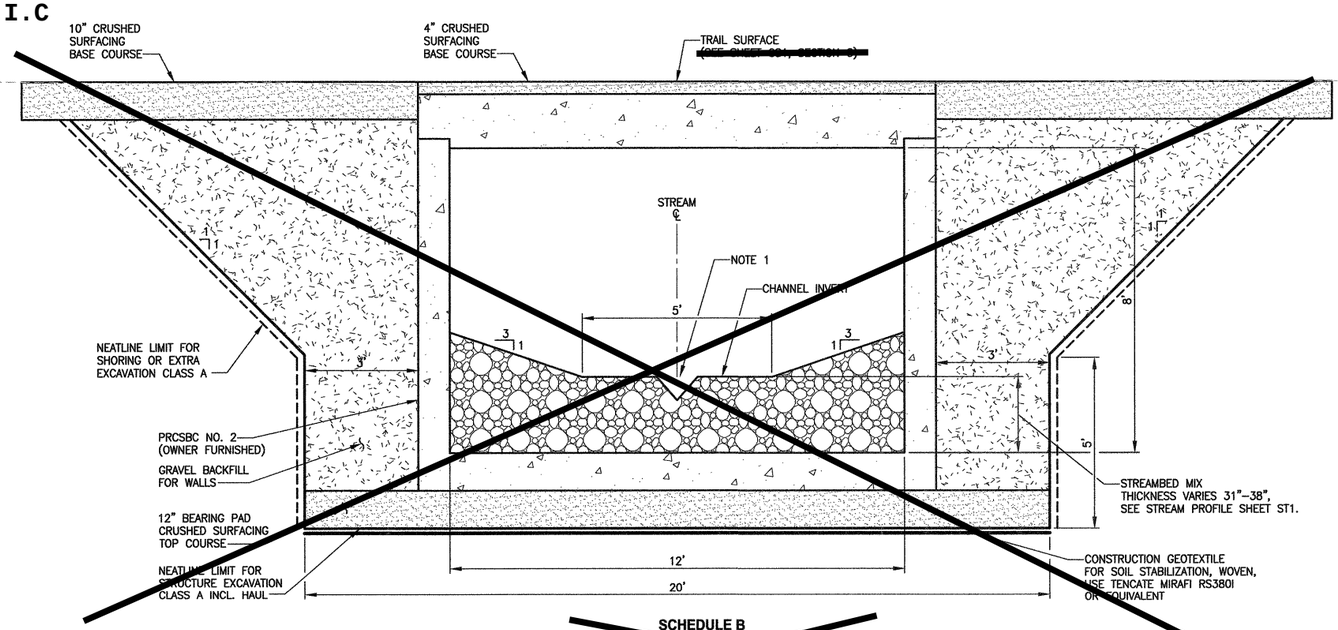

SCHEDULE B
ZACKUSE CREEK 2 (PRCSBC NO. 2)
TYPICAL SECTION (B)
NOT TO SCALE

NOTES:
1. LOW FLOW CHANNEL TO BE INSTALLED AS DIRECTED BY THE ENGINEER.

N.I.C

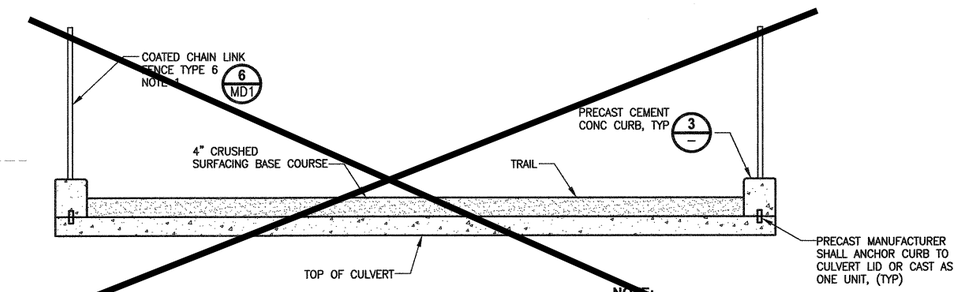

SCHEDULE B
PRCSBC NO. 2 CULVERT COVER
DETAIL (2)
NOT TO SCALE

NOTE:
1. FENCE POST SHALL BE MOUNTED IN CONCRETE CURB. SEE (6/MD1)

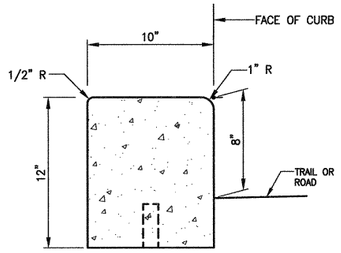

PRECAST CEMENT CONCRETE CURB
DETAIL (3)
NOT TO SCALE

CONTRACT NO. CO1281C18

	REVISIONS	DATE	BY

DESIGNED C. BUITRAGO
DRAWN B. PURGANAN
CHECKED D. PROCTOR
APPROVED C. BUITRAGO

ONE INCH AT FULL SCALE. IF NOT, SCALE ACCORDINGLY
FILE NAME PS1521075P23T14ST-01
JOB No. 554-1521-075 P23 T14
DATE MAY 2018

CRAIG ALEXANDER BUITRAGO — STATE OF WASHINGTON — 49427 — REGISTERED PROFESSIONAL ENGINEER
5-4-2018

Parametrix
ENGINEERING . PLANNING . ENVIRONMENTAL SCIENCES
719 2ND AVENUE, SUITE 200 | SEATTLE, WA 98104
P 206.394.3700
WWW.PARAMETRIX.COM

PROJECT NAME
EAST LAKE SAMMAMISH MASTER PLAN TRAIL
ZACKUSE CREEK CUVERT REPLACEMENTS
SAMMAMISH, WA

STREAM AND CULVERT DETAILS

SHEET NO. 17 OF 23
ST2

PATH: U:\PSO\Projects\Clients\1521-KingCo\554-1521-075-ELST\99Svcs\CADD\Phase 23\Task 14\DWG\ PLOTTED BY: purganan DATE: Wednesday, May 2, 2018 4:53:06 PM LAYOUT: ST2

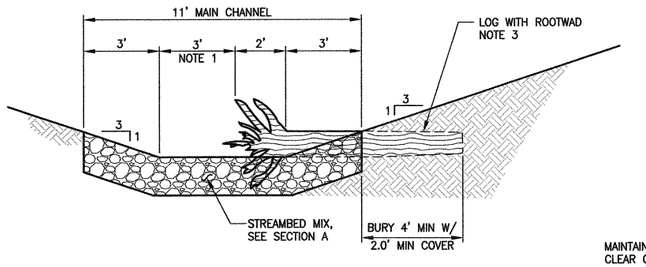

SECTION

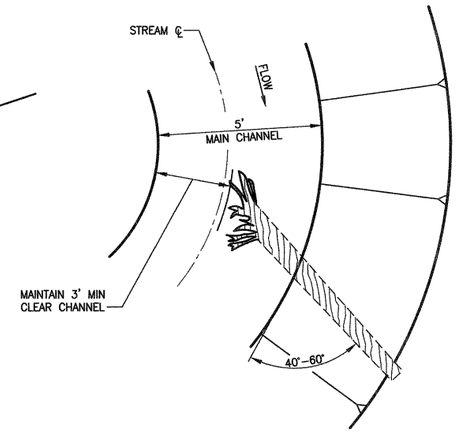

PLAN

LOG WITH ROOTWAD
DETAIL (1)
NO SCALE

NOTES:

1. MAINTAIN 3' OF MAIN CHANNEL UNOBSTRUCTED ACROSS FROM ROOTWAD.
2. BURY LOG WITH ROOTWAD MINIMUM OF 4' INTO BANK TO SECURE.
3. LOGS WITH ROOTWAD SHALLL BE CONIFER TREES. THE PROJECT WILL PLACE 8 LOGS WITH ROOTWAD IN THE STREAM. LOGS WITH ROOTWAD SHALL MEET THE ACCEPTABLE DIAMETER RANGE OF 12-INCHES TO 16-INCHES MEASURED FOUR FEET FROM THE BASE. LOGS SHALL BE A MINIMUM OF 12 FEET IN LENGTH MEASURED FROM TOP OF THE ROOTWAD, AND FREE OF BRANCHES, WITH BARK AND ROOTS INTACT. ROOTS SHALL BE FREE OF ROCKS AND SOIL. SEE SPECIAL PROVISIONS SECTION 8-02.

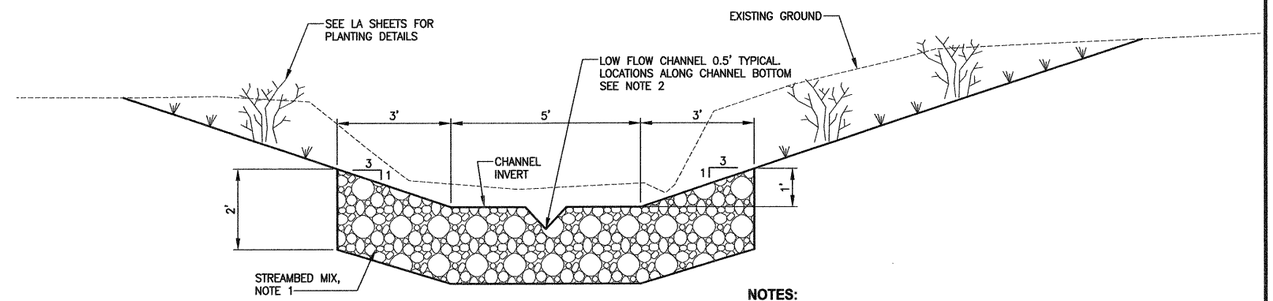

STREAM
TYPICAL SECTION (A)
NOT TO SCALE

NOTES:

1. STREAMBED MIX SHALL CONSIST OF 70 PERCENT STREAMBED SEDIMENT AND 30 PERCENT 4-INCH STREAMBED COBBLES. STREAMBED SEDIMENT GRADATION SHALL BE PER SECTION 9-03.11(1) AND STREAMBED COBBLES (4-INCH COBBLES) GRADATION SHALL BE PER SECTION 9-03.11(2) OF THE WSDOT STANDARD SPECIFICATIONS. SEE SPECIAL PROVISIONS SECTION 8-15.
2. LOCATE LOW FLOW CHANNEL AT CENTER OF CHANNEL IN TANGENT SECTIONS AND AT 1' OFFSET ON THE OUTSIDE OF BENDS WITH SMOOTH TRANSITIONS.

CONTRACT NO. CO1281C18

	REVISIONS	DATE	BY

DESIGNED C. BUITRAGO
DRAWN B. PURGANAN
CHECKED D. PROCTOR
APPROVED C. BUITRAGO

ONE INCH AT FULL SCALE. IF NOT, SCALE ACCORDINGLY
FILE NAME PS1521075P23T14ST-01
JOB No. 554-1521-075 P23 T14
DATE MAY 2018

CRAIG ALEXANDER BUITRAGO
STATE OF WASHINGTON
49427
REGISTERED PROFESSIONAL ENGINEER
5-4-2018

Parametrix
ENGINEERING . PLANNING . ENVIRONMENTAL SCIENCES
719 2ND AVENUE, SUITE 200 | SEATTLE, WA 98104
P 206.394.3700
WWW.PARAMETRIX.COM

PROJECT NAME
EAST LAKE SAMMAMISH
MASTER PLAN TRAIL
ZACKUSE CREEK CUVERT REPLACEMENTS
SAMMAMISH, WA

STREAM AND CULVERT DETAILS

SHEET NO. 18 OF 23
ST3

PATH: U:\PSO\Projects\Clients\1521-KingCo\554-1521-075-ELST\99Svce\CADD\Phase 23\Task 14\DWG\ PLOTTED BY: purgobut DATE: Wednesday, May 2, 2018 4:53:10 PM
LAYOUT: ST3

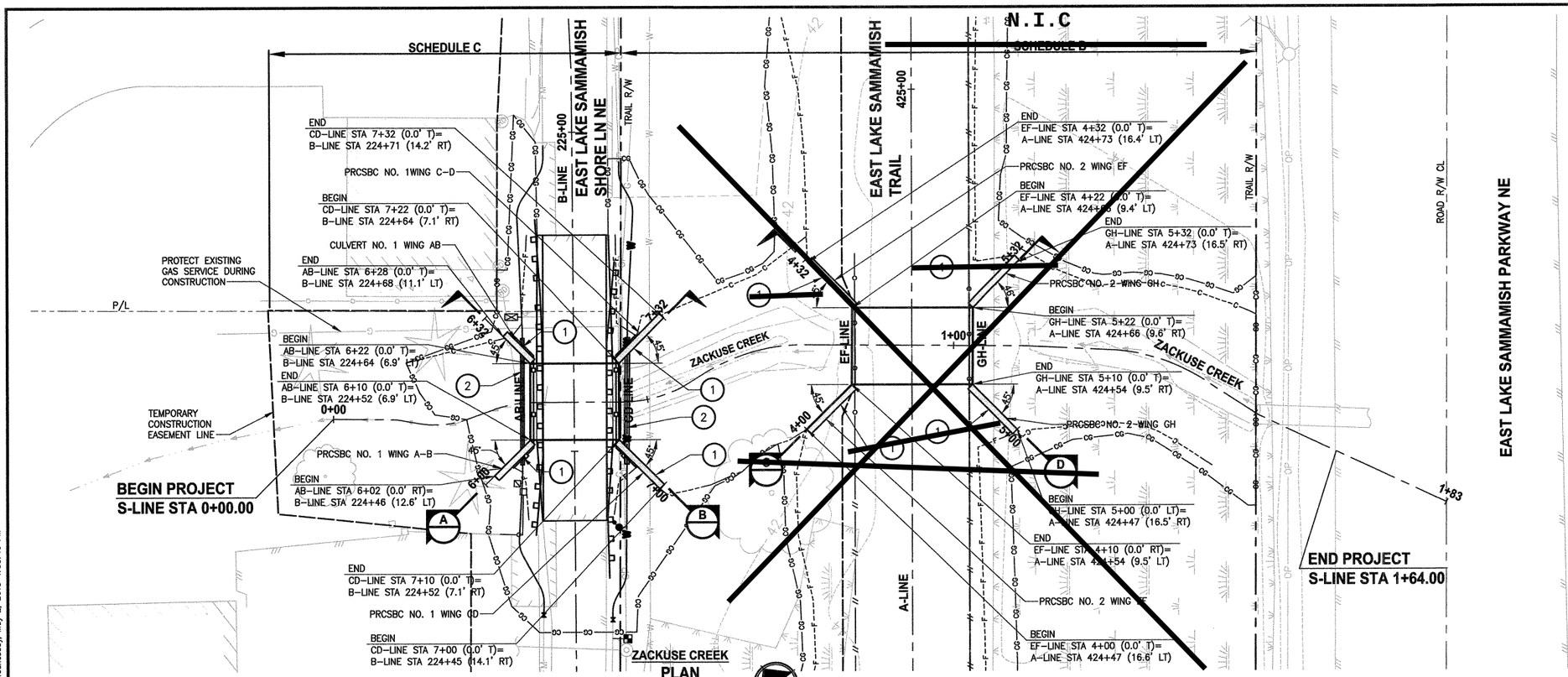

CONSTRUCTION NOTES:

1. PRECAST CONCRETE WING WALL AND FOOTING ASSOCIATED WITH PRECAST REINFORCED CONCRETE CULVERT (PRCSBC) (OWNER FURNISHED). WALL PROFILES PROVIDED THIS SHEET.
2. BLOCK OUT FOR UTILITY CASING PIPE. BLOCK OUT WILL BE INCLUDED IN PRECAST CONCRETE WING WALL (OWNER FURNISHED).

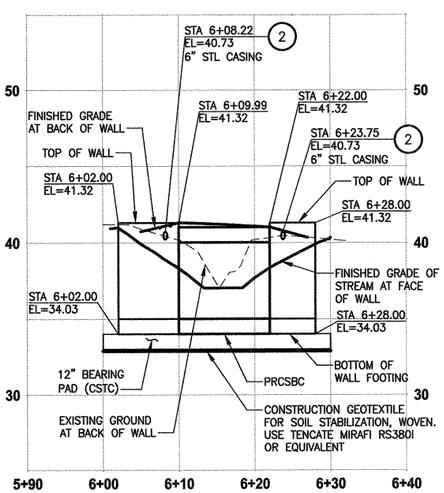

ZACKUSE CREEK
PROFILE PRCSBC NO. 1 WING AB
SECTION A
HORIZ: 1"=10'
VERT: 1"=5'

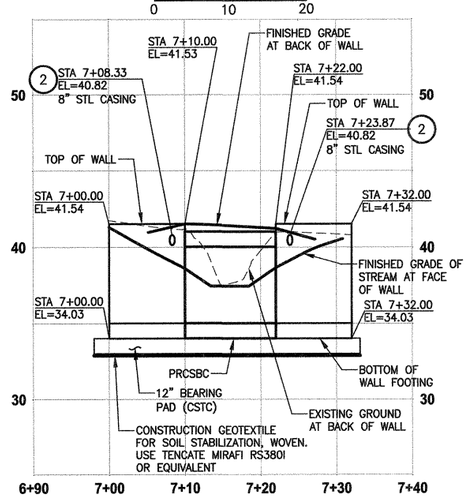

ZACKUSE CREEK
PROFILE PRCSBC NO. 1 WING CD
SECTION B
HORIZ: 1"=10'
VERT: 1"=5'

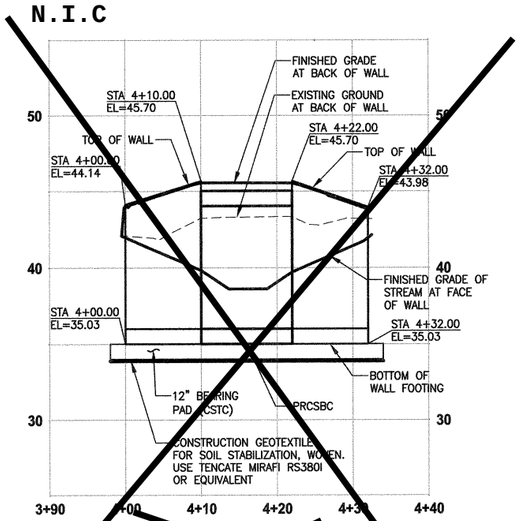

ZACKUSE CREEK
PROFILE PRCSBC NO. 2 WING EF
SECTION C
HORIZ: 1"=10'
VERT: 1"=5'

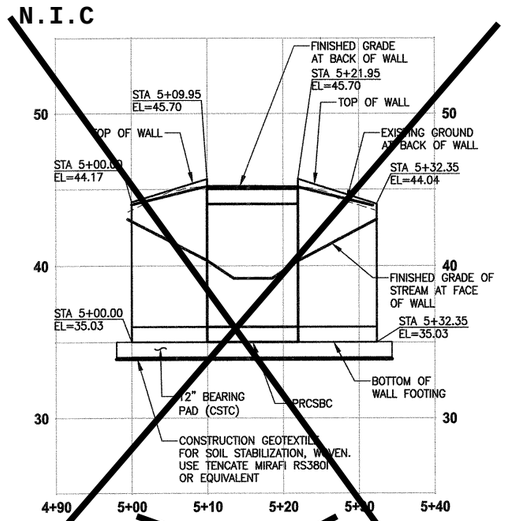

ZACKUSE CREEK
PROFILE PRCSBC NO. 2 WING GH
SECTION D
HORIZ: 1"=10'
VERT: 1"=5'

CONTRACT NO. CO1281C18

REVISIONS	DATE	BY

DESIGNED M. TSUN
DRAWN B. PURGANAN
CHECKED D. PROCTOR
APPROVED C. BUITRAGO

ONE INCH AT FULL SCALE. IF NOT, SCALE ACCORDINGLY
FILE NAME PS15210 75P23T14WP-01
JOB No. 554-1521-075 P23 T14
DATE MAY 2018

CRAIG ALEXANDER BUITRAGO
STATE OF WASHINGTON
49427
REGISTERED PROFESSIONAL ENGINEER
5-4-2018

Parametrix
ENGINEERING . PLANNING . ENVIRONMENTAL SCIENCES
719 2ND AVENUE, SUITE 200 | SEATTLE, WA 98104
P 206.394.3700
WWW.PARAMETRIX.COM

PROJECT NAME
EAST LAKE SAMMAMISH
MASTER PLAN TRAIL
ZACKUSE CREEK CUVERT REPLACEMENTS
SAMMAMISH, WA

WING WALL PLAN AND PROFILE

SHEET NO.
19 OF 23
WP1

PATH: U:\PSO\Projects\Clients\1521-KingCo\554-1521-075-ELST\99Svcs\CADD\Phase 23\Task 14\DWG\
PLOTTED BY: purgabut DATE: Wednesday, May 2, 2018 4:53:43 PM
LAYOUT: WP1

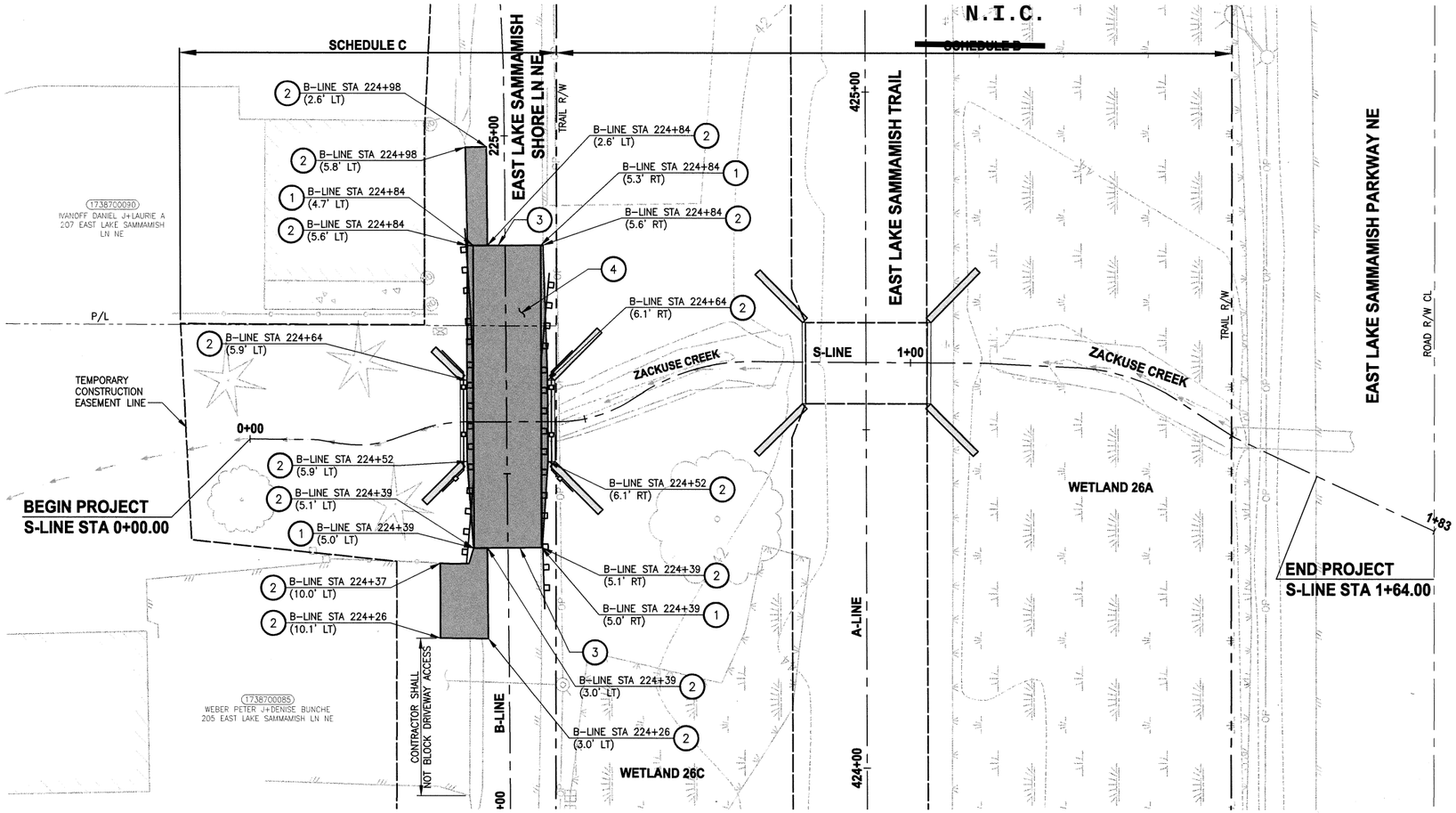

CONSTRUCTION NOTES:

1. PLASTIC WHITE LINE.
2. EDGE OF PAVEMENT.
3. TRANSVERSE JOINT, SEE SHEET MD1 FOR DETAIL.
4. HMA CL 1/2" PG 64-22

LEGEND:

HMA CL 1/2" PG 64-22

CONTRACT NO. CO1281C18

REVISIONS	DATE	BY

DESIGNED M. TSUN
DRAWN B. PURGANAN
CHECKED D. PROCTOR
APPROVED C. BUITRAGO

ONE INCH AT FULL SCALE. IF NOT, SCALE ACCORDINGLY

FILE NAME PS1521075P23T14PV-01
JOB No. 554-1521-075 P23 T14
DATE MAY 2018

CRAIG ALEXANDER BUITRAGO
STATE OF WASHINGTON
49427
REGISTERED PROFESSIONAL ENGINEER
5-4-2018

Parametrix
ENGINEERING . PLANNING . ENVIRONMENTAL SCIENCES
719 2ND AVENUE, SUITE 200 | SEATTLE, WA 98104
P 206.394.3700
WWW.PARAMETRIX.COM

PROJECT NAME
EAST LAKE SAMMAMISH
MASTER PLAN TRAIL
ZACKUSE CREEK CUVERT REPLACEMENTS
SAMMAMISH, WA

ROADWAY PAVEMENT AND CHANNELIZATION PLAN

SHEET NO. 20 OF 23

PV1

LAYOUT: PV1 PATH: U:\PSO\Projects\Clients\1521-KingCo\554-1521-075-ELST\995vcs\CADD\Phase 23\Task 14\DWG\ PLOTTED BY: purgabut DATE: Wednesday, May 2, 2018 9:51:29 AM

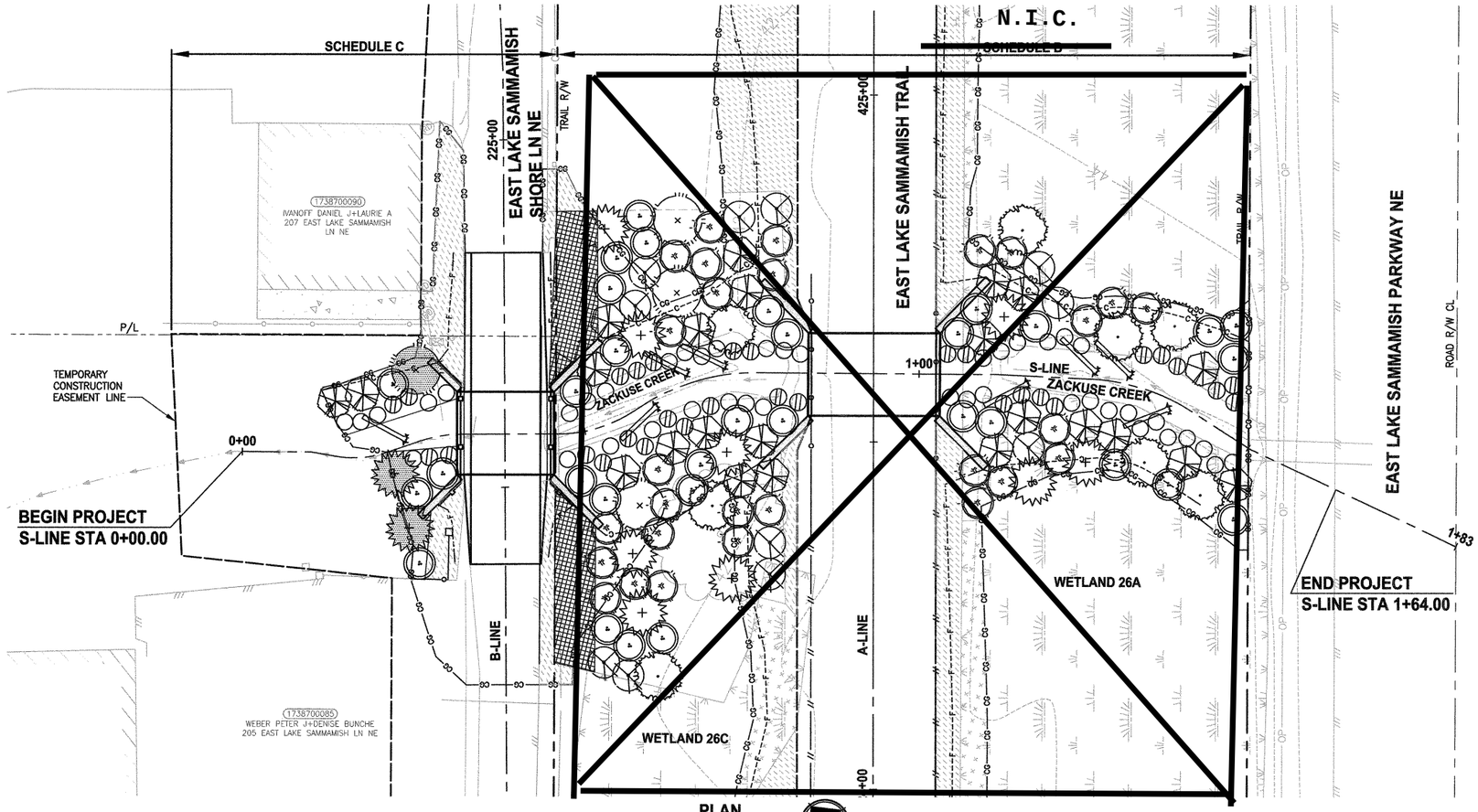

PLAN

SCALE IN FEET

0 10 20

PLANTING LEGEND AND SCHEDULE:

SYMBOL	QTY	COMMON NAME	BOTANICAL NAME	SIZE AND NOTES
	TREES			
	1	DOUGLAS FIR	PSEUDOTSUGA MENZIESII	MIN 8' HT B&B OR CONT. FULL, DENSE, AND SYMMETRICAL IN SHAPE
	2	WESTERN RED CEDAR	THUJA PLICATA	
	2	DOUGLAS FIR	PSEUDOTSUGA MENZIESII	MIN 3' HT B&B OR CONT. FULL, DENSE, AND SYMMETRICAL IN SHAPE
	8	SITKA SPRUCE	PICEA SITCHENSIS	
	11	WESTERN RED CEDAR	THUJA PLICATA	
	BUFFER PLANTING AREA SHRUBS			
	23	VINE MAPLE	ACER CIRCINATUM	MIN 18" HT MULTI-TRUNK
	32	TWINBERRY	LONICERA INVOLUCRATA	MIN 12" HT, #1 CONT. OR BAREROOT
	11	PACIFIC NINEBARK	PHYSOCARPOS CAPITATUS	
	28	COMMON SNOWBERRY	SYMPHORICARPOS ALBUS	
	25	MAHONIA REPENS	LOW OREGON GRAPE	#1 CONT. AND FULL TOP GROWTH. SPACE 2.5' O.C.
	25	POLYSTICHUM MUNITUM	SWORD FERN	
	RIPARIAN LIVESTAKE PLANTING			
	30	RED TWIG DOGWOOD	CORNUS SERICEA	½" – 1" DIAMETER X 36" LONG, MIN OF 12 LATERAL BUDS PER STAKE.
	44	SITKA WILLOW	SALIX SITCHENSIS	
		SEEDING AND MULCHING PER WSDOT STANDARD SPECIFICATIONS SECTION 8-01. *		
		WET NATIVE SEEDING FOR WETLAND DISTURBANCE, SEE SPECIAL PROVISIONS SECTION 8-01.2. *		

* NOTE: SEE AL SHEETS FOR SEEDING AREAS.

PLANT MATERIAL SETBACK CHART

	GUARDRAIL BARRIER	EDGE OF ROADWAY	PATHS, TRAILS	WALL	FENCE	SIGNS	EXISTING TREE, TRUNK	EXISTING VEGETATION MASS
EVERGREEN TREE	10'	10'	10'	8'	8'	15'	10'	–
ORNAMENTAL/NATIVE DECIDUOUS TREE	6'	6'	10'	8'	8'	15'	10'	–
MEDIUM AND LARGE SHRUBS – GREATER THAN 3' TALL	5'	5'	8'	3'	3'	6'	5'	5'
SMALL SHRUB – LESS THAN 3' TALL	3'	5'	5'	2'	3'	2'	5'	5'

TYPICAL MINIMUM DISTANCE SETBACKS ARE TO THE CENTER STEM OR TRUNK OF PLANT MATERIAL UNLESS OTHERWISE DIRECTED BY THE ENGINEER DURING LAYOUT AND STAKING OF PLANT LOCATIONS.

PLANTING NOTES:

1. CONTRACTOR SHALL ARRANGE TO MEET ON SITE WITH THE ENGINEER TO DISCUSS LIMITS OF WORK AND METHODS. CONSTRUCTION ACTIVITIES SHALL NOT COMMENCE UNTIL ACCESS, LIMITS OF WORK, AND METHODS ARE APPROVED. ALL SAFETY FENCING AND TESC MEASURES MUST BE INSTALLED PRIOR TO COMMENCING CONSTRUCTION ACTIVITIES.
2. ALL EXISTING PLANTS TO BE SAVED AND PROTECTED WITHIN PLANTING AREAS WILL BE FLAGGED BY ENGINEER. NOTIFY ENGINEER 5 DAYS PRIOR TO START OF CLEARING ACTIVITY.
3. MITIGATION PLANTING PLANS REPRESENT A CONCEPTUAL PLANT LAYOUT. FINAL PLANT LOCATIONS SHALL BE APPROVED BY ENGINEER PRIOR TO PLANTING.
4. AMEND ALL PLANTING AREA SOILS AND SEEDING AREAS WITH 3" SOIL AMENDMENT. TILL SOIL AMENDMENT 10" INTO GRADE. SOIL AMENDMENT SHALL BE FINE COMPOST.
5. ALL PLANTS SHALL BE NURSERY GROWN A MINIMUM OF ONE YEAR. PLANT MATERIAL IS TO BE SUPPLIED BY COMMERCIAL NURSERIES. PLANT SUBSTITUTIONS ARE SUBJECT TO APPROVAL BY ENGINEER.
6. THE CONTRACTOR SHALL BE RESPONSIBLE FOR DISPOSING OF ALL DEBRIS AND EXCESS SOIL OCCASIONED BY THIS PROJECT.
7. CONTRACTOR SHALL VERIFY THE LOCATION OF ALL UTILITIES PRIOR TO EXCAVATION.
8. ALL DIMENSIONS FOR LISTED HEIGHT, LENGTH AND CONTAINER SIZE ARE MINIMUM REQUIREMENTS.
9. EXISTING AREAS DISTURBED BY CONSTRUCTION ACTIVITIES AND NOT SHOWN TO BE RE-VEGETATED ON THESE PLANS SHALL BE RESTORED AND SEEDED.
10. DISCREPANCIES BETWEEN THE PLANS AND SITE CONDITIONS SHALL BE BROUGHT TO THE ATTENTION OF THE ENGINEER PRIOR TO PROCEEDING WITH EFFECTED WORK.
11. CONTRACTOR SHALL BE RESPONSIBLE FOR WATERING PLANTS FOR THE FIRST YEAR AFTER ACCEPTANCE OF COMPLETION OF PLANTING FOR THE PROJECT. COUNTY WILL MAKE PROVISIONS FOR WATERING AS NEEDED FOR THE REMAINDER OF THE ESTABLISHMENT PERIOD AFTER THE FIRST YEAR.
12. STAKE ALL TREES THAT ARE 3' AND TALLER.
13. CONTRACTOR SHALL REMOVE ALL TREE STAKES AT THE END OF 1 YEAR.

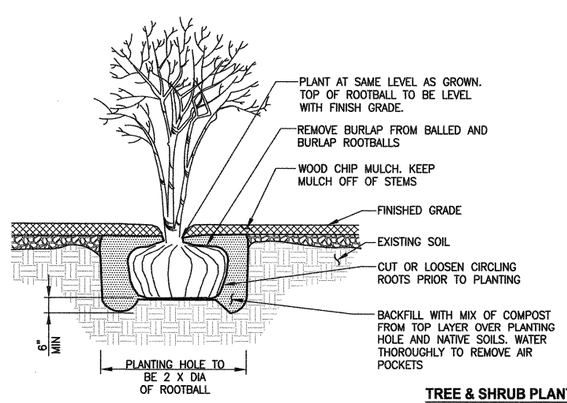

TREE & SHRUB PLANTING DETAIL 1

NOT TO SCALE

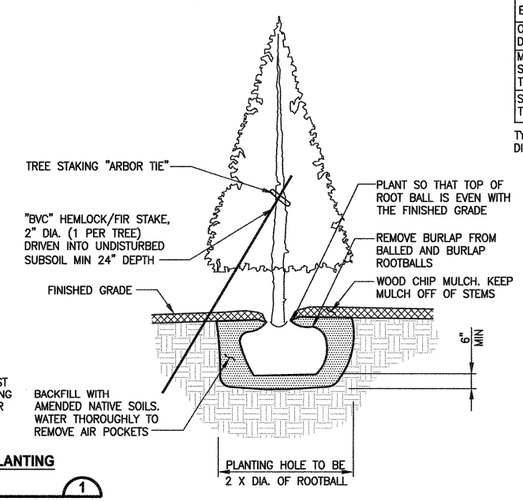

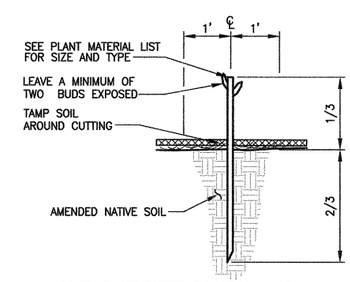

LIVE STAKE CUTTING INSTALLATION DETAIL 2

NOT TO SCALE

CONTRACT NO. CO1281C18

REVISIONS	DATE	BY

DESIGNED J. SWENSON
DRAWN J. SWENSON
CHECKED D. PROCTOR
APPROVED

ONE INCH AT FULL SCALE. IF NOT, SCALE ACCORDINGLY

FILE NAME PS1521075P23T14LA-01
JOB No. 554-1521-075 P23 T14
DATE MAY 2018

STATE OF WASHINGTON JENS SWENSON NO. 895 EXP. 10/31/2018 LANDSCAPE ARCHITECT

Parametrix
ENGINEERING . PLANNING . ENVIRONMENTAL SCIENCES
719 2ND AVENUE, SUITE 200 | SEATTLE, WA 98104
P 206.394.3700
WWW.PARAMETRIX.COM

PROJECT NAME
EAST LAKE SAMMAMISH
MASTER PLAN TRAIL
ZACKUSE CREEK CUVERT REPLACEMENTS
SAMMAMISH, WA

RESTORATION PLAN AND DETAILS

SHEET NO. 21 OF 23

LA1

PATH: U:\PSO\Projects\Clients\1521-KingCo\554-1521-075-ELST\99Svce\CADD\Phase 23\Task 14\DWG\ PLOTTED BY: purgebut DATE: Wednesday, May 2, 2018 4:54:31 PM LAYOUT: LA1

N.I.C.

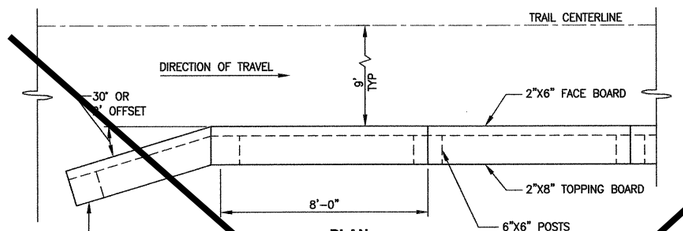

PLAN

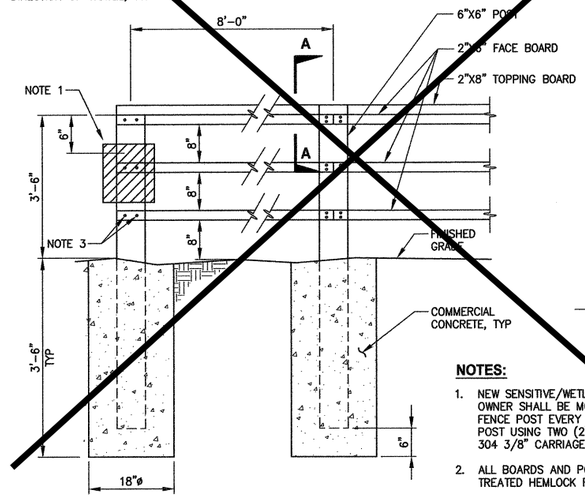

ELEVATION

3-RAIL SAWN LUMBER FENCE

DETAIL 1

NOT TO SCALE

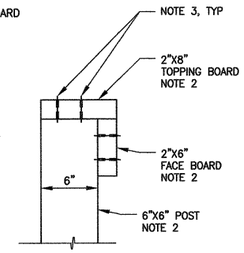

SECTION A-A

NOTES:

1. NEW SENSITIVE/WETLAND SIGNS PROVIDED BY OWNER SHALL BE MOUNTED ON SAWN LUMBER FENCE POST EVERY 100 FEET. MOUNT SIGN TO POST USING TWO (2) STAINLESS STEEL GRADE 304 3/8" CARRIAGE BOLT, NUT AND WASHER.
2. ALL BOARDS AND POSTS SHALL BE PRESSURE TREATED HEMLOCK FIR LUMBER.
3. ALL WOOD FASTENERS SHALL BE 2.5" LONG, #9 COATED STAR DRIVE DECK SCREWS.

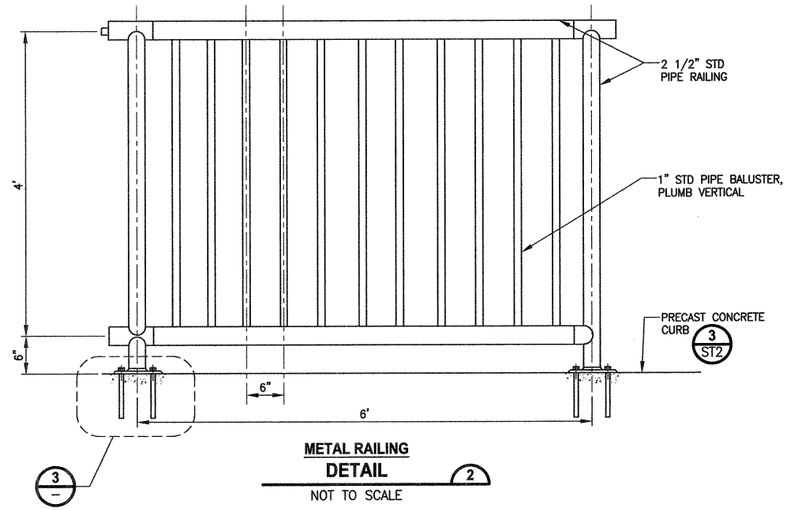

METAL RAILING

DETAIL 2

NOT TO SCALE

N.I.C.

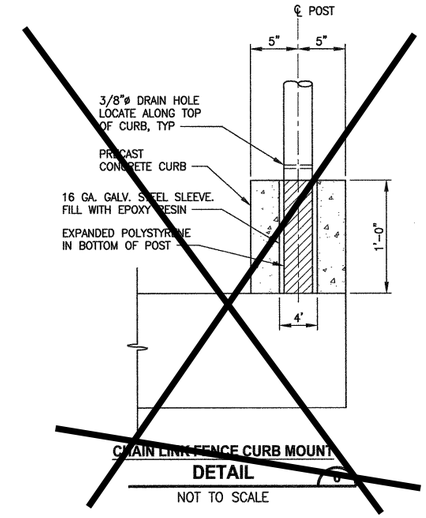

CHAIN LINK FENCE CURB MOUNT

DETAIL 6

NOT TO SCALE

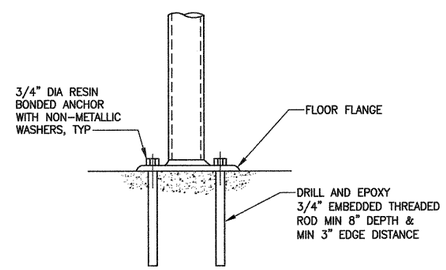

SECTION

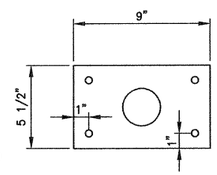

PLAN

NOTE:

1. WORK FOR RESIN BONDED ANCHORS AND FLOOR FLANGE ARE INCLUDED IN THE BID ITEM "METAL RAILING" SEE SPECIAL PROVISIONS SECTION 6-06. HARDWARE SHALL BE STAINLESS STEEL GRADE 304.

METAL RAILING FLOOR FLANGE

DETAIL 3

NOT TO SCALE

N.I.C.

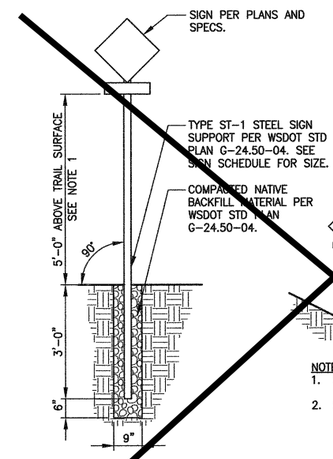

TRAIL SIDE SIGNAGE

NOTES:

1. USE 7' MOUNTING HEIGHT FOR TRAFFIC SIGNS ALONG ROADWAYS, SEE SPECIFICATIONS.
2. USE 5' MOUNTING HEIGHT FOR TRAIL SIGNS.

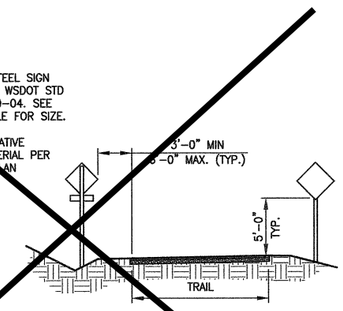

NOTES:

1. STAKE SIGN LOCATIONS FOR APPROVAL.
2. SEE SHEET MD2 FOR SIGN SCHEDULE.

TRAIL SIGNAGE

DETAIL 7

NOT TO SCALE

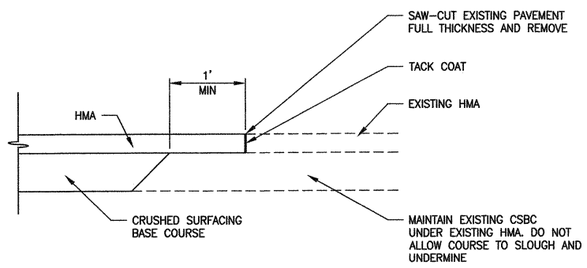

TRANSVERSE JOINT

DETAIL 4

NOT TO SCALE

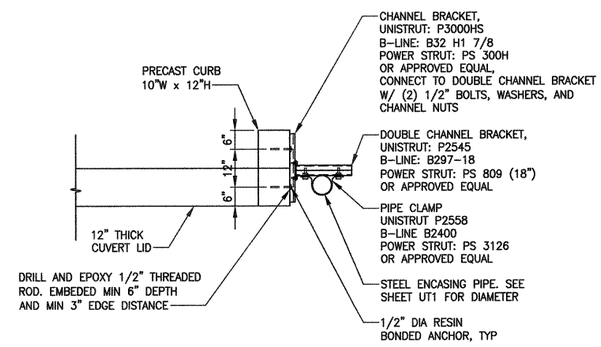

NOTES:

1. WORK FOR RESIN BONDED ANCHORS AND UTILITY SUPPORT SYSTEMS ARE INCLUDED IN THE BID ITEMS "RELOCATE WATER LINE" AND "RELOCATE LOW PRESSURE SEWER MAIN" SEE SPECIAL PROVISIONS.
2. UTILITY SUPPORT SYSTEM INCLUDING HARDWARE SHALL BE STAINLESS STEEL GRADE 304. CONTRACTOR SHALL PROVIDE BOLTS, WASHERS, AND CHANNEL NUTS FOR UTILITY SUPPORT SYSTEM ASSEMBLIES.

UTILITY SUPPORT SYSTEM

DETAIL 5

NOT TO SCALE

CONTRACT NO. CO1281C18

REVISIONS	DATE	BY

DESIGNED M. TSUN
DRAWN B. PURGANAN
CHECKED D. PROCTOR
APPROVED C. BUITRAGO

ONE INCH AT FULL SCALE. IF NOT, SCALE ACCORDINGLY

FILE NAME PS1521075P23T14MD-01
JOB No. 554-1521-075 P23 T14
DATE MAY 2018

CRAIG ALEXANDER BUITRAGO
STATE OF WASHINGTON
49427
REGISTERED PROFESSIONAL ENGINEER
5-4-2018

Parametrix
ENGINEERING . PLANNING . ENVIRONMENTAL SCIENCES
719 2ND AVENUE, SUITE 200 | SEATTLE, WA 98104
P 206.394.3700
WWW.PARAMETRIX.COM

PROJECT NAME
EAST LAKE SAMMAMISH
MASTER PLAN TRAIL
ZACKUSE CREEK CUVERT REPLACEMENTS
SAMMAMISH, WA

MISCELLANEOUS DETAILS

SHEET NO.
22 OF 23

MD1

LAYOUT: MD1 PATH: U:\PSO\Projects\Clients\1521-KingCo\554-1521-075-ELST\99Vcca\CADD\Phase 23\Task 14\DWG\ PLOTTED BY: purgabut DATE: Friday, May 4, 2018 9:34:47 AM

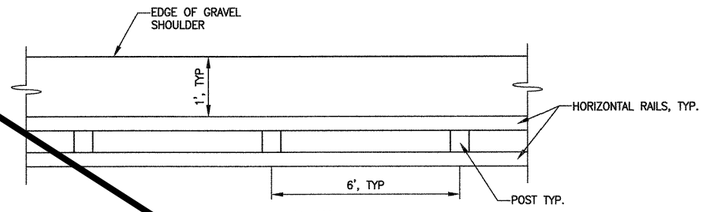

PLAN

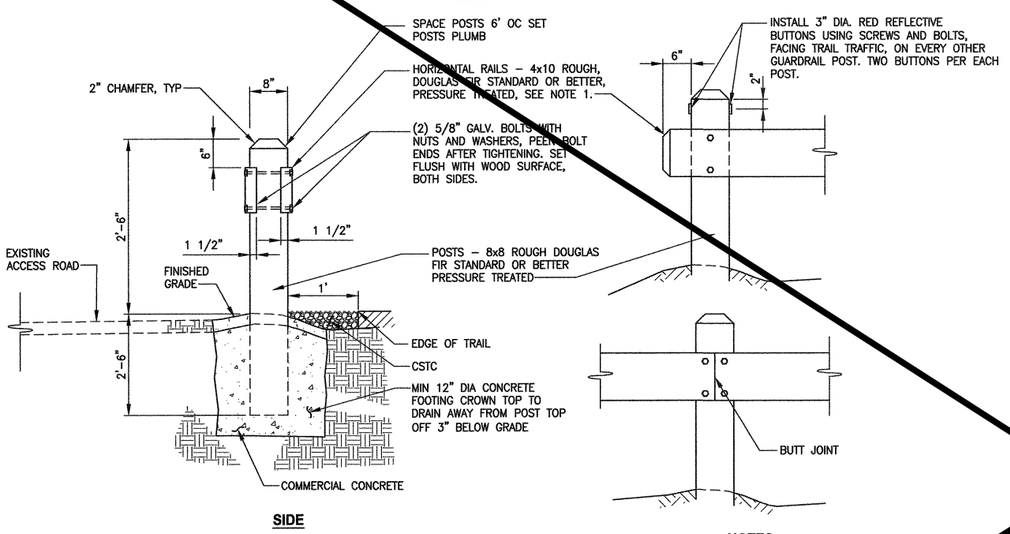

SIDE

WOOD GUARDRAIL
DETAIL (1)
NOT TO SCALE

NOTES:

1. ALLOW FOR 10 1/4" CUT IN POST TO SET IN HORIZONTAL RAIL.
2. ALL FIELD DRILLING OR CUT SECTIONS OF GUARDRAIL SHALL BE TREATED WITH A WOOD PRESERVATIVE PER SECTION 9-09.3.

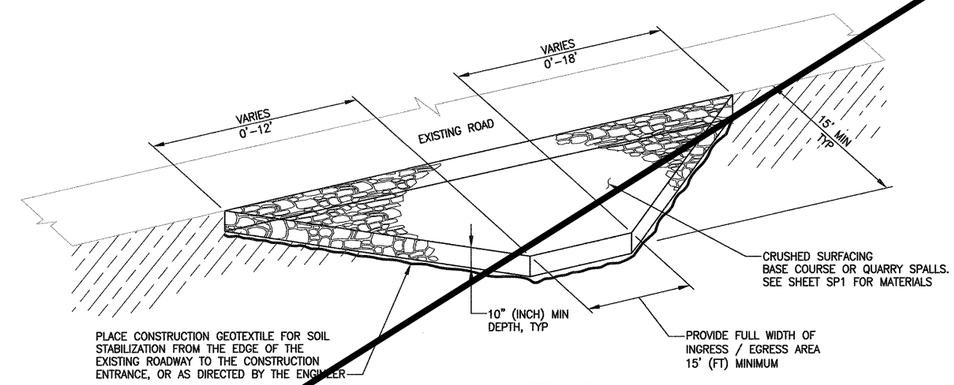

ISOMETRIC VIEW

STABILIZED CONSTRUCTION ENTRANCE
DETAIL (2)
NOT TO SCALE

NOTES:

1. CONTRACTOR IS RESPONSIBLE FOR MAINTAINING CONSTRUCTION ENTRANCE AT NO COST TO THE OWNER.

SIGN SCHEDULE

LOCATION			DESCRIPTION	MUTCD SIGN	SIGN SIZE	POST SIZE/TYPE
LINE	STATION	OFFSET				
A-LINE	418+00	9.7' RT	INTERSECTION WARNING SYMBOL	W2-1	18" X 18"	2.25" STEEL SQUARE*
A-LINE	418+53	9.1' RT	ELST TRAIL RULES	CUSTOM	N/A	2.25" STEEL SQUARE*
A-LINE	418+53	9.1' RT	ELST TRAIL RULES	CUSTOM	N/A	N/A
A-LINE	419+16	9.1' RT	YIELD	R1-2	30" X 30"	2.25" STEEL SQUARE*
A-LINE	420+15	10.1' LT	INTERSECTION WARNING SYMBOL	W2-1	18" X 18"	2.25" STEEL SQUARE*
A-LINE	420+15	10.1' LT	INTERSECTION WARNING SYMBOL	W2-1	18" X 18"	2.25" STEEL SQUARE*

* SEE DETAIL 7 ON SHEET MD1 FOR SIGN SUPPORT

N.I.C.

CONTRACT NO. CO1281C18

REVISIONS	DATE	BY

DESIGNED M. TSUN
DRAWN B. PURGANAN
CHECKED D. PROCTOR
APPROVED C. BUITRAGO

ONE INCH AT FULL SCALE. IF NOT, SCALE ACCORDINGLY
FILE NAME PS1521075P23T14MD-01
JOB No. 554-1521-075 P23 T14
DATE MAY 2018

CRAIG ALEXANDER BUITRAGO
STATE OF WASHINGTON
49427
REGISTERED PROFESSIONAL ENGINEER
5-4-2018

Parametrix
ENGINEERING . PLANNING . ENVIRONMENTAL SCIENCES
719 2ND AVENUE, SUITE 200 | SEATTLE, WA 98104
P 206.394.3700
WWW.PARAMETRIX.COM

PROJECT NAME
EAST LAKE SAMMAMISH MASTER PLAN TRAIL
ZACKUSE CREEK CUVERT REPLACEMENTS
SAMMAMISH, WA

MISCELLANEOUS DETAILS

SHEET NO. 23 OF 23
MD2

PATH: U:\PSO\Projects\Clients\1521-KingCo\554-1521-075-ELST\99Svcs\CADD\Phase 23\Task 14\DWG\ PLOTTED BY: purgabut DATE: Wednesday, May 2, 2018 4:54:39 PM
LAYOUT: MD2