GENERAL NOTES

1. ALL MATERIAL AND WORKMANSHIP SHALL BE IN ACCORDANCE WITH THE REQUIREMENTS OF THE WASHINGTON STATE DEPARTMENT OF TRANSPORTATION STANDARD SPECIFICATIONS FOR ROAD, BRIDGE, AND MUNICIPAL CONSTRUCTION DATED 2016 AND AMENDMENTS.

2. ABBREVIATIONS:
   SEW: STRUCTURAL EARTH WALL
   WP: WORKING POINT

CONCRETE RETAINING WALL

1. MODULAR CONCRETE BLOCKS SHALL BE IN ACCORDANCE WITH SPECIAL PROVISIONS.

2. THE CONCRETE BLOCK RETAINING WALLS SHALL BE CONSTRUCTED WITH PRECAST MONOLITHIC CONCRETE BLOCKS WITH NOMINAL DIMENSIONS 2'-5 1/2"X2'-5 1/2"X4'-11". CHAMFER ALL EDGES. BLOCKS SHALL HAVE INTEGRAL SHEAR KEYS AND LIFT LOOPS. MAXIMUM CLEARANCE FOR SHEAR P KEY/POCKET IS ½". MINIMUM CONCRETE STRENGTH AT 28 DAYS – 4000 PSI. FLAT TOP BLOCKS ARE NOT ACCEPTABLE UNLESS OTHERWISE SPECIFIED.

3. ALL EXPOSED CONCRETE BLOCK FACES TO HAVE FINISHING CLASS 2 ACCORDING TO SPECIFICATION.

4. GEOTEXTILE/GEOGRID SHALL BE IN ACCORDANCE WITH THE SPECIAL PROVISIONS.

5. GEOGRID REINFORCEMENT TO BE PLACED BETWEEN EACH ROW OF BLOCKS AND TO EXTEND A MINIMUM LENGTH EQUAL TO 0.8 X WALL HEIGHT HORIZONTALLY INTO BACKFILL.

6. GEOGRID REINFORCEMENT TO BE TENSAR UX#### OR APPROVED EQUAL. TRIM EXPOSED GEOGRID.

7. CONTRACTOR TO SUBMIT SHOP DRAWINGS FOR CONCRETE BLOCK WALLS TO THE ENGINEER PRIOR TO CONSTRUCTION.

8. PLACE FILL MATERIAL IN 1 FT LIFTS AND COMPACT TO 95% STANDARD PROCTOR DENSITY UNLESS SPECIFIED OTHERWISE IN CONTRACT DOCUMENTS.

9. CLEAR AND GRUB EXISTING GROUND MINIMUM 6 INCH OR AS DIRECTED BY THE ENGINEER. PREPARED SUB-GRADE TO BE INSPECTED AND APPROVED BY CONTRACT ADMINISTRATOR PRIOR TO CONSTRUCTION

10. ALL CLEARED AND GRUBBED MATERIALS TO BE REMOVED FROM SITE.

11. SUB DRAIN SHALL BE AS SHOWN ON THE DRAWINGS. SUB DRAIN PIPE SHALL BE PERFORATED FLEXIBLE SUB DRAIN TUBING IN ACCORDANCE WITH SPECIFICATION.

12. RIPRAP FOR SPLASH PAD SHALL BE QUARRY SPLASH PAD WITH NOMINAL DIMENSIONS OF 5FTX5FTX1FT IN ACCORDANCE WITH SPECIAL PROVISIONS.

SOIL NAIL WALL CONSTRUCTION:

1. SOIL NAIL WALL SHALL BE IN ACCORDANCE WITH SPECIAL PROVISIONS.

2. THE CONTRACTOR SHALL PREPARE AND SUBMIT A PLAN AT LEAST 30 DAYS BEFORE START OF WALL CONSTRUCTION INCLUDING:
   - DRILL EQUIPMENT AND METHODOLOGY, INCLUDING HOLE AND BIT DIAMETER TO ACHIEVE SPECIFIED PULLOUT RESISTANCE.
   - SOIL NAIL GROUT MIX DESIGN, PUMP/INSTALLATION EQUIPMENT AND METHODOLOGY.
   - SOIL NAIL TESTING METHODS, TESTING SETUPS AND CALIBRATION CHARTS FOR ALL JACKS AND GAUGES PREPARED BY AN INDEPENDENT LABORATORY.
   - SEQUENCING IN GENERAL COMPLIANCE WITH NOTE 2, BELOW.

3. THE EXCAVATION AND CONSTRUCTION SEQUENCE SHALL BE AS FOLLOWS:
   - EXCAVATE TO A MINIMUM ELEVATION OF 1 ft ABOVE NAIL LEVEL, LEAVING AT LEAST A 2 ft MINIMUM TOP WIDTH BUTTRESS.
   - DRILL, FLUSH, AND GROUT IN ONE PROCESS PER SPECIAL PROVISIONS. FLUSHING CUTTINGS WITH WATER WHILE DRILLING IS NOT ACCEPTABLE.
   - EXCAVATE TO EXPOSE FINAL VERTICAL SOIL FACE TO A MAXIMUM DEPTH OF 3.5 ft BELOW SOIL NAIL.
   - INSTALL STRIP DRAINS VERTICALLY AGAINST GROUND AS SHOWN ON THE DRAWINGS. THE TOP OF THE DRAIN FOR THE FIRST ROW OF NAILS SHALL BE AT 1 ft BELOW THE TOP OF CUT. A FULL LENGTH OF DRAIN MAY BE INSTALLED AT THE FIRST NAIL AND THE EXCESS DRAIN MAY BE ROLLED, WRAPPED AND PROTECTED WITH PLASTIC SHEET NC AND LAID AT THE BOTTOM OF THE PANEL TO PROTECT IT FROM THE SHOTCRETE SPRAY. INSTALL ADDITIONAL DRAINS AS REQUIRED IN AREAS WHERE ANY SEEPAGE IS ENCOUNTERED. IN AREAS WHERE SEEPAGE IS ENCOUNTERED, THE ENGINEER MAY REQUIRE ADDITIONAL WORK SUCH AS FULL COVERAGE DRAINAGE PANEL AND/OR INSTALLATION OF HORIZONTAL DRAINS.
   - EXCAVATE REQUIRED BLISTER POCKETS.
   - PLACE WELDED STEEL WIRE MESH AND REINFORCING STEEL PINNED TO THE GROUND SUCH THAT THE MINIMUM 2 INCH SHOTCRETE COVER OF THE REINFORCEMENT IS ACHIEVED ON EITHER SIDE OF THE REINFORCING.
   - APPLY SHOTCRETE. COMPLETE EXCAVATION TO THE FINAL WALL EXCAVATION LINE AND APPLICATION OF THE SHOTCRETE IN THE SAME SHIFT.
   - INSTALL NAIL ANCHOR ASSEMBLY, ENSURING TIGHT CONTACT BETWEEN THE FRESH SHOTCRETE AND THE CONNECTOR PLATE AND TIGHTEN LOCK NUT TO SNUG TIGHT POSITION, THEN TIGHTEN NUT WITH TURN-OF-NUT METHOD BY AN ADDITIONAL TURN TO SECURELY SEAT IT.
   - EXCAVATE THE REMAINDER OF THE BENCH AND REPEAT INSTALLATION UNTIL ALL NAILS ARE INSTALLED WITHIN THE LIMIT OF EXCAVATION.
   - THE EXCAVATION FOR THE NEXT LEVEL OR ROW OF NAILS SHALL NOT COMMENCE UNTIL PROOF TESTING RESULTS HAVE BEEN SUBMITTED AND THE ENGINEER HAS GIVEN APPROVAL FOR CONTINUED EXCAVATION. THE ENGINEER RESERVES THE RIGHT TO TERMINATE THE EXCAVATION AND/OR SHORING AND NAIL INSTALLATION AT ANY TIME IF GROUND MOVEMENTS EXCEED ACCEPTABLE LIMITS. EXCAVATE TO NEXT LEVEL. NEXT LEVEL EXCAVATION SHALL NOT COMMENCE UNTIL TESTING OF PRESENT LEVEL IS COMPLETE.
   - FOR EACH ROW OF NAILS, EXCAVATION ALONG THE PERIMETER SHALL NOT LEAVE ANY VERTICAL CUTS EXPOSED OVERNIGHT UNLESS SUPPORTED BY SHOTCRETE AND NAILS (WITH NAIL NUT HAND TIGHTENED AS A MINIMUM) OR A SOIL BUTTRESS.

4. CHANGES TO THE ORIGINAL PLAN, PROPOSED BY THE CONTRACTOR DURING CONSTRUCTION AND REFLECTING SOIL, EQUIPMENT, WEATHER AND OTHER FACTORS, SHALL BE SUBMITTED TO THE ENGINEER AND APPROVED PRIOR TO IMPLEMENTING CHANCES.

5. TEST NAILS
   - THE CONTRACTOR SHALL PROVIDE FOR TEST NAILS AND CARRY OUT ALL REQUIRED
   - TESTING AS SHOWN ON THE DRAWINGS AND DESCRIBED IN THE SPECIAL PROVISIONS.
   - A DRILL HOLE SHALL BE PROVIDED FOR THE UNBONDED LENGTH THAT WILL BE
   - RESISTANT TO COLLAPSING AND CAN BE GROUTED UPON COMPLETION OF TESTING.
   - AFTER GROUT HAS CURED SUFFICIENTLY, PROOF LOAD NAILS IN ACCORDANCE WITH SPECIAL PROVISIONS.
   - POST GROUT THE ANCHOR HEADS AS SHOWN ON THE DRAWINGS THROUGH THE LOWER HOLE IN THE ANCHOR PLATE UNTIL GROUT COMES OUT THROUGH THE UPPER VENT HOLE IN THE ANCHOR PLATE.

60% SUBMITTAL

P:\2015\1527 huitt zollars boise creek arch bridge\02-CADD\Sheets\amendment 8\ 1527 - Boise Creek Arch Bridge - S100 GENERAL STRUCTURAL NOTES - Amendment 8.dwg Thursday, September 08, 2016 8:14am

King County
Department of Natural Resources and Parks
Parks and Recreation Division
King Street Center, KSC-NR-0700
201 So. Jackson Street, Suite 700
Seattle, Washington 98104
Telephone: (206) 477-4527
Fax: (206) 263-6217

exeltech
8729 Commerce Pl. Dr. NE
Lacey, WA 98516
(360) 357-8289
www.xltech.com

SAEED JAVIDI NIROOMAND
STATE OF WASHINGTON
53098
REGISTERED PROFESSIONAL ENGINEER

FOOTHILLS TRAIL
TRAIL IMPROVEMENTS - PHASE II
KING COUNTY DEPT. OF NATURAL RESOURCES & PARKS

ISSUE / REVISIONS

ID	DATE	DESCRIPTION
1	6/2/16	30% SUBMITTAL
2	7/27/16	60% SUBMITTAL

PROJECT NO. 1527
SITE NO.
FILE
CONTRACT NO. E00115E08 - AM. 8
DRAWN BY BIP CHECKED BY SJN
SHEET TITLE
GENERAL STRUCTURAL NOTES

S-100

X OF X

SEC. 26, 34 & 35, T 20 N, R 6 E, W.M.

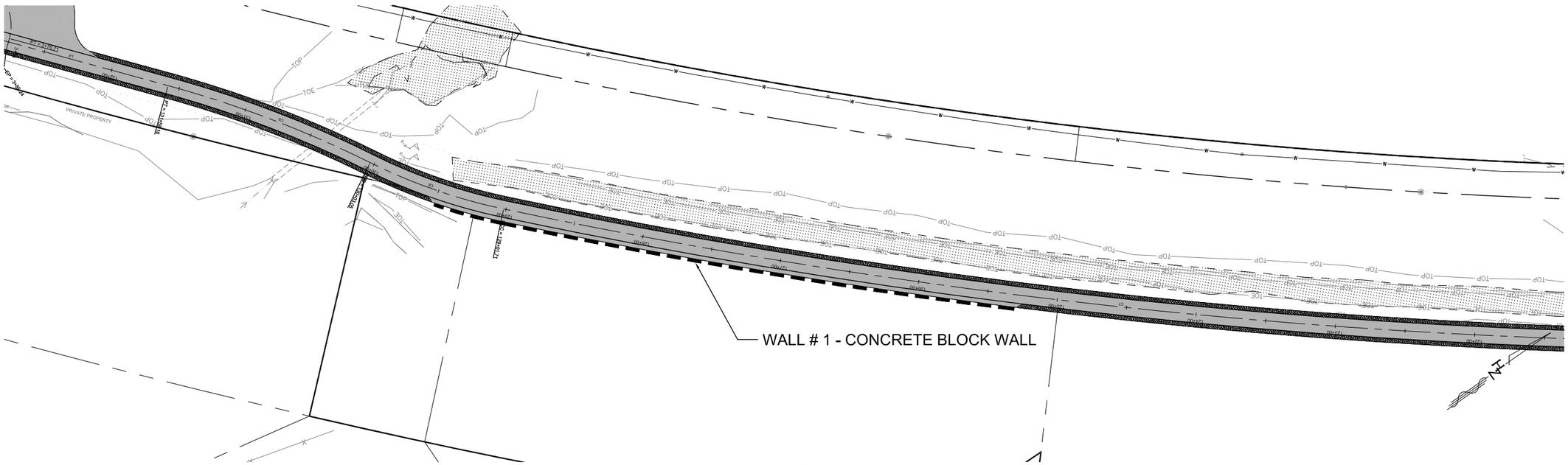

PLAN

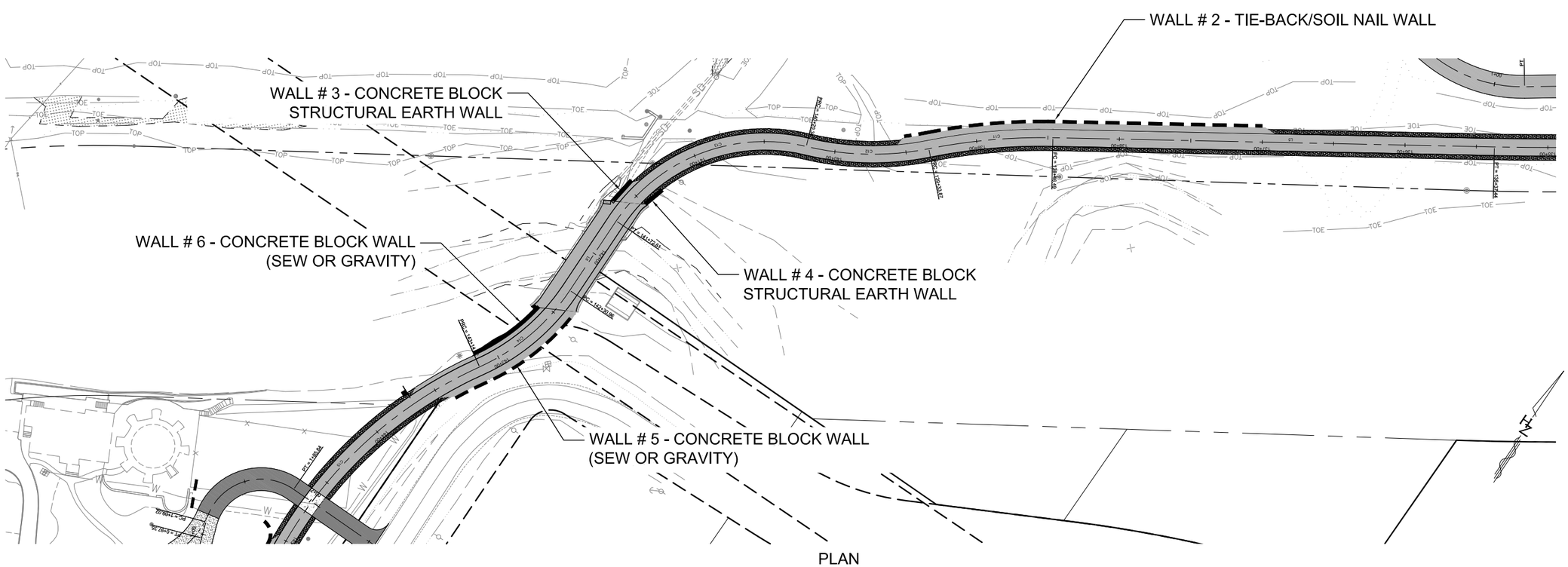

PLAN

60% SUBMITTAL

SCALE (IN FEET)
0 20 40 80

King County
Department of Natural Resources and Parks
Parks and Recreation Division
King Street Center, KSC-NR-0700
201 So. Jackson Street, Suite 700
Seattle, Washington 98104
Telephone: (206) 477-4527
Fax: (206) 263-6217

exeltech
8729 Commerce Pl. Dr. NE
Lacey, WA 98516
(360) 357-8289
www.xtech.com

SAEED JAVIDI NIKRAMAND
STATE OF WASHINGTON
53998
REGISTERED PROFESSIONAL ENGINEER

FOOTHILLS TRAIL

TRAIL IMPROVEMENTS - PHASE II

KING COUNTY DEPT. OF NATURAL RESOURCES & PARKS

ISSUE / REVISIONS

ID	DATE	DESCRIPTION
1	6/2/16	30% SUBMITTAL
2	7/27/16	60% SUBMITTAL

PROJECT NO. 1527
SITE NO.
FILE
CONTRACT NO. E00115E08 - AM. 8
DRAWN BY BIP CHECKED BY SJN
SHEET TITLE
RETAINING WALLS
PLAN
WALLS 1-6

S-101

X OF X

P:\2015\1527 hullt zollars boise creek arch bridge\02-CADD\Sheets\amendment 8\ 1527 - Boise Creek Arch Bridge - S101 Retaining Walls - Amendment 8.dwg Thursday, September 08, 2016 8:16am

SEC. 26, 34 & 35, T 20 N, R 6 E, W.M.

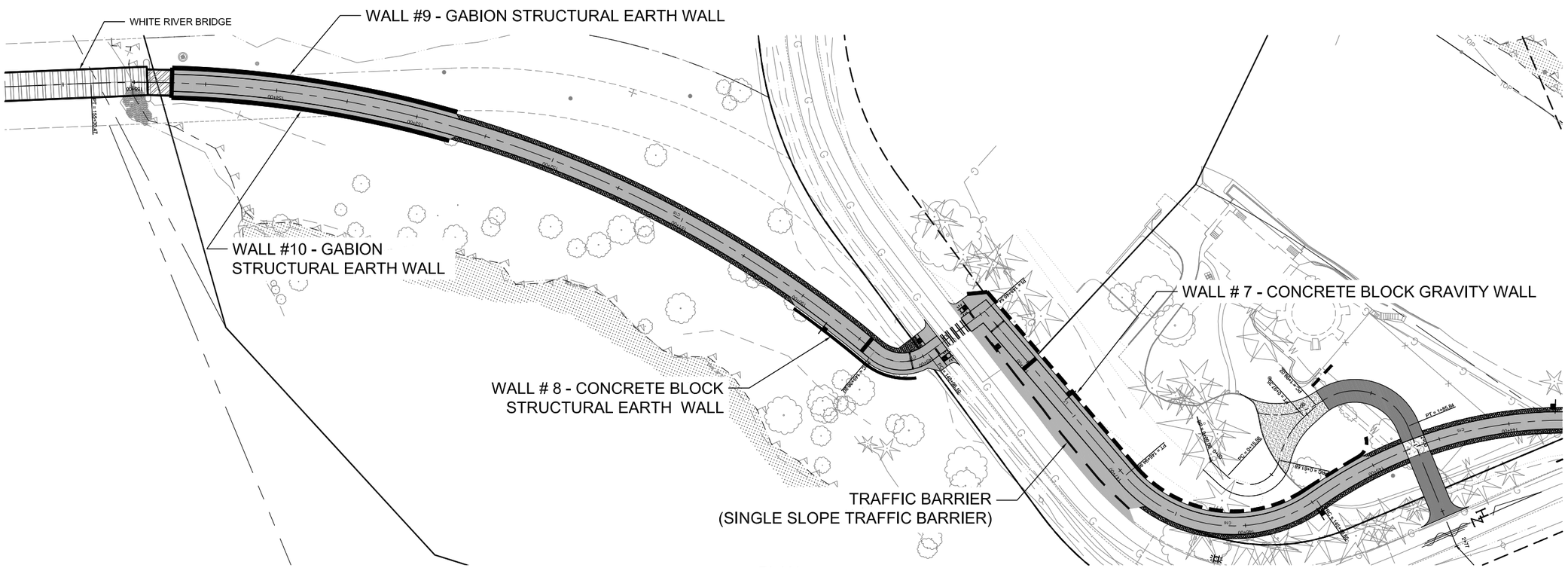

PLAN

60% SUBMITTAL

SCALE (IN FEET)
0 20 40 80

King County
Department of Natural Resources and Parks
Parks and Recreation Division
King Street Center, KSC-NR-0700
201 So. Jackson Street, Suite 700
Seattle, Washington 98104
Telephone: (206) 477-4527
Fax: (206) 263-6217

exeltech
8729 Commerce Pl. Dr. NE
Lacey, WA 98516
(360) 357-8289
www.xltech.com

SAEED JAVIDI NIKRAMAND
STATE OF WASHINGTON
53998
REGISTERED PROFESSIONAL ENGINEER

FOOTHILLS TRAIL
TRAIL IMPROVEMENTS - PHASE II
KING COUNTY DEPT. OF NATURAL RESOURCES & PARKS

ISSUE / REVISIONS

ID	DATE	DESCRIPTION
1	6/2/16	30% SUBMITTAL
2	7/27/16	60% SUBMITTAL

PROJECT NO. 1527
SITE NO.
FILE
CONTRACT NO. E00115E08 - AM. 8
DRAWN BY BIP CHECKED BY SJN
SHEET TITLE
RETAINING WALLS
PLAN
WALLS 7-10

S-102

X OF X

P:\2015\1527 hult zoltans boise creek arch bridge\02-CADD\Sheets\amendment 8\ 1527 - Boise Creek Arch Bridge - S102 Retaining Walls Amendment 8.dwg Thursday, September 08, 2016 8:19am

SEC. 26, 34 & 35, T 20 N, R 6 E, W.M.

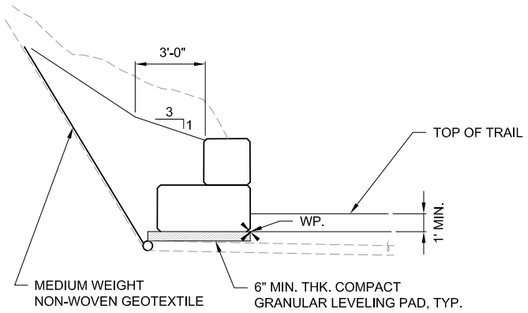

WALL #1 - CONCRETE BLOCK WALL

(HEIGHT: 2.5' - 5')

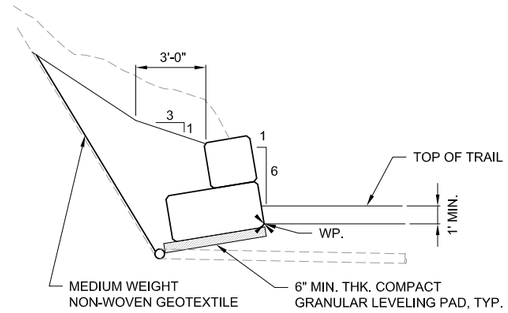

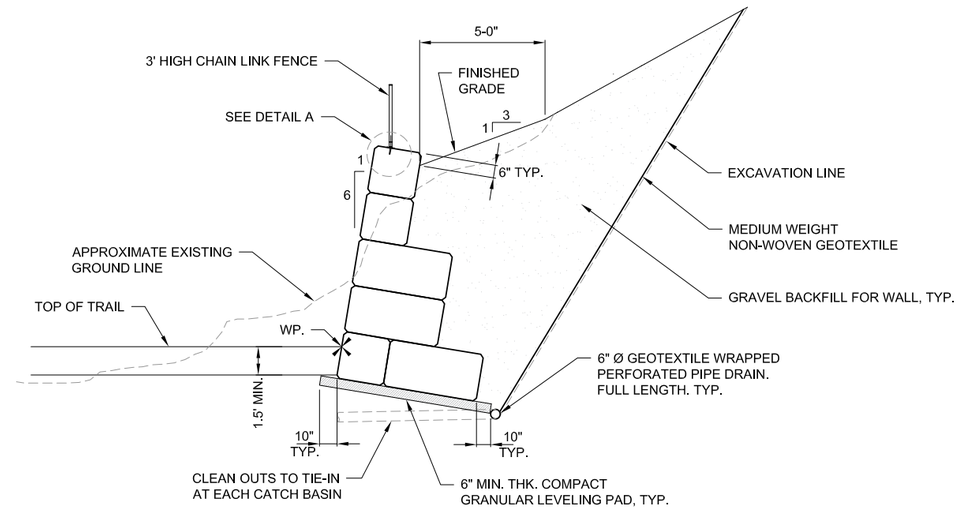

WALL #7, ALT. #1 FOR WALL #5 & #6 - CONCRETE BLOCK GRAVITY WALL

(HEIGHT: 5' - 12.5')

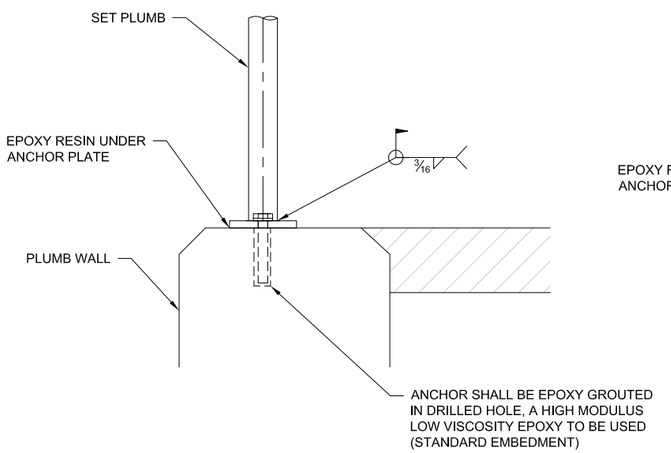

DETAIL B - ANCHOR PLATE

NTS

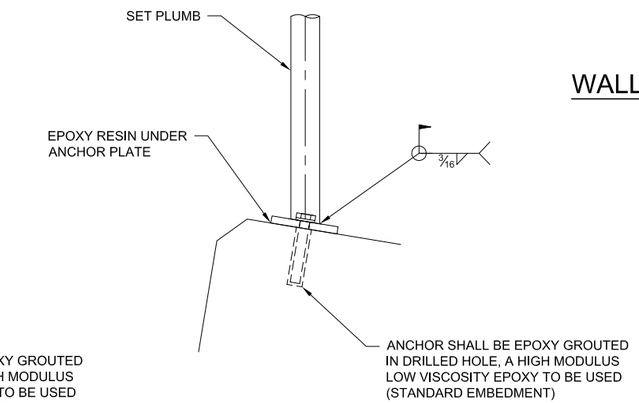

DETAIL A - ANCHOR PLATE

NTS

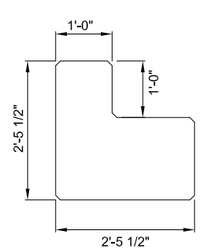

BENCH BLOCK DETAIL

NTS

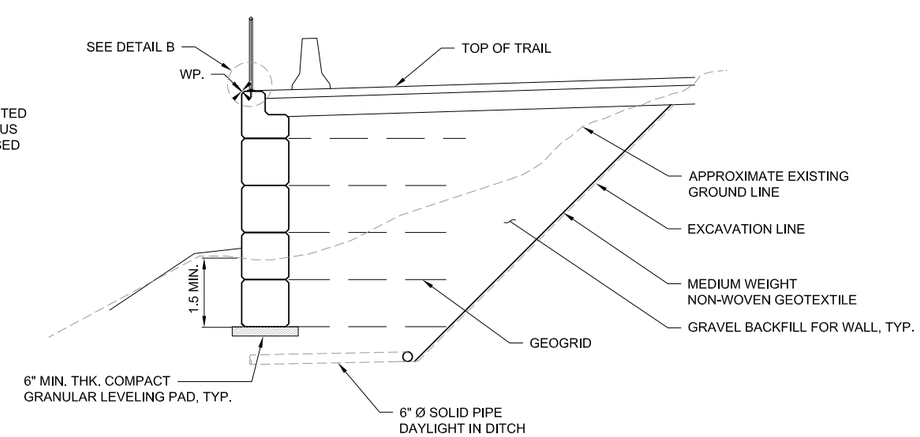

WALL #8, ALT. #2 FOR WALL #5 & #6 - CONCRETE BLOCK STRUCTURAL EARTH WALL

60% SUBMITTAL

P:\2015\1527 halitt zollars boise creek arch bridge\02-CADD\Sheets\amendment 6\ 1527 - Boise Creek Arch Bridge - S103 Retaining Walls - Typical Section.dwg Thursday, September 08, 2016 8:28am

King County
Department of Natural Resources and Parks
Parks and Recreation Division
King Street Center, KSC-NR-0700
201 So. Jackson Street, Suite 700
Seattle, Washington 98104
Telephone: (206) 477-4527
Fax: (206) 263-6217

exeltech
8729 Commerce Pl. Dr. NE
Lacey, WA 98516
(360) 357-8289
www.xltech.com

SAEED JAVIDI NIROOMAND
STATE OF WASHINGTON
53098
REGISTERED PROFESSIONAL ENGINEER

FOOTHILLS TRAIL

TRAIL IMPROVEMENTS - PHASE II

KING COUNTY DEPT. OF NATURAL RESOURCES & PARKS

ISSUE / REVISIONS

ID	DATE	DESCRIPTION
1	6/2/16	30% SUBMITTAL
2	7/27/16	60% SUBMITTAL

PROJECT NO. 1527
SITE NO.
FILE
CONTRACT NO. E00115E08 - AM. 8
DRAWN BY BIP CHECKED BY SJN
SHEET TITLE
RETAINING WALL DETAILS

S-103

X OF X

SEC. 26, 34 & 35, T 20 N, R 6 E, W.M.

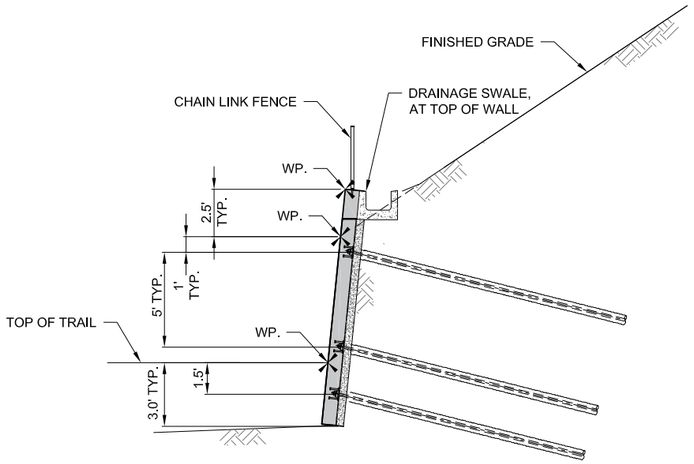

WALL #2 - TIE-BACK/SOIL NAIL WALL

(HEIGHT: 5' - 10')

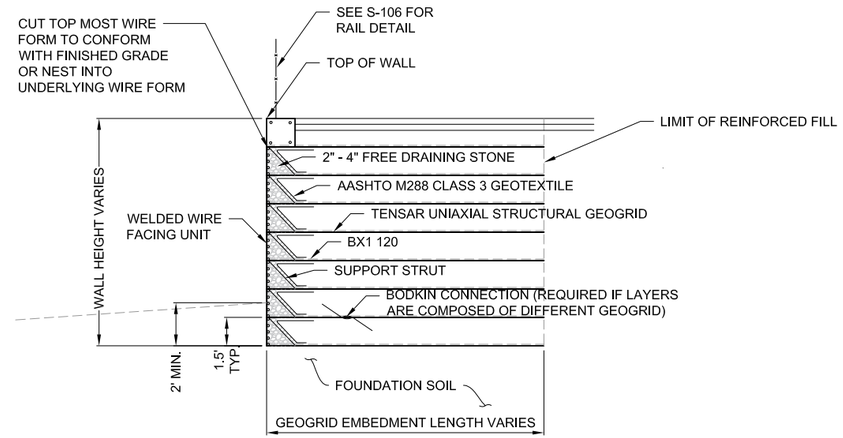

WALL #9 AND #10 GABION STRUCTURAL EARTH WALL

(HEIGHT: 10' - 15')

60% SUBMITTAL

P:\2015\1527 halft zollars boise creek arch bridge\02-CADD\Sheets\amendment 8\ 1527 - Boise Creek Arch Bridge - S104 Retaining Walls - Typical Section.dwg Thursday, September 08, 2016 8:36am

King County
Department of Natural Resources and Parks
Parks and Recreation Division
King Street Center, KSC-NR-0700
201 So. Jackson Street, Suite 700
Seattle, Washington 98104
Telephone: (206) 477-4527
Fax: (206) 263-6217

exeltech
8729 Commerce Pl. Dr. NE
Lacey, WA 98516
(360) 357-8289
www.xltech.com

SAEED JAVIDI NIROMAND
STATE OF WASHINGTON
53098
REGISTERED PROFESSIONAL ENGINEER

FOOTHILLS TRAIL
TRAIL IMPROVEMENTS - PHASE II
KING COUNTY DEPT. OF NATURAL RESOURCES & PARKS

ISSUE / REVISIONS

ID	DATE	DESCRIPTION
1	6/2/16	30% SUBMITTAL
2	7/27/16	60% SUBMITTAL

PROJECT NO. 1527
SITE NO.
FILE
CONTRACT NO. E00115E08 - AM. 8
DRAWN BY BIP CHECKED BY SJN
SHEET TITLE
RETAINING WALL DETAILS

S-104

X OF X

SEC. 26, 34 & 35, T 20 N, R 6 E, W.M.

NOTES:
CONCRETE PRECAST BLOCK WALL

1. PRECAST CONCRETE BLOCKS SHALL BE IN ACCORDANCE WITH SPECIAL PROVISIONS.
2. CONSTRUCT RETAINING WALL OF PRECAST MONOLITHIC CONCRETE BLOCKS WITH NOMINAL DIMENSIONS 2'-5 $\frac{1}{2}$" X 2"-5 $\frac{1}{2}$" X 4'-11". CHAMFER ALL EDGES. BLOCKS SHALL HAVE INTEGRAL SHEAR KEYS AND LIFT LOOPS. MAXIMUM CLEARANCE FOR SHEAR KEY/POCKET IS 0.5 IN. MINIMUM CONCRETE STRENGTH AT 28 DAYS = 4 KSI. FLAT TOP BLOCKS ARE NOT ACCEPTABLE.
3. TOP ROW OF CONCRETE BLOCKS TO BE PRECAST BENCH BLOCKS WITH NOMINAL NOTCH DIMENSIONS 1.5'x1' (FT) AS SHOWN.
4. CONTRACTOR TO SUBMIT SHOP DRAWINGS FOR CONCRETE BLOCK WALLS TO CONTRACT ADMINISTRATOR PRIOR TO CONSTRUCTION.
5. GEOGRID REINFORCEMENT TO BE PLACED BETWEEN EACH ROW OF BLOCKS AND TO EXTEND A MINIMUM LENGTH SHOWN. GEOGRID REINFORCEMENT TO BE TENSAR UX#### OR APPROVED EQUAL. TRIM EXPOSED GEOGRID.
6. CONTRACTOR TO DEMOLISH AND REMOVE EXISTING DAMAGED CONCRETE DECK PANEL AS NECESSARY TO PROPERLY INSTALL THE NEW CONCRETE BLOCK RETAINING WALL.

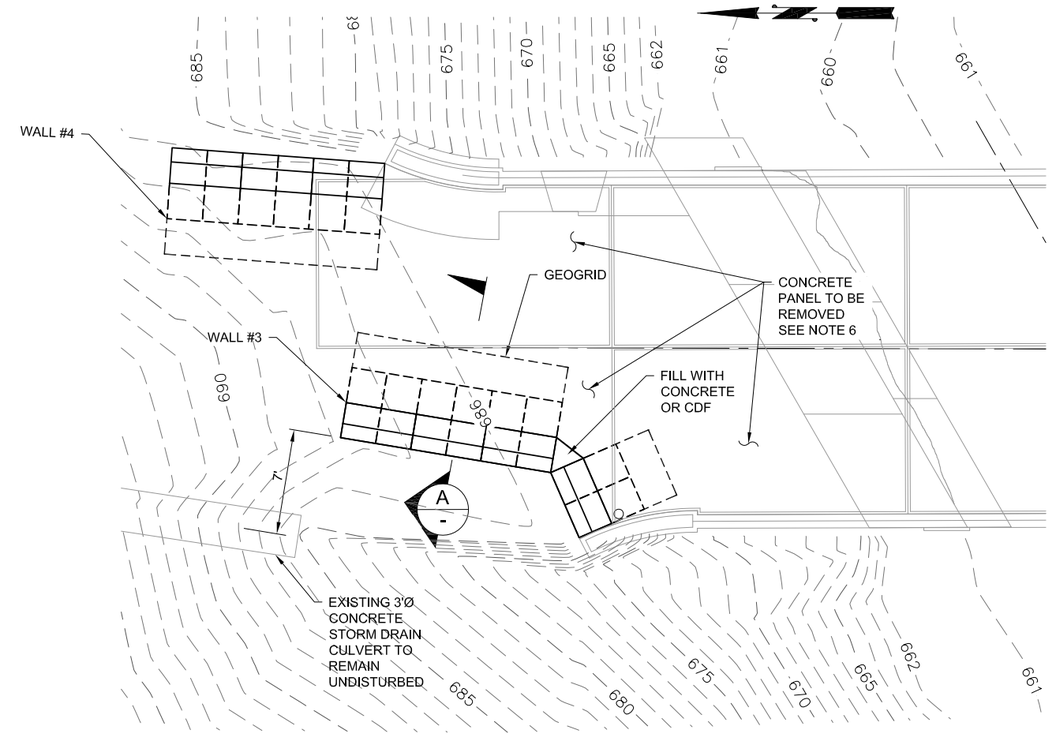

PLAN - BOISE CREEK BRIDGE

SCALE $\frac{3}{16}$" = 1'-0"

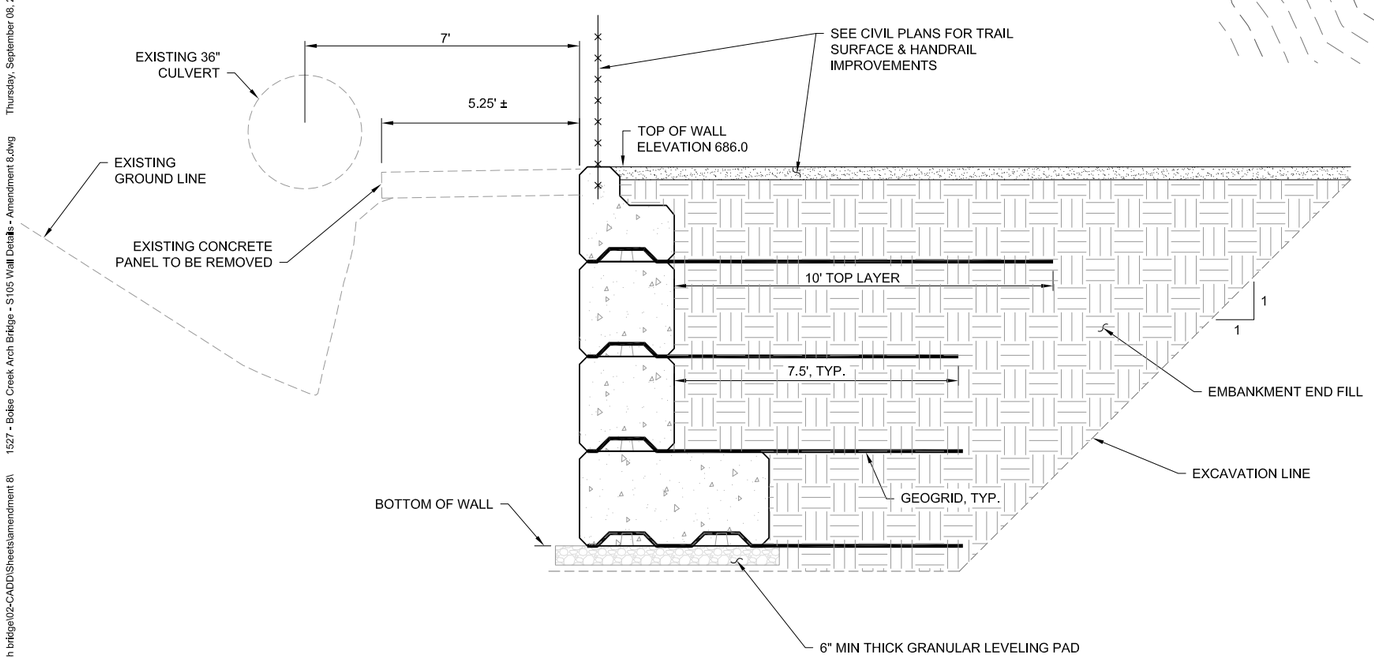

SECTION A
SCALE: 1"=2'-0"

WALL #3 SECTION (WALL #4 SIMILAR)

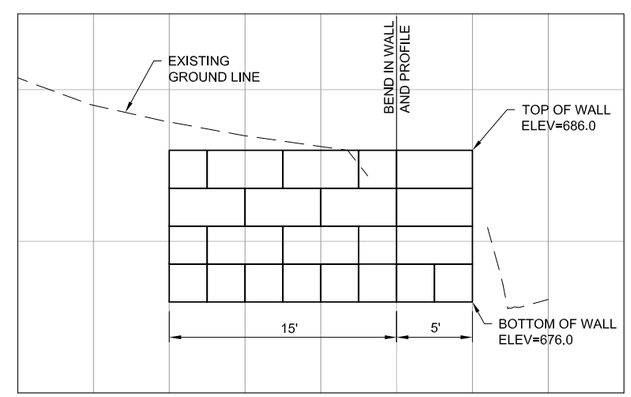

WALL #3 ELEVATION

60% SUBMITTAL

P:\2015\1527 hulft zollars boise creek arch bridge\02-CADD\Sheets\amendment 8\ 1527 - Boise Creek Arch Bridge - S105 Wall Details - Amendment 8.dwg Thursday, September 08, 2016 8:37am

King County
Department of Natural Resources and Parks
Parks and Recreation Division
King Street Center, KSC-NR-0700
201 So. Jackson Street, Suite 700
Seattle, Washington 98104
Telephone: (206) 477-4527
Fax: (206) 263-6217

exeltech
8729 Commerce Pl. Dr. NE
Lacey, WA 98516
(360) 357-8289
www.xltech.com

SAEED JAVIDI NIROOMAND
STATE OF WASHINGTON
53998
REGISTERED PROFESSIONAL ENGINEER

FOOTHILLS TRAIL
TRAIL IMPROVEMENTS - PHASE II
KING COUNTY DEPT. OF NATURAL RESOURCES & PARKS

ISSUE / REVISIONS

ID	DATE	DESCRIPTION
1	6/2/16	30% SUBMITTAL
2	7/27/16	60% SUBMITTAL

PROJECT NO. 1527
SITE NO.
FILE
CONTRACT NO. E00115E08 - AM. 8
DRAWN BY BIP CHECKED BY SJN
SHEET TITLE
BOISE CR BRIDGE RETAINING WALL #3 DETAILS

S-105

X OF X

SEC. 26, 34 & 35, T 20 N, R 6 E, W.M.

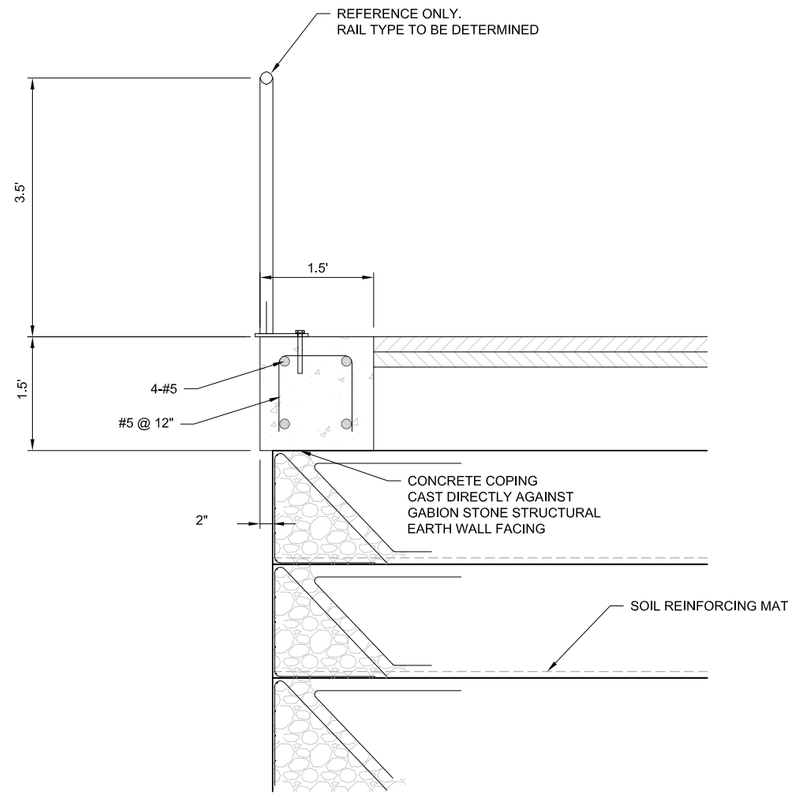

TRAIL PEDESTRIAN RAIL

NTS

60% SUBMITTAL

P:\2015\1527 huitt zollars boise creek arch bridge\02-CADD\Sheets\amendment 8\ 1527 - Boise Creek Arch Bridge - S106 Retaining Walls - Typical Section.dwg Thursday, September 08, 2016 8:39am

King County
Department of Natural Resources and Parks
Parks and Recreation Division
King Street Center, KSC-NR-0700
201 So. Jackson Street, Suite 700
Seattle, Washington 98104
Telephone: (206) 477-4527
Fax: (206) 263-6217

exeltech
8729 Commerce Pl. Dr. NE
Lacey, WA 98516
(360) 357-8289
www.xtech.com

SAEED JAVIDI NIROOMAND
STATE OF WASHINGTON
53098
REGISTERED PROFESSIONAL ENGINEER

FOOTHILLS TRAIL
TRAIL IMPROVEMENTS - PHASE II
KING COUNTY DEPT. OF NATURAL RESOURCES & PARKS

ISSUE / REVISIONS

ID	DATE	DESCRIPTION
1	6/2/16	30% SUBMITTAL
2	7/27/16	60% SUBMITTAL

PROJECT NO. 1527
SITE NO.
FILE
CONTRACT NO. E00115E08 - AM. 8
DRAWN BY BIP CHECKED BY SJN
SHEET TITLE
TRAIL PEDESTRIAN RAIL

S-106

X OF X

SEC. 26, 34 & 35, T 20 N, R 6 E, W.M.

WORK DESCRIPTION (NOT CONSTRUCTION SEQUENCE)

1. CONCRETE DECK PATCHING (AREAS WILL BE DETERMINED BY ENGINEER)
2. FULL/PARTIAL DEMOLISH AND REMOVE DECK PANELS AND RE-INSTATE
3. EXCAVATION, FILL, AND COMPACTION
4. TRAIL RETAINING WALL
5. PARAPET UPGRADE (STEEL HANDRAIL INSTALLATION)
6. RESTRICTED VEHICLE SIGN
7. CONCRETE CLEANING TO REMOVED THE EFFLORESCENCE, SURFACE VEGETATION AND GRAFFITI
8. CONCRETE CRACK REPAIR/INJECTION
9. REPLACE DECK PANEL JOINT SEALANTS

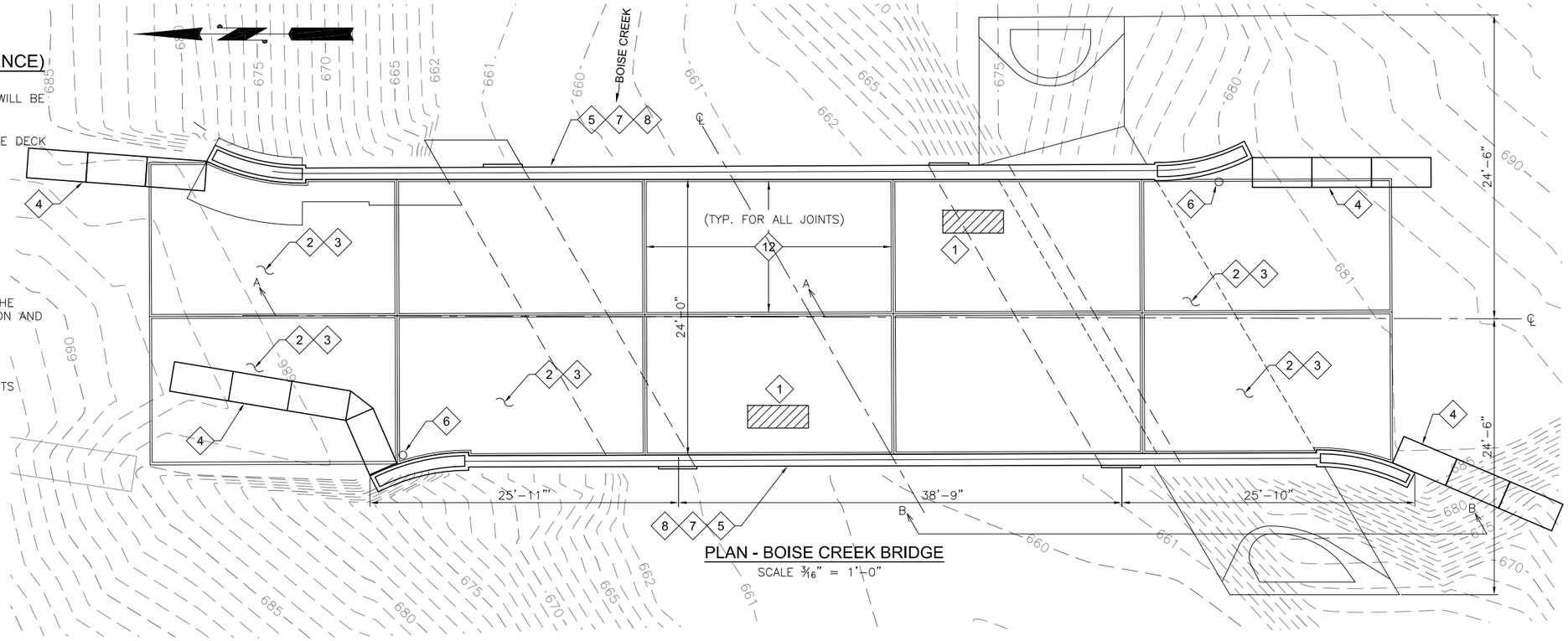

PLAN - BOISE CREEK BRIDGE

SCALE 3/16" = 1'-0"

NOTES:

1. ALL DIMENSIONS SHOWN FOR THE EXISTING CONDITIONS ARE COMPONENTS HAVE BEEN TAKEN FROM RECORD DRAWINGS AND TO BE CONFIRMED ON SITE BY THE CONTRACTOR PRIOR TO FABRICATION OR CONSTRUCTION.

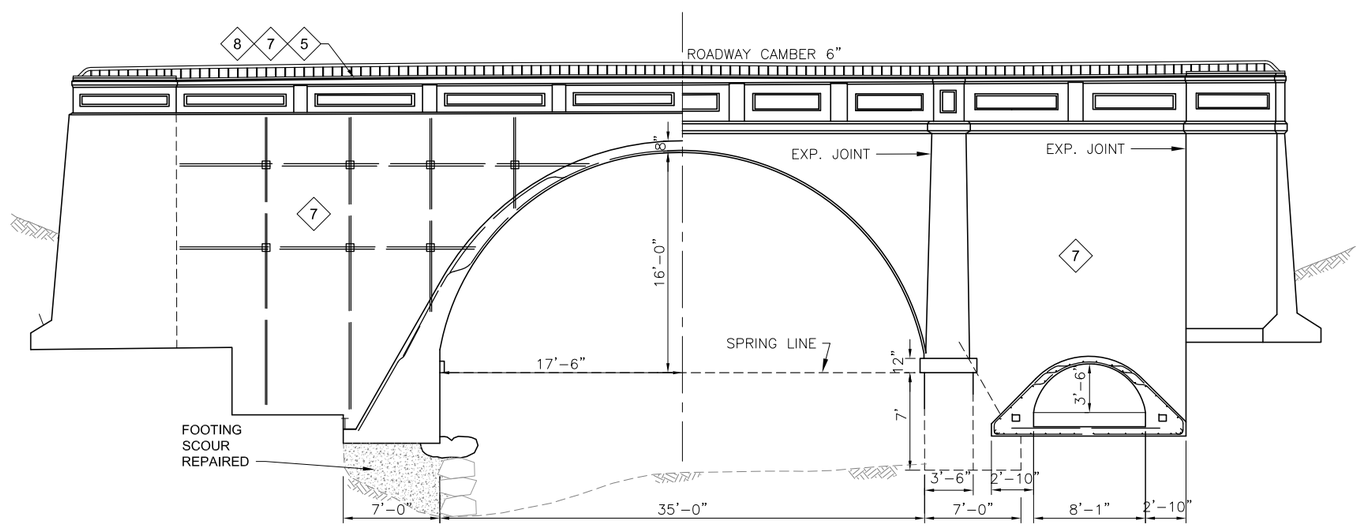

HALF SECTION AA HALF SECTION BB

ELEVATION - BOISE CREEK BRIDGE

SCALE 3/16" = 1'-0"

60% SUBMITTAL

P:\2015\1527 halitt zollars boise creek arch bridge\02-CADD\Sheets\amendment 8\ 1527 - Boise Creek Arch Bridge - S107 Repair Plan.dwg Thursday, September 08, 2016 9:02am

King County
Department of Natural Resources and Parks
Parks and Recreation Division
King Street Center, KSC-NR-0700
201 So. Jackson Street, Suite 700
Seattle, Washington 98104
Telephone: (206) 477-4527
Fax: (206) 263-6217

exeltech
8729 Commerce Pl. Dr. NE
Lacey, WA 98516
(360) 357-8289
www.xltech.com

SAEED JAVIDI NIROOMAND
STATE OF WASHINGTON
53098
REGISTERED PROFESSIONAL ENGINEER

FOOTHILLS TRAIL
TRAIL IMPROVEMENTS - PHASE II
KING COUNTY DEPT. OF NATURAL RESOURCES & PARKS

ISSUE / REVISIONS		
ID	DATE	DESCRIPTION
1	6/2/16	30% SUBMITTAL
2	7/27/16	60% SUBMITTAL

PROJECT NO. 1527
SITE NO.
FILE
CONTRACT NO. E00115E08 - AM. 8
DRAWN BY X CHECKED BY X
SHEET TITLE
BOISE CREEK BRIDGE REPAIR PLAN

S-107

X OF X

SEC. 26, 34 & 35, T 20 N, R 6 E, W.M.

NOTES:

1. FOR GENERAL NOTES, SEE DWG S-100.
2. COMPLETE ALL REPAIRS IN ACCORDANCE WITH SPECIAL PROVISIONS.
3. ALL CRACKS WITH A WIDTH GREATER THAN 0.02 IN. TO BE EPOXY INJECTED.
4. FOR ALL MAJOR DELAMINATION AND SPALLING, PLYWOOD FORMWORK SHALL BE USED IN ALL REPAIR PATCHES.
   - MINOR DELAMINATION: UNSOUND CONCRETE WITH LESS THAN 1 IN. DEEP WITH PARTIAL OR NO BAR EXPOSURE.
   - MAJOR DELAMINATION: UNSOUND CONCRETE OR SPALLING MORE THAN 1 IN. DEEP.

   FOR MINOR DELAMINATION OR LIGHT SPALLING LESS THAN 1 IN. DEEP, REMOVE DELAMINATED AREA, LOOSE PARTICLES AND BRUISED CONCRETE. PATCH AREA ACCORDING TO SPECIFICATION.
5. FOR MAJOR DELAMINATION OR SPALLING MORE THAN 1 IN. DEEP, REMOVE DELAMINATED AREA, LOOSED PARTICLES AND BRUISED CONCRETE. WHERE REINFORCEMENT EXPOSED, REMOVE 0.5 IN. CONCRETE BEYOUND THE BAR AND REMOVE ALL CORROSION PRODUCTS FOR BAR USING WIRE BRUSH. USE PLYWOOD FORMWORK TO REPAIR ACCORDING TO SPECIFICATIONS.
6. THE EDGES OF ALL CONCRETE REPAIRS SHALL BE SAW CUT A MIINIMUM DEPTH OF 0.5 IN. TO PREVENT FEATHERED EDGES. MINIMUM PATCH DEPTH OF ⅛".

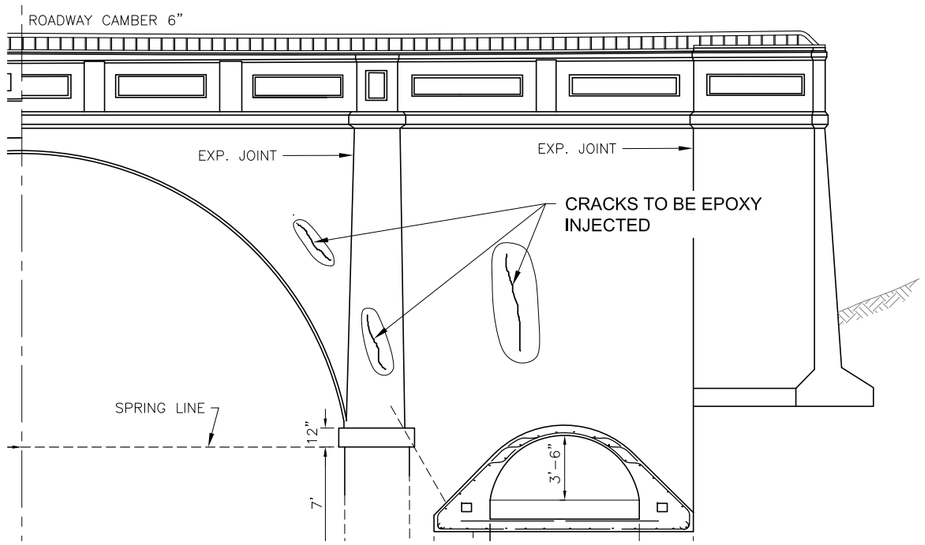

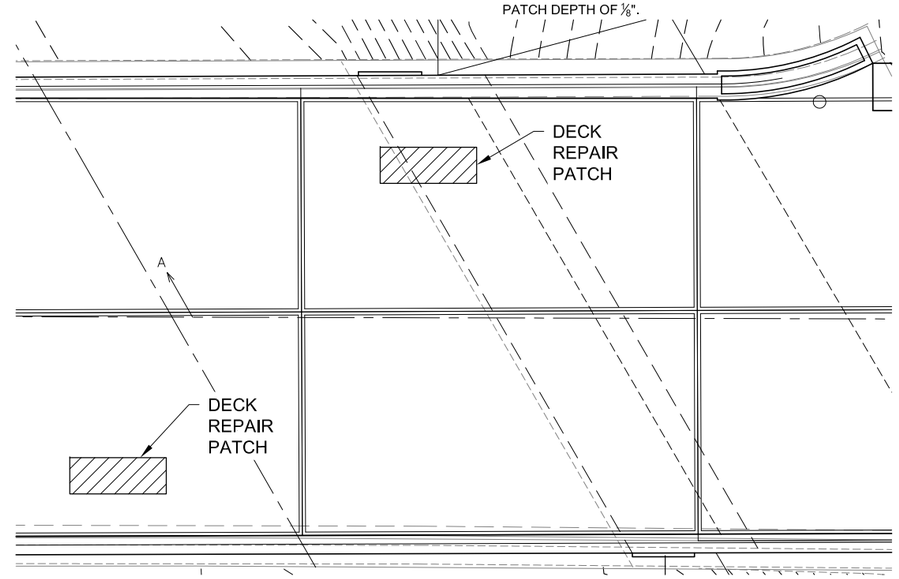

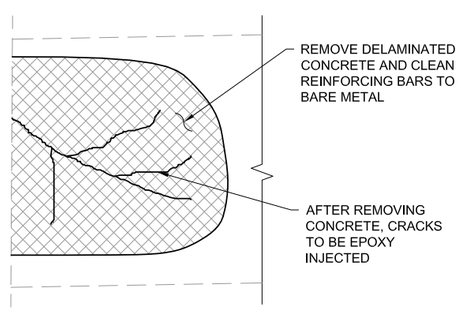

TYPICAL CRACK REPAIR
NTS

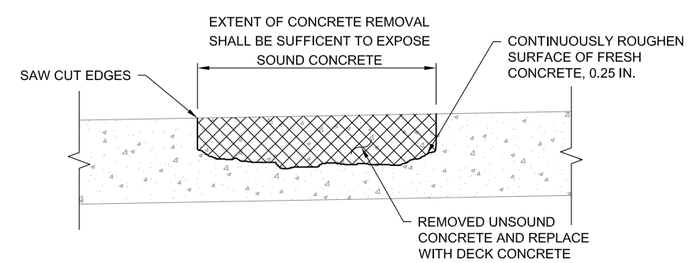

TYPICAL PARTIAL DEPTH DECK REPAIR
NTS

60% SUBMITTAL

King County
Department of Natural Resources and Parks
Parks and Recreation Division
King Street Center, KSC-NR-0700
201 So. Jackson Street, Suite 700
Seattle, Washington 98104
Telephone: (206) 477-4527
Fax: (206) 263-6217

exeltech
8720 Commerce Pl. Dr. NE
Lacey, WA 98516
(360) 357-8289
www.xltech.com

SAEED JAVIDI NIKRAMAD
STATE OF WASHINGTON
53098
REGISTERED PROFESSIONAL ENGINEER

FOOTHILLS TRAIL
TRAIL IMPROVEMENTS - PHASE II
KING COUNTY DEPT. OF NATURAL RESOURCES & PARKS

ISSUE / REVISIONS		
ID	DATE	DESCRIPTION
1	6/2/16	30% SUBMITTAL
2	7/27/16	60% SUBMITTAL

PROJECT NO. 1527
SITE NO.
FILE
CONTRACT NO. E00115E08 - AM. 8
DRAWN BY X CHECKED BY X
SHEET TITLE
BOISE CREEK BRIDGE REPAIR DETAILS SHEET 1 OF 2

S-108

X OF X

P:\2015\1527 huitt zollars boise creek arch bridge\02-CADD\Sheets\amendment 8\ 1527 - Boise Creek Arch Bridge - S108 S109 Repair Plan - Repair Details - Amendment 8.dwg Thursday, September 08, 2016 8:45am

SEC. 26, 34 & 35, T 20 N, R 6 E, W.M.

CONCRETE CLEANING TO REMOVE THE EFFORESCENCE AND SURFACE VEGETATION FROM CONCRETE SURFACE

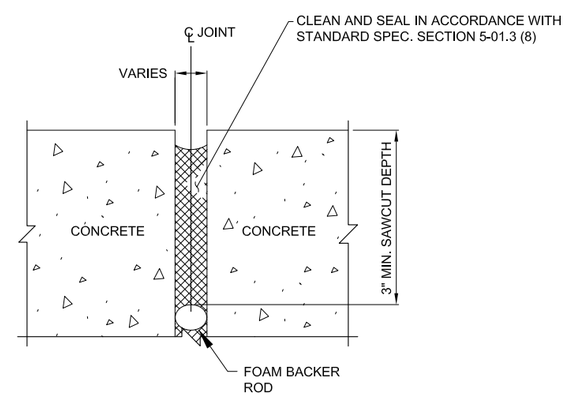

CONCRETE OPEN JOINT

NTS

60% SUBMITTAL

P:\20151\1527 hutt zollars boise creek arch bridge\02-CADD\Sheets\amendment 8\ 1527 - Boise Creek Arch Bridge - S108 S109 Repair Plan - Repair Details - Amendment 8.dwg Thursday, September 08, 2016 8:50am

King County

Department of Natural Resources and Parks
Parks and Recreation Division

King Street Center, KSC-NR-0700
201 So. Jackson Street, Suite 700
Seattle, Washington 98104
Telephone: (206) 477-4527
Fax: (206) 263-6217

exeltech
8729 Commerce Pl. Dr. NE
Lacey, WA 98516
(360) 357-8289
www.xltech.com

SAEED JAVIDI NIRAMAND
STATE OF WASHINGTON
53098
REGISTERED PROFESSIONAL ENGINEER

FOOTHILLS TRAIL

TRAIL IMPROVEMENTS - PHASE II

KING COUNTY DEPT. OF NATURAL RESOURCES & PARKS

ISSUE / REVISIONS		
ID	DATE	DESCRIPTION
1	6/2/16	30% SUBMITTAL
2	7/27/16	60% SUBMITTAL

PROJECT NO. 1527
SITE NO.
FILE
CONTRACT NO. E00115E08 - AM. 8
DRAWN BY BIP CHECKED BY SJN
SHEET TITLE
BOISE CREEK
BRIDGE
REPAIR DETAILS
SHEET 2 OF 2

S-109

X OF X

SEC. 26, 34 & 35, T 20 N, R 6 E, W.M.

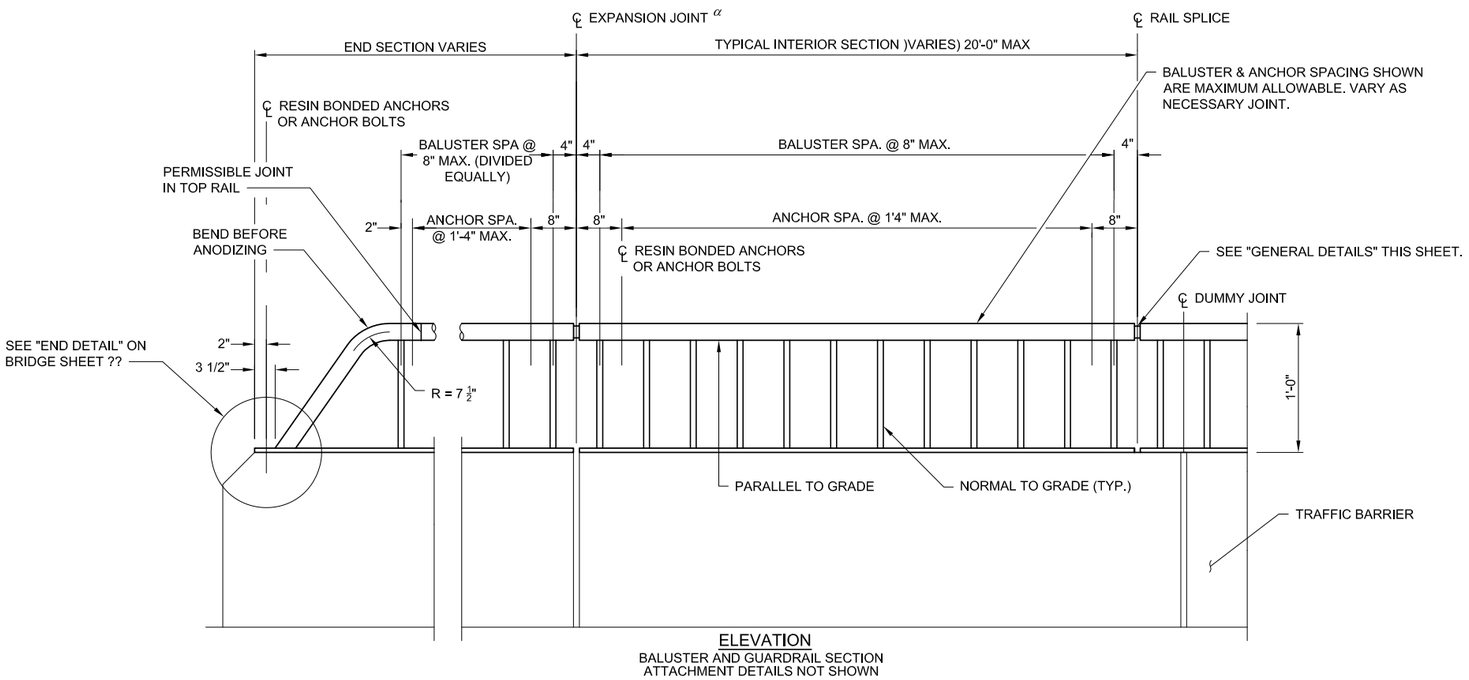

ELEVATION
BALUSTER AND GUARDRAIL SECTION
ATTACHMENT DETAILS NOT SHOWN

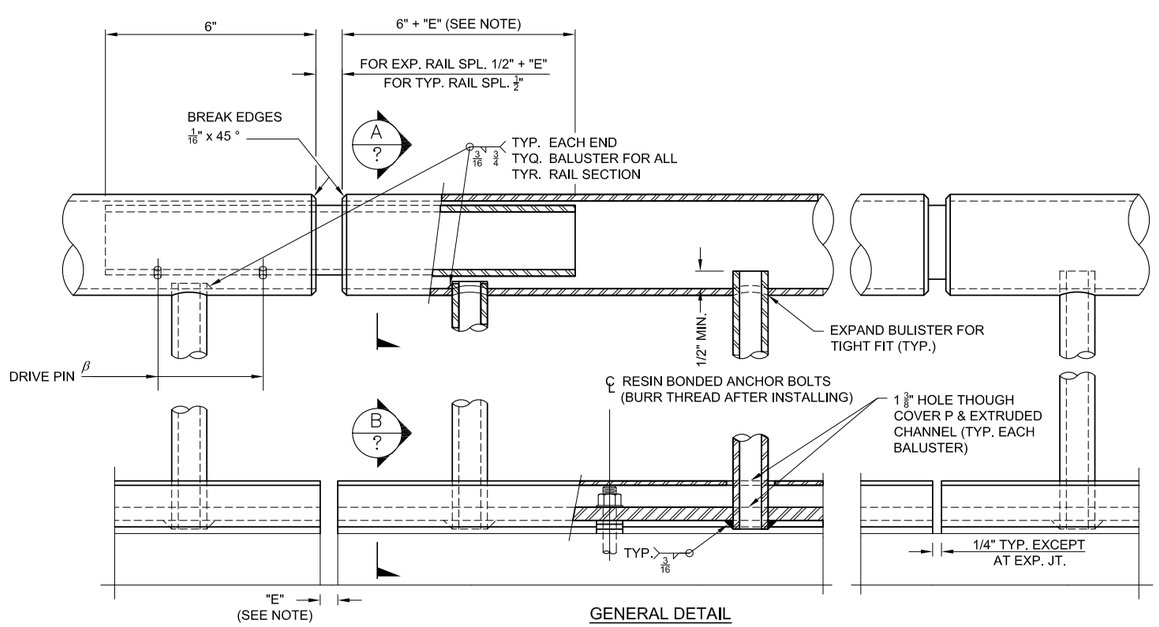

GENERAL DETAIL

1. PIPE RAILING, PIPE RAILING SPLICES, COVER PLATES AND BOTTOM EXTRUDED CHANNELS SHALL BE BENT TO THE HORIZONTAL CURVE WHERE THE RADIUS OF CURVATURE IS LESS THAN 200'. THESE ITEMS MAY BE HEATED TO NOT MORE THAN 400°F FOR A PERIOD NOT TO EXCEED 30 MINUTES TO FACILITATE FORMING OR BENDING TO HORIZONTAL CURVATURE.
2. SHOP DRAWINGS OF RAILING SHALL BE SUBMITTED FOR APPROVAL SHOWING COMPLETE DIMENSIONS AND DETAILS OF FABRICATION AND INCLUDING AN ERECTION DIAGRAM. MATERIAL SPECIFICATIONS SHALL BE PROVIDED IN THE SHOP DRAWINGS FOR ALL COMPONENTS.
3. CUTTING SHALL BE DONE BY SAWING OR MILLING AND ALL CUTS SHALL BE TRUE AND SMOOTH. FLAME CUTTING WILL NOT BE PERMITTED.
4. WELDING OF ALUMINUM SHALL CONFORM TO STD. SPEC. SECTION 9-28.14(3).
5. ALL ALUMINUM PARTS SHALL BE GIVEN A *[CLEAR OR BRONZE] ANODIC COATING OF AT LEAST 0.0006" THICK AND SEALED TO MEET THE REQUIREMENTS OF ASTM B 580 WITH A UNIFORM FINISH.
6. PIPE RAILING, PIPE BALUSTERS AND PIPE RAILING SPLICES SHALL BE ADEQUATELY WRAPPED TO INSURE SURFACE PROTECTION DURING HANDLING AND TRANSPORTATION TO THE JOB SITE.

α PROVIDE EXPANSION RAIL SPLICE AT TRAFFIC BARRIER EXPANSION JOINTS. RAIL SPLICE JOINTS ARE NOT REQUIRED AT TRAFFIC BARRIER DUMMY JOINTS.

β LOCATE ON OPPOSITE SIDE OF TRAFFIC. DRIVE PINS SHALL BE DRIVEN FLUSH WITH THE OUTSIDE FACE OF THE RAILING.

NOTE:
"E" DIMENSION SHALL BE EQUAL TO OPENING OF TRAFFIC BARRIER EXPANSION JOINTS.

60% SUBMITTAL

King County
Department of Natural Resources and Parks
Parks and Recreation Division
King Street Center, KSC-NR-0700
201 So. Jackson Street, Suite 700
Seattle, Washington 98104
Telephone: (206) 477-4527
Fax: (206) 263-6217

exeltech
8729 Commerce Pl. Dr. NE
Lacey, WA 98516
(360) 357-8289
www.xltech.com

SAEED JAVIDI NIROOMAND
STATE OF WASHINGTON
53098
REGISTERED PROFESSIONAL ENGINEER

FOOTHILLS TRAIL
TRAIL IMPROVEMENTS - PHASE II
KING COUNTY DEPT. OF NATURAL RESOURCES & PARKS

ISSUE / REVISIONS

ID	DATE	DESCRIPTION
1	6/2/16	30% SUBMITTAL
2	7/27/16	60% SUBMITTAL

PROJECT NO. 1527
SITE NO.
FILE
CONTRACT NO. E00115E08 - AM. 8
DRAWN BY BIP CHECKED BY SJN
SHEET TITLE
BRIDGE RAILING
TYPE BP
SHEET 1 OF 2

S-110

X OF X

P:\2015\1527 hult: zcallars boise creek arch bridge\02-CADD\Sheets\amendment 8\ 1527 - Boise Creek Arch Bridge - S110 Bridge Railing - Amendment 8.dwg Thursday, September 08, 2016 8:54am

SEC. 26, 34 & 35, T 20 N, R 6 E, W.M.

DRIVE PIN DETAIL

SLOTTED TYPE SPRING PIN (ANSI B18.8.2)

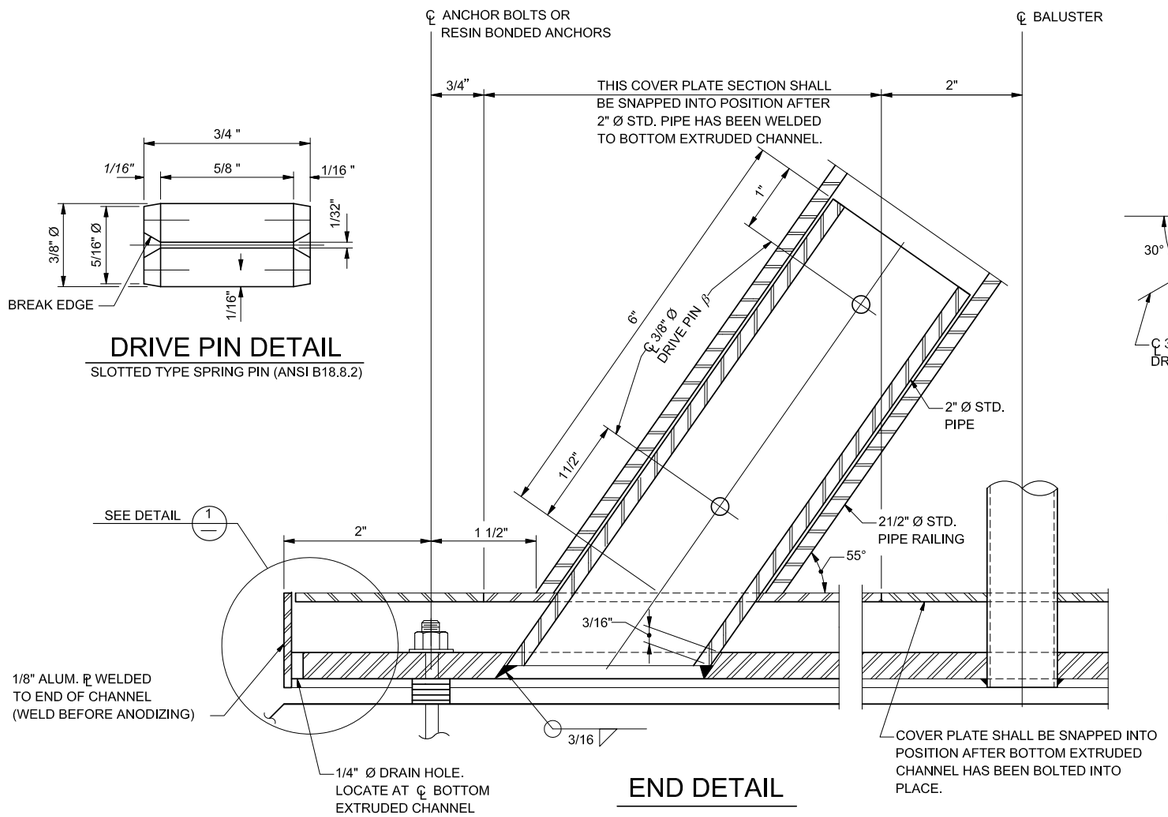

END DETAIL

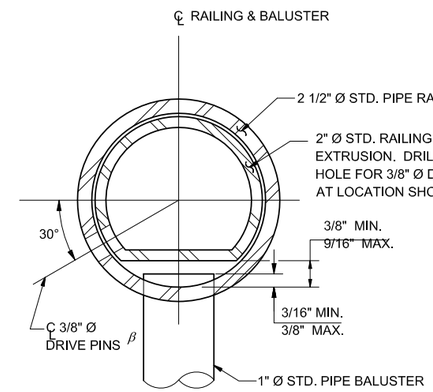

SECTION A ?

OPTION #1

ß LOCATE ON OPPOSITE SIDE OF TRAFFIC. DRIVE PINS SHALL BE DRIVEN FLUSH WITH THE OUTSIDE FACE OF THE RAILING.

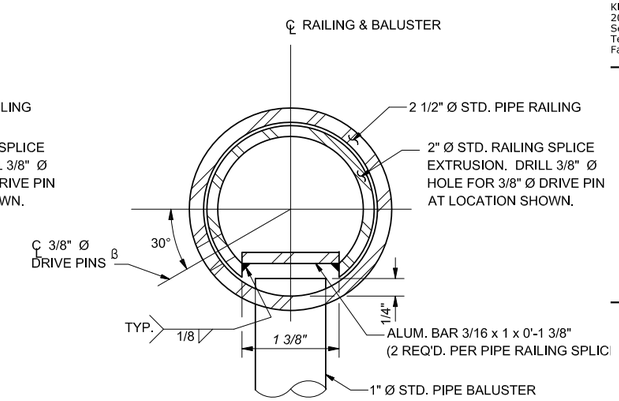

SECTION A ?

OPTION #2

ß LOCATE ON OPPOSITE SIDE OF TRAFFIC. DRIVE PINS SHALL BE DRIVEN FLUSH WITH THE OUTSIDE FACE OF THE RAILING.

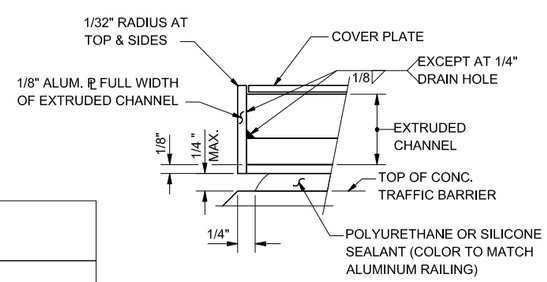

DETAIL 1 —

DRAIN HOLES NOT SHOWN

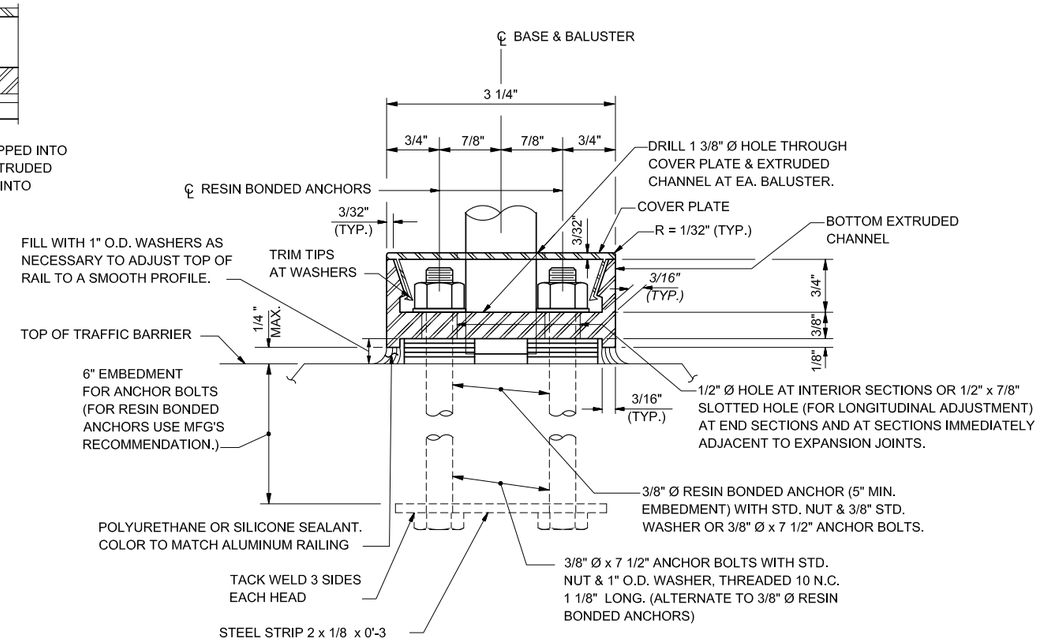

SECTION B ?

ANCHOR BOLTS SHALL BE POSITIONED IN A JIG DURING WELDING.

MAT'L	PART	MATERIAL SPECIFICATION
ALUMINUM	PIPES	ASTM B 221- 6005-T5 OR 6005A-T5 ASTM B 241 OR B 429 6061-T6
ALUMINUM	EXTRUDED CHANNELS, COVER PLATES & BAR	ASTM B 221- 6005-T5
STEEL	ANCHOR BOLTS, NUTS & WASHERS	STANDARD SPECIFICATION SECTION 9-06.5(4) (GALVANIZE IN ACCORDANCE WITH AASHTO SPECIFICATION M 232)
STEEL	STRIP	ASTM A 36
STEEL	DRIVE PINS	ASTM A 276 TYPE 302 STAINLESS STEEL

60% SUBMITTAL

King County
Department of Natural Resources and Parks
Parks and Recreation Division
King Street Center, KSC-NR-0700
201 So. Jackson Street, Suite 700
Seattle, Washington 98104
Telephone: (206) 477-4527
Fax: (206) 263-6217

exeltech
8729 Commerce Pl. Dr. NE
Lacey, WA 98516
(360) 357-8289
www.xtech.com

SAEED JAVIDI NIROMAND
STATE OF WASHINGTON
53098
REGISTERED PROFESSIONAL ENGINEER

FOOTHILLS TRAIL

TRAIL IMPROVEMENTS - PHASE II

KING COUNTY DEPT. OF NATURAL RESOURCES & PARKS

ISSUE / REVISIONS		
ID	DATE	DESCRIPTION
1	6/2/16	30% SUBMITTAL
2	7/27/16	60% SUBMITTAL

PROJECT NO. 1527
SITE NO.
FILE
CONTRACT NO. E00115E08 - AM. 8
DRAWN BY BIP CHECKED BY SJN
SHEET TITLE
BRIDGE RAILING
TYPE BP
SHEET 2 OF 2

S-111

X OF X

P:\2015\1527 hulit zollars boise creek arch bridge\02-CADD\Sheets\amendment 8\ 1527 - Boise Creek Arch Bridge - S111 Bridge Railing - Amendment 8.dwg Thursday, September 08, 2016 8:57am