King County Metro

Access RideGuide

Revised June, 2020

You can also read the RideGuide online at
kingcounty.gov/AccessRideGuide

Interpreter 206-263-3113
Intérpretes Turjubaan Переводчик
Перекладач 통역사 የቃል አስተርጓሚ
翻譯員 Thông Dịch Viên ઇંટરપરેટર

King County
METRO
Moving forward together

Dear Access Customer:

King County, and our partner Sound Transit, are committed to providing all customers with accessible, convenient and reliable service across all lines of service. Whether you are riding Access, fixed-route buses, rail, water taxis, vanpool, carpool or any one of our various innovative mobility services, we want to make sure you have a positive experience. King County Metro provides more than 11 million rides annually, to seniors and people with disabilities.

Our Access service meets and exceeds the guidelines of the Americans with Disabilities Act (ADA). Also, Metro works closely with our Access Paratransit Advisory Committee (APAC) to seek ways to further improve our programs.

We know there are always opportunities for improvement, so we're actively listening to your comments and working to find new ways to enhance our services. Here are a few of the improvements we've made in the last year and others we are exploring for 2020:

- raising our on-time performance goal to 92% of all trips;
- narrowing the time you can be dropped off for appointments;
- bringing complaints and comments in-house;
- exploring same-day demand service;
- developing an online option to reserve and pay for trips;
- and creating an app for real-time trip monitoring.

We are most successful in providing high-quality services when King County Metro and its customers work together. You can help us conserve resources, reduce costs, and prevent delays for all riders when you do the following:

- Choose the bus, light rail, water taxi or train for a trip whenever possible.
- Provide a valid fare each time you board.
- Be ready to board the Access vehicle at the start of the pick-up window.
- Cancel unneeded Access rides in advance.
- Contact Metro Customer Service (206) 205-5000 (press 4 and then 2) when you have a complaint, comment, or compliment regarding Access service.
- Learn more at KingCounty.gov/Metro/Access

Every customer counts, and you can help us provide you and your fellow riders with the best service possible. We look forward to serving you.

Moving forward together,

Rob Gannon
General Manager, King County Metro

Table of Contents

Quick Start 4
Applying for Access 12
- Conditional & Unconditional eligibility 13
- Eligibility appeal, duration & expiration 14
- Visitors 15

Planning your Travel 18
- Service area & hours 18
- Level of service 20
- Driver assistance 21
- Personal Care Attendants (PCAs) & Companions 22
- Mobility devices 24
- Service animals & pets 25
- Packages & luggage 26
- Reserve & Cancel trips 29
- Appointment or Pick-up time 30

Booking a trip 32
- 30-minute pick-up window 33
- Changing & canceling trips 34
- Standing ride service 35
- Pick-up location 37
- Estimated Time of Arrival (ETA) 38

The Day of your Trip 40
- When the van is late 43
- Adjusting return trip time 44

When something goes wrong 46
- Late cancellation 46
- Code of Conduct & penalties 48
- Fare policy & penalties 51

Comments & Concerns 56

Quick Start

1. Schedule a ride one to seven days in advance.
2. Call 206-205-5000, seven days a week during normal business hours. Have the exact address for your pick-up and drop-off.
3. Be ready to board Access at any time within the 30-minute pick-up window.
4. Pay for your ride with cash or a pass after boarding Access.
5. You will share your ride with other passengers.
6. Expect stops and detours along the way before you reach your destination.
7. Cancel rides as soon as you know that you will not be taking them. You must call to cancel at least two hours before your pick-up window begins.

How often is the Guide updated?
The Access RideGuide is printed once a year. For changes that happen during the year, go to **kingcounty.gov/AccessRideGuide** to see the online version of this guide or call Accessible Services at 206-263-3113 WA State Relay: 711.

Riding Tips

- Be prepared for the weather. Carry a raincoat or poncho on rainy days.
- Have important medical information with you.
- Wear sturdy shoes with non-slip soles.
- Check cane tips to make sure metal is not showing.
- Make sure wheelchair and walker brakes are in good working order.
- Wear white or bright colored clothing and use reflectors, safety flags and or bicycle lights on your wheelchair or walker.
- Carry a card with your name, address, phone number and emergency contact information and instructions.
- Keep backpacks and bags lightweight and zipped. On wheelchairs consider using a side pouch or small bag under the seat for easy access.
- Tell the driver when you need help.
- If you have cell phone, save numbers and download the apps.

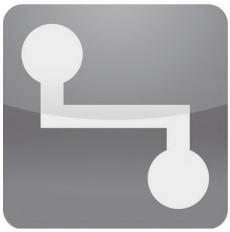

Welcome to your RideGuide!

Who is this guide for?

This guide is for Access customers and the family, friends, and caregivers of Access customers. We hope you find it helpful and easy to use.

What is in this guide?

In this guide, we will tell you:

- How Access service works and what you can expect when you ride Access.
- How to find out whether you are eligible to ride Access.
- How to reserve and cancel rides on Access.
- How to ride Access on the day of your trip.
- What to do when you have a problem with Access.

This guide covers the basics of Access, but it does not describe every detail of the program. If you would like more information, visit our website **www.kingcounty.gov/Access** or call Rider Services at 206-205-5000.

Can I read this guide in other languages or an accessible format?

Yes. This guide is available in large print, Braille, audiotape, computer disc (CD), or downloadable PDF formats. To request an accessible format, please call 206-263-3113, WA State Relay: 711.

This information is also available in Spanish, online at **kingcounty.gov/AccessRideGuide.** For other languages please call the interpreter at 206-263-3113, WA State Relay: 711 to help you understand this guide.

Introduction to Access Transportation

Metro Access provides origin-to-destination paratransit service in King County for people who cannot get to, or ride the regular Metro bus or light rail, some or all of the time, due to a disability.

Why was Access Transportation created?

Riding the bus or rail isn't always possible when you have a disability. Even the best bus and rail service will have barriers some of the time. The Americans with Disabilities Act (ADA) requires that transit agencies like Metro and Sound Transit make their bus and rail services user-friendly for people with disabilities. The ADA also requires us to provide a paratransit service for customers who can't take the bus or rail because of their disability. In King County, ADA paratransit services are provided by Metro's Access Transportation Services (Access for short).

How is Access different than the bus and light rail?

Access can help you travel to anywhere in King County that also has bus or light rail service, but it works very differently. This section explains some of the differences, so you know what to expect when you ride with us.

Type of Service

- Bus and light rail are fixed-route transit, which means that the bus or train travels along the same route to the same stops at scheduled times every day. Buses and light rail can move a lot of people on a few vehicles quickly and cheaply. Some customers have difficulty using these services or making their way to and from the bus or rail stop.

- Access paratransit is demand-responsive transit, which means that the van goes where each customer wants to go and when they want to go there. Customers reserve a trip ahead of time and tell us the pick-up and drop-off locations. Every day, we put everyone's trip requests together to create a new schedule for each van. Your ride is shared so the route is rarely direct. Some customers need point-to-point service, but it is more expensive to run than fixed-route buses.

Who Can Ride?

- Bus and light rail allow anyone who pays the fare to ride. Many customers will share the same bus or train vehicle at the same time on their way to different destinations.
- Access paratransit requires you to complete a certification process before you start reserving trips. You can use Access for a trip if you are unable to ride a bus or light rail for that trip. A customer who is qualified and approved for a Personal Care Attendant (PCA), can bring a PCA at no additional charge. Any Access rider can also bring one fare-paying companion when they make a ride request.

Reserving and Canceling Trips

- Bus and light rail do not use reservations. You simply meet the bus or train when it is scheduled to arrive at a nearby stop. If you miss it, you can catch the next one.
- Access paratransit requires you to make a reservation one to seven days before you want to travel. You must cancel any trips you do not plan to take. If you miss your pick-up, it may take a long time for us to send another ride for you.

Vehicles and Drivers

- Bus and light rail use large vehicles that hold a lot of people at the same time. All Metro and Sound Transit buses and trains are wheelchair accessible. You cannot ask to ride in or avoid a specific vehicle.
- Access paratransit uses paratransit vans that hold fewer customers than a bus but have lots of space for wheelchairs and other mobility devices. We may send a taxi instead of a van for some trips. You cannot ask to ride with, or avoid a specific driver. You cannot ask to ride in, or avoid a specific vehicle.

Pick-up, Drop-off, and Boarding

- Bus and light rail pick up and drop off at marked stops, at a scheduled times. The bus driver can deploy a ramp for you and help secure you onboard.
- Access paratransit picks you up and drops you off at the addresses you provide. The driver will pull up to a safe and legal space close to where you are waiting and help you get on and off the van.

Trip Routing and Transfers

- Bus and light rail follow a direct route from stop to stop. For some trips you may need to transfer from one route to another.
- Access paratransit may take a different route and make different stops on the way to your destination each time you ride. You may need to transfer from one vehicle to another when going long distances or across county lines.

Trip Duration and Delays

- Bus and light rail routes arrive and leave each stop on a schedule. You can look up a timetable for each route. Traffic, weather, or operations problems sometimes cause delays.
- Access paratransit also has a schedule but it changes every day. Sometimes traveling by Access takes a little more time than bus or light rail, and sometimes it takes less time. Traffic, weather, or operations problems sometimes cause delays.

Fares, Passes, and Discounts

- Bus fares are $2.75 with cash or ORCA card. Light rail fares vary depending on how far you travel. Monthly bus passes are available, and some people may qualify for a reduced fare permit making their bus fares $1.
- Access paratransit fares are reduced to $1.75 or $63 for a monthly pass. We cannot use money loaded on an ORCA e-purse because there are no ORCA readers on Access vans.

Operation Cost and Farebox Recovery

- Bus service is designed to move a lot of people for low cost. An average bus trip costs Metro $4. Customer fares cover about 25% of this cost, while taxpayers cover the rest.
- Access paratransit provides extra services and travels a longer distance to each customer's origin and destination. Each van can serve fewer customers per hour than a bus can, so Access is more expensive to run. An average Access trip costs Metro $65. Customer fares cover about 2% of this cost, while taxpayers cover the rest.

If you can take your trip on the bus and light rail, Metro wants to support you doing that. Not only does it save taxpayers' dollars; it can also save you money. It also puts you in control of your transportation. But if you can't take the trip on the bus or rail, Access is there.

What you can expect from us

- We will protect your safety
- We will guard your privacy
- We will treat you with respect
- We will keep you informed
- We will listen
- We will provide quality transportation services that are equivalent to those offered on Metro fixed route bus
- Travel in a clean, well-maintained vehicle

What we expect from you

- To show courtesy to each other and staff
- To tell us when your ride doesn't go right
- To let us know when we do better than expected
- To follow Metro's Code of Conduct
- Keep information up-to-date

Applying for Access Service

This section tells you more about how to apply for Access and how you may qualify based on the Americans with Disabilities Act (ADA) eligibility standards.

Am I eligible to ride Access?

You are eligible for Access only if you have a physical and/or mental disability that prevents you from independently using the regular fixed route or light rail system for some or all of your trips.

How do I apply?

Follow these steps to apply to be an Access rider:

1. Request more information and an application form by calling Access Rider Services at 206-205-5000 (WA Relay: 711) or visiting our online self-assessment: www.kingcounty.gov/ApplyforAccess. We ask you to complete a self-assessment form before we send you an application. The self-assessment will help you determine if Access will meet your transportation needs.
2. When you complete the application form, **have your health care professional sign and complete the last page.** Send the completed application to King County Metro Accessible Services, 201 S. Jackson Street, KSC-TR-0800, Seattle, WA 98104. Or you can drop off your application at King County Metro's Customer Service Office located at 201 S. Jackson Street in Seattle. You can also fax your application to 206-205-6490.

3. We will contact you by phone to schedule a free, in-person functional evaluation at Harborview Medical Center's Department of Rehabilitation Medicine. The evaluation helps us understand how to best meet your mobility needs and whether your disability prevents you from using the bus or light rail. We can provide a free Access ride to and from Harborview if you need it. You are also welcome to bring an adult attendant to accompany you while traveling to/from your evaluation.
4. King County Metro Accessible Services will mail you a letter to tell you if you are eligible to ride Access within 21 calendar days after we receive all your information.

Can I use Access as my primary transportation?

It depends on your paratransit certification. When you received your certification letter from King County Metro's Accessible Services it indicated if you were unconditionally or conditionally eligible.

Unconditional eligibility means there are barriers to you riding the bus or light rail by yourself because of the limits your disability places on you. Any time you need to take transit, book your trip on Access.

Conditionally eligible means there are barriers to you riding the bus or light rail but they might not always be present. These barriers are listed in your certification letter. Enjoy the convenience of the bus and light rail when those barriers are not there. Call Access and book a trip when there are barriers. If you are not sure, call the Access Rideline at 206-205-5000 and the Reservationist will help you. What about when you can ride the bus or light rail

but you can't get to the bus stop or train station because of a barrier? Access can take you to the bus stop or train station to board and complete your trip.

It may also be determined that you are able to take the regular public bus or light rail service for all of your trips. You would not be eligible for ADA paratransit; (therefore, Access Transportation would not be available.)

I disagree with my eligibility decision. What do I do?

You have the right to appeal a denial of eligibility or a condition of your eligibility to ride Access. You can ask for the appeal by sending a letter to King County Metro Accessible Services, 201 S. Jackson Street, KSC-TR-0800 Seattle, WA 98104 within 60 days after we send your certification letter. You can also email accessible.services@kingcounty.gov or contact the Access Certification office at 206-263-3113. You may ask to be heard in person, in writing, or over the phone. After the hearing, the appeal officer will send you a letter with their final decision.

How long am I eligible for Access?

Once we have decided you are eligible and you have received your certification letter, this decision is valid for up to three years. You may receive a shorter eligibility term based upon your individual situation. Access will notify you 60 days before eligibility expires to offer recertification.

I am visiting from outside King County. Can I use Access?

If you are ADA Paratransit certified by the City of Everett, Intercity Transit, Island County, Jefferson Transit, Kitsap Transit, Pierce Transit, Skagit Transit, or Snohomish County's Community Transit, you can use Access as many days as you need as a Regional Rider.

Have your home paratransit agency send us your eligibility information and you can book rides to/from King County directly with them. After we receive your information we will call to let you know that you can begin calling Reservations to book rides.

Persons with disabilities visiting King County from outside the Puget Sound area

To qualify as a visitor under the Americans with Disabilities Act (ADA) Paratransit service, a person must have a disability that prevents them from using a lift or ramp-equipped public bus either some or all of the time.

Visitors residing outside of King County, Washington who are certified ADA eligible by another transit provider, or provide necessary documentation of a disability, or self-certify that they have a disability that prevents them from using the scheduled fixed-route lift and ramp-equipped public buses, may use the ADA complementary paratransit service (Access Transportation) for any combination of 21 days within a 365-day period. A visitor who needs Access Transportation service for more than 21 days within a 365-day period must certify for regular eligibility with King

County Metro Access Transportation.

If the visitor is paratransit eligible with their local transit agency, request that documentation be faxed to our Access Certification office at 206-205-6490. If the visitor is not paratransit eligible with another transit agency, contact our Access Certification office at 206-263-3113 and a Customer Services Coordinator will assist with providing the necessary forms which will need to be completed by the visitor. We encourage visitors to contact the Access Certification office one month before their visit to allow time for obtaining, submitting and processing visitor documentation.

Can Access help me learn how to use fixed-route bus?

Yes, you can find information at:
kingcounty.gov/metro/instruction

Planning Your Travel

This section tells you more about where and when you can travel on Access, how the driver can help you when you get on and off the vehicle, who and what you can bring with you, and how much it will cost.

Where and when can I go on Access?

Access can pick you up and drop you off almost anywhere a Metro bus or light rail train goes at that time and on that day of the week. Access customers go grocery shopping, to work and school, to get their hair cut or check in with their doctor, meet up with friends, or to enjoy a local park. You can go anyplace – as long as the bus or rail go there.

Access serves areas within a ¾-mile radius around a fixed-route Metro bus line or a Link or Sounder train station at the same times that fixed-route service is also running. Our service area changes hourly to match the fixed route bus system. During the peak hours our service area is very large. Late into the evenings and weekends the service area is much smaller.

On the following page, is an example contrasting our largest weekday service area versus our overnight service area.

In some areas, Access extends this service area further than what the ADA requires. The eastern edge of our service area extends an extra ¾ mile into eastern King County. We also cover some pockets of rural King County not served by buses. Trips beyond the ADA-required service area may not have the same federal protection as ADA trips. Our local community funds these additional services. They may be cut if there is no funding available.

If you are not sure what service is available in your area, call Accessible Services at 206-263-3113 and we can tell you.

Access Service Area 9 AM - 6 PM

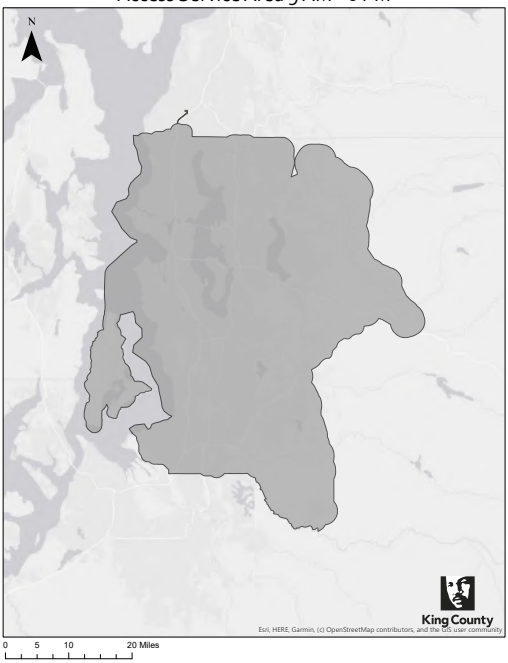

Access Service Area 4 AM - 5 AM

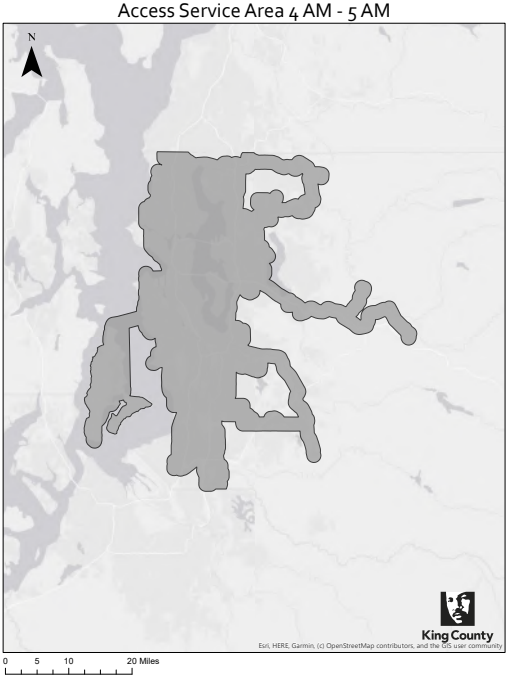

TIP Do you live outside the area served by Metro or Link light rail? You can arrange to be picked up at another location where there is transit service.

TIP Are you considering a move within King County? Call Access Rider Services at 206-205-5000 before you make that decision. They can tell you about the public transit service in the neighborhood you are considering.

What level of service will Access provide at pick-up and drop-off?

Access is an origin to destination service. During the eligibility process you will be assigned a "service level" based on your needs and abilities. There are three service levels: curb-to-curb, door-to-door, and hand-to-hand.

We provide reasonable modification of policy and practice to ensure that our transportation services are accessible to people with disabilities. Call Accessible Services if you think you need a change in service level.

For all service levels, the driver will park the vehicle in a safe location that does not block traffic. In busy areas with limited parking, the driver may not be able to park right in front of your destination. The driver must always be able to see the vehicle, so the driver cannot go indoors or around the corner to find you or to assist you to your door.

- Curb-to-Curb: At pick-up, you will come out to meet the vehicle where it is parked. The driver will assist you into the vehicle and guide you to your seat. At drop-off, the driver will help you out of the vehicle and to the curb before leaving.
- Door-to-Door: Help past the curb. At pick-up, the driver meets you outside your main entrance, walks with you to the van and helps you on board. If you live in an apartment building, the driver will come to the main entrance and announce the van's arrival. Drivers cannot go inside the building. At drop-off, your driver will also help you off the van, offer a steadying hand, and walk with you to the door of your destination. If you need more help after you have entered the building, arrange to have someone to meet you. Door-to-door service

is only available when the driver can safely park close enough to see the van from the building entrance.

- Hand-to-Hand: You are never left alone. Your caregiver is with you at the door when the Access driver picks you up. When you get to where you are going, the driver will hand you off to the person there to meet you.

How can the Access driver assist me?

Access drivers can help you with:

- Getting in and out of the vehicle. The driver will guide you into and out of your seat and provide a steadying hand for you. If you are uncomfortable using the vehicle steps, you may ask to stand on the lift platform to get on and off.
- Fastening seat belts and securing wheelchairs, scooters and large walkers.
- Assisting you with manual devices if requested. The driver can push and guide you to/from the vehicle, on/off the lift platform of the vehicle, and inside the vehicle. The driver cannot push you up steep slopes.
- Helping you carry up to four bags or packages, each weighing 10 pounds or less.
- Securing packages or luggage that you cannot carry on your lap.
- Giving first aid or CPR in an emergency.

There are some things drivers cannot do for you:

- Helping you get in and out of a wheelchair.
- Helping you navigate steps or curbs without ramps in a wheelchair.
- Helping you up or down steep slopes (more than 8% grade).
- Putting on or removing jackets, hats, or other clothes.
- Controlling your powered mobility device.
- Providing you physical support (versus a steadying hand) to walk between the vehicle and the outermost exterior door of the pick-up or destination.
- Providing other medical or personal care services such as changing oxygen canisters.
- Locating or handling your keys to unlock the door.
- Driving on a different route than provided on the driver's schedule, even if it might be faster.
- Parking in a location that is unsafe or blocks traffic.
- Looking for you, assisting you, or providing door-to-door service if the driver cannot see the vehicle.

Who can I bring with me?

Some customers may need to travel with, or be met by, a Personal Care Attendant (PCA) in order to ride Access. A PCA can perform duties for you that the Access driver cannot. A PCA is someone who helps you on a regular basis with one or more daily life functions, such as eating, dressing or personal hygiene. If you are approved to bring a PCA after completing your Access certification process, your PCA may ride with you for free.

If you use a PCA and are not currently certified to bring a PCA on Access, call Accessible Services at 206-263-3113 and we will mail you the necessary paperwork, which may include a recertification. It is your responsibility to find a PCA for your trip. Accessible Services does not provide a PCA.

Companion: A companion is anyone else who is traveling with you. All customers may travel with one companion. Additional companions may be allowed on a space available basis. You can tell the Access Reservationist if you need space for a companion when you make your reservation. You must also tell Access what mobility devices or items they will bring.

Companion fares are equal to your Access fare. Children five years and younger ride free. The customer is responsible for paying the companion fare.

If your companion is a baby or child under four years of age, you must bring your own infant or child seat. Vans do not have child seats on board. You must request space for the child seat when you reserve your trip. We will not transport any infant or child under four years of age who is not in a properly secured approved child seat.

We can only approve child seats that can be safely secured in the vehicle. Child safety seats that need a seat belt with a shoulder strap will not be transported because Access vehicles do not have shoulder straps for passenger seats. Children over four years of age should sit in regular passenger seat and use the seat belt unless a child seat is provided that only needs a lap belt.

What mobility devices can I use on Access?

We take an inventory of the mobility devices you use when you register for Access. Let the Reservationist know when you book your trip which mobility device you plan to bring.

If you have a new mobility device, call Accessible Services at 206-263-3113 before taking it on Access. We weigh and measure wheelchairs, scooters and motorized wheelchairs to make sure they fit within the Access vans' maximum size and weight. We may also measure how much space and time you need to board and de-board the van with your new mobility device, so that we can use that information when we schedule your rides.

You and your wheelchair or scooter must weigh less than 800 pounds, combined. To fit on the lift, the chair must be less than 32" wide and 52" long- at the platform level. Some longer lengths can be accommodated if the length is above the roll stop of the lift.

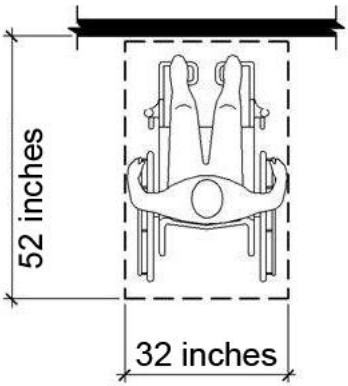

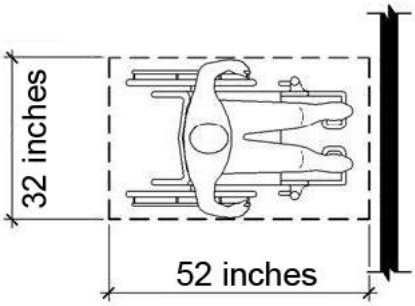

Please make sure your mobility device is in good working order. If the brakes are not tight enough to keep the device from rolling independently, they may pose a safety hazard. The driver will help secure your device for the ride.

In some cases, a mobility device may not have proper securement points. Access drivers may use a set of "Qstraint" loops to ensure proper securement of your mobility device.

You may order your own straps at Qstraint.com

Operators are responsible for making sure that your straps are properly fastened to your mobility device. If the operator feels that they are not, they will ask for your permission to relocate them to a safer location.

Can I bring a service animal or a pet?

Yes. You will not be charged a fare for a service animal. A pet must be in a pet carrier or on the floor. If you bring a pet and the pet carrier is on your lap, there will be no fare charged for your pet. However, if your pet carrier takes up a seat you will be charged fare equal to the customer. You must keep control of your animal during the ride.

What else can I bring with me?

When you book your ride, tell the Reservationist what items you want to bring. They will check to see if these items are allowed on the van. In most cases, bringing a package that can be held on your lap is fine. You can also bring a folding or non-folding personal shopping cart.

Items that cannot be safely secured in the vehicle are a safety risk and are not allowed.

Examples of items we do not transport:

- Any item weighing more than 40 pounds
- More than two pieces of luggage per customer
- Flammables
- Uncovered glass or sharp objects

On the day of your trip the driver can help you carry four bags or packages, each weighing 10 pounds or less. If your luggage has wheels, additional weight is allowed at the driver's discretion. Packages that you can't carry on your lap, will be secured by the driver.

How will I be secured during the ride?

The Access Securement Policy requires you to be secured during your ride unless you have an approved waiver.

- If you can sit in a van seat, you will wear a seat belt across your lap. Access vans do not have shoulder seat belts. The driver will ensure you are secured.
- If you use a wheelchair or scooter, you will be secured with both a lap seat belt and a shoulder belt.

Our securements are designed in compliance with Metro policy and applicable state laws. The belts are designed to protect you and others, and to prevent injury.

We will not transport you if you are not secured and do not have an approved waiver. Drivers are not permitted to move the vehicle until all passengers are secured, and must stop the vehicle if they become aware that belts are removed during travel.

What if I need a waiver from the Access Securement Policy?

If you have certain medical conditions, state laws allow you to ask for a waiver that allows you not to wear a lap belt or shoulder belts on Access. Your healthcare provider must sign a document that tells us the medical reason why you should not wear a lap belt or shoulder belt. Access will inform you and your healthcare provider about the safety risks to you, other passengers and Access drivers.

If you want to apply for a waiver, contact Rider Services Access.RiderServices@kingcounty.gov or 206-205-5000 to ask for a waiver form. If we approve your application, we will note that you have a waiver in the driver's instructions. If we do not approve your waiver, you must continue wearing the lap and shoulder belts.

Even if you have a waiver for a lap or shoulder belt, we must always tie down mobility devices.

How much does it cost to ride Access and how do I pay for it?

The fare for Access is $1.75. You can pay your fare in the following ways:

- In cash: You can pay $1.75 in cash. The driver does not carry change. The driver cannot accept tips.
- ORCA pass: Access Passes are loaded on an ORCA card. You can purchase a pass online at www.orcacard.com, by mail, fax, phone or in person. Call the ORCA line at 1-888-988-6722 to get more information on how and where to buy a pass. The Metro Customer Service Representative will help you determine the pass that is best for you. **Access vans and taxis do not have ORCA readers and cannot use your ORCA e-purse.**
- Metro tickets.
- Mobile ticketing with your smartphone.
- Or a combination of the above.

We are developing an off-board payment system. Visit **www.kingcounty.gov/Access** for the latest developments.

King County Metro offers various reduced fares when riding the bus or light rail, and keeps Access fares low. To find resources that offer financial help to pay for transportation, call the 2-1-1 King County Information Line.

If you do not pay the exact fare when asked, you can still take your trip without paying, but we will record your fare nonpayment. If you demonstrate a pattern and practice of not paying your fare, you may be suspended from Access.

What should I do if my information has changed?

Call Rider Services 206-205-5000 if there is a change in:

- Address or telephone number
- Emergency contact's name or telephone number
- Disability or health condition as related to your need for Access
- Need for a Personal Care Attendant
- Mobility device and/or your use of a device

Reserving and Canceling Trips

This section tells you how to decide when to travel, how to reserve a trip, and how to cancel a trip.

How and when can I reserve a trip?

To reserve a trip, call the Access Rideline at 206-205-5000 and speak with a Reservationist (press #2). Reservationists take calls from 8 AM to 5 PM, seven days a week.

You can reserve a trip one to seven days before you plan to travel, but you cannot book a trip for the same day.

TIP The call center is busiest from 2 PM to 5 PM, so call for reservations earlier in the day to avoid waiting on hold.

Someone else can call us and reserve a trip for you. They must have your name, home address and Access ID number and the Reservationist may ask their relationship to you. If you do not want someone making reservations or checking on your rides, contact Rider Services and we can secure your account with a password of your choice.

We are actively pursuing the ability to book your trips online. Please check www.kingcounty.gov/Access for the latest updates on this project.

How do I decide what time to ask for?

You can ask for a specific drop-off time or a specific pick-up time, but not both. So for each trip you take, first decide what is more important:

- Do you need to be dropped off at a certain time, or
- Do you want to get picked up at a certain time?

If you need to be dropped off somewhere at a certain time, ask the Reservationist to schedule your trip by appointment time. The Reservationist will find the best available pick-up time for you to arrive before your appointment. Our goal is to get you to your appointment no more than a half hour before your due time.

If you want to get picked up at a certain time, ask the Reservationist to schedule your trip by pick-up time. The Reservationist will look for the first available pick-up within an hour before or after your request. If you request a specific pick-up time, we cannot give you an appointment time.

You can negotiate your pick-up time or your appointment time, but you cannot negotiate both.

TIP Allow enough extra time to get to your appointment after Access drops you off.

TIP Find out about building opening and closing times at your destination and plan your trip so that you won't have to wait outside.

TIP The demand for weekday Access service peaks from 7 AM to 9 AM and 2 PM to 5 PM. You will generally have the best selection of pick-up or drop-off times if you can travel outside these "peak" hours.

What do I need to know to book a trip?

The Reservationist will ask you several questions. For your security the Reservationist will always ask for two pieces of information to confirm your identity. These may include your ID number, a password, phone number, or your home address.

The Reservationist may read back information you have already given us to make sure it has not changed.
To complete your reservation, we will need to know:

- Your home address and phone number.
- The date of your trip.
- The exact street address where Access will pick you up.
- The exact street address of where you are going.
- The time you want to be picked up or dropped off.
- What mobility device you will be using and if you will be bringing an oxygen tank.
- If you will be bringing someone, and if they will bring a mobility device, oxygen tank, or child seat.
- If an animal will be riding with you. A pet must ride in a carrier or on the floor but a service animal does not.
- If you will be bringing anything else with you on the van such as packages or a personal grocery cart.
- The time you would like to be picked up for your return trip or to go to your next destination. Your pick-up time for your return trip or next trip leg must be at least 30 minutes after the drop-off time for your first trip.

TIP Meeting up with someone? Give the Reservationist the phone number of the person you are meeting and give your friend the Access Rideline number.

What information will the Reservationist give me?

The reservationist will check to see if this is a trip that you can take on Access. They will tell you one of three things:

- If there is no Metro bus service or Sound Transit Link light rail service at that time or day, the Reservationist will tell you that no trip can be booked on Access, or
- If you are conditionally eligible to ride Access and there are no barriers, the Reservationist will tell you to take the bus or train for this trip, or
- If you are eligible to take this trip on Access, the Reservationist will confirm your reservation, tell you the time of your pick-up window and where Access will pick you up and drop you off.

If the trip can be taken on Access, the Reservationist will find the route that your trip will be on and give you a 30-minute pick-up window. You need to be ready to board Access any time during this window. For example, if you are given a window from 11:30 AM to 12 PM, Access could come as early as 11:30 AM and any time after that–up to 12 PM.

You will be given a specific location where Access will meet you to pick you up and to drop you off.

TIP Repeat the information back to the Reservationist and write it down if you can.

TIP Ask questions! If you are not clear, take the time to check. Many of our late and missed trips happen because of a misunderstanding at the time the booking is made.

Can I take more than one trip a day on Access?

Yes. You can take multiple trips on Access per day. We ask that you schedule your next pick-up time at least 30 minutes after you are to be dropped off by an Access van.

How do I confirm my ride?

Your trip is confirmed when you make your reservation. If you want to check the time and day of your scheduled trips, call the Access Rideline at 206-205-5000.

How do I change my trip?

You can change your trip reservation time by calling the Access Rideline at 206-205-5000 before 5 PM on the day before the trip. You must change the reservation time by more than one hour. So if you have a 9 AM pick-up on Tuesday, you can call before 5 PM on Monday and change it to an 8 AM or earlier pick-up or a 10 AM or later pick-up.

How do I cancel my trip?

Call the Access Rideline to cancel as soon as you know you can't take the trip. You must cancel your trip at least two hours before your pick-up window begins or we may record that you cancelled late.

Tell us when you want to cancel a ride the day before or as soon as possible. If you don't need your trip, we can offer the space to another customer. We schedule your ride with other customers, so canceling your ride the day before gives us more time to change the schedule to make sure the van is not too early or too late for other customers. So let us know when you know.

What if I reserve a lot of trips to the same places?

We offer a Standing Ride service for people who often take the same trip at the same time. We can also register addresses you use often so that you can reserve a ride faster.

Standing Ride – same place, same day and time: This is also called Subscription Service. We pick you up and take you to the same place, at the same time, on the same day, every week. You only call to cancel.

Consider requesting a standing ride if you have a trip that fits all of the following requirements:

- Trip is taken at least once each week on the same day;
- Trip is between the same locations and at the same time;
- Trip has been taken consistently over the previous 30 day period;
- Trip is expected to continue for six months.

You must use your standing ride at least 50% of the time. If you cancel more than half of your standing ride trips in any 30-day period or if you consistently cancel part of your standing ride, we will stop providing the standing ride.

Standing rides are cancelled on holidays, so call us one to seven days before the holiday if you still need to use your standing ride on a holiday. You can also place a standing ride on hold for up to 90 days. Call the Access Rideline at 206-205-5000 and talk with a Reservationist to set up a standing ride.

Registered Address – same place, different days or times. Help us save time and reduce errors by registering addresses you go to frequently. We will give you an abbreviation for each address you register. When you call to reserve a trip, use the abbreviation and tell us the day and time you want to go.

What if I need to travel to another county?

Access vans only travel in King County. If you need a ride to Snohomish, Kitsap, or Pierce counties, we will provide an Out of County Transfer. This means that you will ride Access for the King County part of your trip, and the other county's paratransit provider will meet you at a transfer location to take you the rest of the way.

We accept reservations up until 5 PM. However, to guarantee your out of county trip, we encourage you to call your home paratransit office by 4:30 PM the day before you want to travel. This gives us time to work with the other county's paratransit provider to schedule your trip.

What if I need to take a ferry?

Access will bring you to the ferry dock where you will de-board the van, pay the ferry fare and then board the ferry on your own. When the ferry arrives at the other side you will meet another paratransit vehicle that will take you to your destination. We will schedule a 30-minute pick-up window for this vehicle that will start sometime after the ferry docks.

What if I want to travel on a holiday?

Access service is limited on bus service holidays. These holidays are:

- New Year's Day*
- Martin Luther King Jr. Day
- President's Day
- Memorial Day*
- Independence Day*
- Labor Day*
- Veteran's Day
- Thanksgiving Day and the day after*
- Christmas Day*

*Standing rides are cancelled on these days. When you need a ride on these days, remember to call the Access Rideline at 206-205-5000 to schedule it.

How does Access select pick-up locations?

When you reserve your first ride to a new destination, Access will send someone to do a site visit at the location and make sure we can provide the service you have been certified to receive. We will let you know if there is a problem or if there are special instructions we need you to follow.

When Access performs a site visit, we look for safe, legal and reliable pick-up and drop-off spots. We check to make sure the van has room to park and turn around and that the driver can see the van at all times. If an address has many buildings and entrances, we may tell you to meet Access at a specific stop on site. If you have a safety concern, contact Accessible Services at 206-205-5000 and ask for a site evaluation.

What does Access do with my reservation?

While you are on the phone, the Reservationist is using a computer booking system to confirm your information, check for space and available pick-up and drop-off times, and book your trip.

Many trips are placed on local routes based in one part of the county; other trips are may be scheduled on vans that focus on longer trips across the county. Each route will have different pick-ups and drop-offs each day, and the Reservationist will look for spaces in the schedule where they can insert your pick-up and drop-off.

Why am I given a 30-minute window instead of an exact time for my pick-up?

From the time you book your ride to the day of your ride, schedulers are adding customers and moving reservations. Being able to work with a window of time gives us the opportunity to move your actual pick-up time a little earlier or later to serve more customers. Traffic and weather also affect Access van arrival times. Starting 15 minutes before your scheduled pick-up window, you can call the Access Rideline at 206-205-5000 to check your ride's estimated time of arrival (ETA).

How does Access decide how to route customers?

There are many factors that go into scheduling. Think about it like running errands in a day. One day you may need to buy stamps at the post office, pick up your dry cleaning and buy food at the grocery store for tonight's dinner, while keeping in mind that the stores close at different times. You would need to follow a particular order to get to the places you need to go before the

stores close. You may even need to travel past one store to get to another.

Similarly, your Access driver needs to take you and the other customers with different appointment times to different stops.

When we make each day's schedule, we do our best to pick up and drop off every customer within the reserved time window so that nobody is too late and nobody is too early. Sometimes this means that the van will go out of your way to pick up or drop off somebody else first. The van may even pass by your destination on the way to pick up or drop off another customer.

The van's schedule can also change on the day of your ride. About 20% of rides are cancelled on the day of the trip. When a customer cancels or misses a trip or an Access van is delayed, we have to change our schedules and routes in real time to accommodate all customers and minimize delays.

TIP To help us reduce unexpected delays and last-minute detours for all customers, cancel trips you won't use the day before.

Why do I sometimes arrive early for my appointment?

Our goal is to only drop you off a half hour (or less) from your appointment time. There are times when a trip before you is cancelled and your van gets you to your destination sooner than scheduled. Your trip may also be placed on an overflow provider which means that you will be taken to your destination directly. To minimize this, we may call you and negotiate a later pick-up time.

The Day of Your Trip

What should I do before the 30-minute window begins?

Before your 30-minute pick-up window begins, take time to prepare for your trip.

- Check the weather forecast and dress for it. Carry water on hot days and a coat on cold or rainy days. Bring medications and any snacks you need.
- Take a restroom break before boarding the van. There is no restroom on Access vehicles and drivers cannot stop.
- Take important phone numbers with you, including the Access Rideline number 206-205-5000.
- Make sure your mobility device is in good working order and your battery is charged.
- If you use oxygen, take a full tank in case your ride is longer than expected.
- Make sure you have your Access fare with you.

The 30-minute window is starting. What should I do?

Be ready with your coat at the beginning of your 30-minute pick-up window. Access can come at any time within that window. If possible, wait at a place where you can see the van or taxi arrive.

Watch for a taxi too. Access contracts with taxi companies when demand is high. You may receive an automated call a half hour before your pick-up window starts notifying you that we are sending a taxi. The taxi driver will perform the same level of service (curb-to-curb or door-to-door) that you receive from an Access driver.

TIP Can't see the van from where you wait? Consider using the **Advance Call & Advance Text Service**

How can I find out if the van is on time?

Access offers three ways to get information on your ride's estimated arrival time:

Advance Call & Advance Text: We can give you a call or send you a text message shortly before the van arrives to pick you up. The Advance Call and Advance Text service needs to be set up ahead of time with a Rider Services Representative. Call the Access Rideline at 206-205-5000 or visit www.kingcounty.gov/Access if you are interested in this service. The automated phone call upon arrival is a courtesy call and not guaranteed.

Access ETA: The Access ETA (estimated time of arrival) service allows you to call us 24 hours a day for real time trip information from our automated system.

Call the Access Rideline at 206-205-5000 (WA Relay: 711). At the main menu press 1 and follow the prompts. It will ask for your ID number and the year of your birth.

Use Access ETA to get your estimated:

TIP Pick-up time - beginning 15 minutes before your pick-up window begins.

TIP Drop-off time - after you've boarded the Access vehicle. This is very helpful if you need someone to be at your destination when you arrive.

Speak to a Reservationist: You can also call the Access Rideline and speak with a Reservationist during regular business hours. The Reservationist has the same information as the Access ETA automated line.

What happens when the van or taxi arrives?

The driver will wait by the van or taxi (for curb-to-curb service) or come to the outside door and announce their arrival (for door-to-door or hand-to-hand service). The van will wait five minutes for you to board. If the van comes early, the driver will wait until your pick-up window begins and then give you five minutes to board. If you are not at the pick-up spot or not ready to board in five minutes, the van will leave to stay on schedule.

When you are ready to board, the driver will ask your name to confirm your trip. The driver will help you individually board the van. Please use the safety equipment (such as handrails) at the driver's direction. If you use a mobility device or would like to board using the lift, the driver will ask you to board using the lift manufacturer's instructions. The driver will secure you and your mobility device once you are on board.

When you are on board, the driver will ask you for your $1.75 fare (plus any extra for companions) if you do not have a current pass. There is no fare box on Access; give your fare to the driver.

Usually you can choose where you sit. Sometimes the driver will direct you to a seat if other space is needed for another customer or a mobility device.

You must stay seated and secured during your trip. The driver will take the route shown on the schedule. The van may pick up or drop off other customers along the way.

At the end of your trip, remain seated until the driver is ready to help you individually off the van. Your trip back will work the same way.

The 30-minute window has ended but the Access van or taxi has not arrived. What do I do?

If a van or taxi doesn't come during the 30-minute window, call Access Rideline at 206-205-5000 right away and press #3 to speak to a dispatcher. Tell them exactly where you are waiting, and we will get a van to you as quickly as possible.

We do our best to make sure everyone is neither too early nor too late. But delays and other problems happen sometimes. In some cases we will send another van or a taxi to prevent a longer delay.

There are many reasons that your trip may be late, such as traffic, van breakdowns, or bad weather. There may have been a problem on an earlier trip that caused a delay or a sudden schedule change. Sometimes there was a miscommunication when the reservation was made or Access makes a mistake.

Access went to the wrong location. What do I do?

If Access made a mistake and went to the wrong location, the late cancellation will be taken off your record. Call the Access Rideline if you think a late cancellation was recorded that was beyond your control.

TIP Consider carrying a cell phone when you wait away from a phone.

My appointment ended early. Can I get picked up earlier?

Sometimes. Call the Access Rideline as soon as you can and speak to someone in Dispatch. They will check the schedule to see if we can pick you up early. If your trip is long or there are not many Access vans in your area, or there is heavy traffic, it is unlikely that we can get to you any earlier.

My appointment ran late and I missed my ride. What do I do?

We will not leave you stranded. If your appointment runs late and you cannot meet the van or taxi, call Access Rideline 206-205-5000 as soon as you can to ask for a "Will-Call" ride. We will try to find space for you on another van. This can take time, so we may ask you to call back in 15 minutes for your will-call ride. Most customers get picked up within 90 minutes. The trip you missed will not be recorded as a late cancellation.

Can I call on the same day as my ride and ask to be dropped off at a different place?

No. We can't change your drop-off or pick-up location on the day of your trip. You must call before 5 PM the day before your ride is scheduled. Just like a bus driver, Access drivers must follow the scheduled route. Whenever your pick-up or drop-off location changes, we have to change your route or move you to a different route. The driver cannot make stops on the way for you to run errands.

How long will my trip be?

The length of your trip will vary depending on how many other pick-ups or drop-offs are scheduled on the way to your destination. If there is no one else on your route, the trip could be shorter than a bus ride. Sometimes it is a little longer. Most of the time it will be similar.

Our goal is to have 97% of all scheduled trips take no more than 15 minutes longer than the same trip on non-commuter fixed-route bus service. Traffic, weather, and other delays sometimes affect Access and fixed-route service.

TIP Go to the Metro Online Trip Planner and plan your trip on a Metro bus. This gives you the approximate trip length on Access. **kingcounty.gov/tripplanner**

Will I have to transfer to another van? How does that work?

You may have to transfer to another van when you are going long distances or across county lines. Just like the bus, Access will take you to a predetermined transfer location where you will wait for your transfer vehicle.

When Something Goes Wrong

This section will tell you more about some of the things that can go wrong on Access and some of the violations that can cause you to lose your ability to ride Access.

I cancelled a trip late, or I missed a trip and did not cancel. What will happen?

If you will miss a trip for any reason, call the Access Rideline at 206-205-5000 as soon as you know you can't take the trip. Someone is available 24 hours a day.

You must cancel at least two hours before your pick-up window begins. If you cancel too late, or miss the trip and do not call to cancel, we will record a "late cancellation." A no-show or late cancellation will be recorded:

- If the ride is cancelled less than two hours before it is scheduled to begin;
- If the customer is not at the agreed upon pick-up spot during the 30-minute pick-up window;
- If the customer doesn't board within five minutes from when the Access van arrives during the 30-minute pick-up window or;
- If the customer has hand-to-hand service but a responsible person was not present for the handoff.

We take late cancellations seriously. When any customer cancels a trip, we have to change the route and the schedule to make sure the van still runs on time for other customers. When a customer cancels late or misses a trip, it wastes resources and causes

delays for other customers. Call us even if you are cancelling late; if you don't let us know, we lose the chance to use those resources for other customers and you will be given a late cancellation. So call us at 206-205-5000.

Return Trips: After each late cancellation we will send you an automated phone call to confirm if you want to cancel any return trip. We will not cancel any of your scheduled trips unless you tell us to cancel them. To avoid further late cancellations please cancel these trips as soon as possible.

Excused Late Cancellations: If you have to cancel because you got sick, your appointment ran late, or another emergency beyond your control happened and you can't go as planned, explain the emergency when you call us and the late cancellation may be excused for that trip.

Suspension for Late Cancellations: We may suspend you from riding Access if we record an unexcused late cancellation or no-show for 15% or more of your trips in a calendar month. We will send you a letter in the mail to notify you of the proposed suspension and how long it will last.

If you do not agree that you should be suspended from Access, you have the right to ask Access to review the suspension. We will not suspend you while we review your case. You must ask for the review by calling 206-263-0777 or sending a letter to: King County Metro Accessible Services, 201 S. Jackson Street, KSC-TR-0800, Seattle, WA 98104 within 10 days after we send you the suspension letter. You should include important information in your letter. Access staff will review your case and tell you the results of the review within 10 days after we receive your request.

I missed a trip and still need a ride home. What do I do?

Anytime you miss a connection with the van and you need a ride home, call us right away. We will find an available seat to take you home, but the van may arrive later than your original pick-up time.

If your ride started from home, we will not send a replacement vehicle to pick you up.

If you have other rides scheduled that day call us to check-in. Let us know if you still need the ride or if you want to cancel.

I have hand-to-hand service, but nobody was there to meet the Access van. What will happen?

If a responsible person is not at the customer's destination to meet a customer who has a hand-to-hand service level, the Access driver will keep the customer on the van and continue on their route. Access dispatch will call contact numbers and arrange for caregivers to meet up with the van. A late cancellation will be recorded when this happens. If there is a pattern of no one to receive a hand-to-hand customer, we may suspend the customer from service.

What is the Metro Code of Conduct, and what happens if I do not follow it?

The Metro Code of Conduct is a set of rules that we ask all customers to follow. Some of the most important rules are printed on the next page of this guide. You can find the entire Code of Conduct online: www.kingcounty.gov/metro/riderright or by contacting King County Metro Transit Police 206-477-0900.

Metro's Code of Conduct

- No eating or drinking. Customers who have a medical need may obtain an exception from Access Transportation.
- Must pay fare.
- No alcoholic beverages.
- No smoking.
- Respect others by not engaging in loud, unruly, harmful, abusive or harassing behavior.
- Wear headphones when playing a radio, tape recorder, or audible game.
- Do not block an aisle or occupy a seat that has not been paid for.
- Do not cause unreasonable delays: delay the Access van, impede passenger movement or interfere with Access service.
- Odors that unreasonably disturb others are not allowed.
- Dangerous weapons are not allowed.
- Impersonating a transit employee or official will not be allowed.

If you do not follow the Code of Conduct, Access will work with you, or your caregiver, to change the behavior. If the violations continue or if they are threatening to others, you may be expelled from the vehicle, suspended from Access service, or both.

Expulsion: You may be immediately expelled from service for up to 7 days if the misconduct is threatening to Access staff or another customer or if there is a possibility of personal injury or property damage. The driver or a road supervisor will transport you to your home and give you

a notice of expulsion. We will not send a replacement trip for you if:

- You request to disembark from the vehicle before reaching his/her destination.
- You refuse to follow applicable operational and/or safety policies required for transport.
- You demonstrate inappropriate, aggressive, threatening, or abusive behavior toward others.
- We may also suspend your ability to ride Access.

Suspension: A customer who has been expelled, or who Access finds has a documented pattern of misconduct, may be suspended from service.

A first suspension is usually no more than 30 days. If a customer has a prior suspension or is being suspended for severe misconduct, the suspension may last longer than 30 days. In extreme cases the customer could be suspended indefinitely. If a customer is suspended indefinitely, the customer may request a review of the suspension after 12 months.

Suspended customers receive a written suspension notice that is delivered to them or mailed to their home. We also give customers a courtesy call to let them know about the suspension. Suspended customers may not reserve trips or board any Access vehicle. Customers who do not comply with a suspension order may be prosecuted for criminal trespass.

If you have been notified that Access has suspended you for misconduct, you have the right to request a review of the suspension. You must ask for the review within 10

days after we send you a suspension letter by sending a letter to: King County Metro Accessible Services, 201 S. Jackson Street, KSC-TR-0800, Seattle, WA 98104. You should include relevant information in your letter. You may also request a review of the suspension over the phone 206-263-0777. You may ask to be heard in writing, in person, or over the phone. We will schedule a hearing if you ask for one, and we will make a final decision on your suspension within 10 days after the hearing. Your suspension will be placed on hold during your appeal.

You did not pay your fare. What will happen?

You are expected to pay a fare for each Access trip. If you do not pay your exact fare on a trip, you can still take your trip but we will record the fare nonpayment.

If you don't pay your fare you may receive a phone call or an educational letter. We want to make sure every rider understands our fare system. If you still are not paying your fare, you may be suspended from Access service. During a suspension you cannot take any trips on Access.

Suspensions for fare nonpayment are progressive, each suspension within a year gets longer. Suspension periods are as follows:

- First Suspension - 7-days
- Second Suspension - 14-days
- Third Suspension - 21-days
- Fourth Suspension - 28-days
- Additional Suspensions - 28-days per incident

Our goal is to make sure that all riders are paying their "fare" share. We do not criminalize fare nonpayment nor

do we try to collect past amounts due.

If you do not agree that you should be suspended from Access, you have the right to ask Access to review the suspension. We will not suspend you while we review your case. You must ask for the review by calling 206-263-0777, emailing Accessible.Services@KingCounty.gov or sending a letter to Accessible Services at: 201 S. Jackson, Seattle WA 98104 Mailstop KSC-TR-0800 within 10 days after we send you the suspension letter. You should include important information in your email or letter. Access staff will review your case and tell you the results of the review within 10 days after we receive your request.

There are a couple of alternatives to Access which offer free or donation based services:

- Sound Generations' Hyde Shuttles at 206-727-6262 provides free door-to-door van service throughout many communities in King County. Hyde Shuttles travel only inside their local service areas and you can register by phone if traveling in one of the service areas and you are either aged 55 and older and/or living with disabilities.
- The Solid Ground free downtown Seattle circulator bus provides a weekday shuttle for people living on low incomes. Call 206-753-4801 for more information.
- Hopelink also provides Non-Emergency Medical Transportation in King and Snohomish counties for medical services covered by Medicaid. To schedule a ride in either King or Snohomish County between 8 AM - 5 PM, please call 800-923-7433.

To find resources that offer financial help to pay for transportation, call the 2-1-1 King County Information Line.

There is snow or other bad weather. What do I do?

Access has limited service when there is snow or bad weather; expect delays. Access vans can't reach you when there are slick or closed streets. Sidewalks, driveways and ramps also need to be clear.

When the weather is bad, don't go out if you don't need to. Call 206-205-5000 and cancel your rides if you decide it is not safe. Late cancellations are not counted during bad weather. Call Access Rideline at 206-205-5000 or visit metro.kingcounty.gov/alerts in advance, to find out if we are serving your area.

If we are serving your area, we will send out a van. Once they are closer to you the driver will make the final decision if your trip is possible. You may receive an automated call if service in your area is cancelled.

If you need to travel and weather permits, dress appropriately. On bad weather days the interior of the van may become hot or cold because doors may need to be left open for longer periods of time to operate the lift. The driver is not able to control these temperature changes.

During extreme weather conditions all rides are cancelled including standing rides. We will try to provide life sustaining trips such as those to dialysis, chemotherapy or methadone treatment. Call Access Rideline at 206-205-5000 if you need transportation for medical reasons.

What will Access do if there is an earthquake or another disaster?

In the event of a natural or man-made disaster, Access may not be able to continue to provide services and will make every attempt to notify customers by phone, radio, television, and website announcements. If a disaster occurs, call Access Rideline at 206-205-5000 to find out if Access is still serving your area. We will do our best to transport all of our customers, but in extreme emergencies it may be necessary to refer customers to 911. Please note that Access is not responsible for 911 charges or emergency transport.

What will Access do if there is a medical emergency on board?

Access drivers are trained in First Aid and CPR. If a medical emergency occurs on board, the driver will contact the Access Call Center, who will call 911. The responding emergency medical technicians (EMTs) will decide if the customer needs to go to the hospital. The customer may refuse medical attention from the EMT professionals and continue to their destination if and when released by the EMT professionals. Please note that in the event the customer refuses medical attention and chooses to continue to their scheduled destination, Access or its agents are not responsible for that decision.

I lost something on Access. What do I do?

Items found on the van are kept in our Lost and Found for 30 days. Call Access Rideline at 206-205-5000 and press 4 to speak to Access Rider Services. We will ask for a description of your lost item and the date and time of your trip.

Items can either be returned to you by Access when a van is in your neighborhood or you can arrange to pick them up.

If you find a lost item on the vehicle, please give it to the driver.

Tell Us How Your Trip Went! How do I comment on my experience with Access?

If something went wrong or right with Access, we want to hear about it. We want to know right away when something happens that doesn't seem right to you or when something doesn't work. And when your trip goes well, your praise is passed on to the staff.

You can complain about poor service, commend good service, or send us other comments about Access by contacting Metro Customer Service in the following ways:

- Online form kingcounty.gov/metro/access/comments
- You can call us at 206-205-5000
  press 4 then 2, Monday– Friday 8 AM to 5 PM.
- Send your comments on the postage paid comment cards stored in the information rack on the vans.

Please provide the date and time of your trip and as much detail as possible when you contact us. You can decide if you would like us to send you a reply. We also protect your privacy. Tell the Metro customer service representative when you are concerned about an employee knowing it was you who complained. We do not tolerate acts of retaliation.

If you ask for a reply, we will send you a notice within three days to let you know we received your information. We research each problem reported to us and send you the results if you asked for a reply. If you asked for a reply, we will call you or send you a letter in the mail to tell you the results of our research within 10 days of our receiving your information.

What if I disagree with the complaint response?

If you disagree, you may ask the staff of Accessible Services to reevaluate your complaint.

If you still disagree, or the problem keeps happening, you may contact the King County Transit Ombuds at transitombudsmail@kingcounty.gov or 206-477-1050.

The transit Ombuds cannot overrule Metro's decision, but they can help by:

- researching your problem and Access' response,
- finding out and explaining what happened and why,
- working with you and Access to solve the problem,
- recommending changes to Access to prevent future problems for you and other customers.

Does Metro have a policy against discrimination?

Yes. King County Metro Transit operates its programs without regard to race, color, national origin, religion, sex, sexual orientation, marital status, age or disability in accordance with applicable law.

For more information on Metro's non-discrimination policies, or to file a discrimination complaint, you may call Metro's Customer Information Office at 206-553-3000. You may also contact Metro in writing at the following address: General Manager, King County Metro Transit, KSC-TR-0415, 201 S. Jackson Street, Seattle, WA 98104.

Making a Title II complaint - ADA Policy

The Americans with Disabilities Act, Title II, states, in part, "No otherwise qualified disabled individual shall, solely by reason of such disability, be excluded from the participation in, be denied the benefits of, or be subjected to discrimination in programs, services or activities sponsored by a public entity." King County Metro is committed to complying with the requirements of Title II of the ADA in all of its programs, services, benefits and activities.

ADA Grievance Procedure – Submitting a Title II Grievance.

All grievances concerning discrimination in provision or accessibility of King County Metro programs, services, benefits or activities, or about a response to a request for accommodation or modification of programs, services, benefits or activities, should be submitted to King County

Metro. A formal grievance may be submitted by any of the following methods:

Grievances can be mailed to:

King County Metro ADA Coordinator
Metro Transit Division
KSC-TR-0426
201 S. Jackson Street
Seattle, WA 98104

Grievances can be submitted by phone at: 206-477-2883 or by email ada@kingcounty.gov

The grievance should be submitted as soon as possible and no later than 60 days following the actions upon which it is based. The grievance must describe the facts, including, if applicable, the date, time and location of the actions that are the subject of the grievance, and must state the requested remedy. Persons submitting grievances must include their name, address, telephone number and an email address, if one is available.

Within 15 calendar days after receipt of the grievance, the ADA Services Administrator, or his/her designee, shall meet with the person making the grievance to discuss the grievance, gather additional information and identify possible resolutions. Within 21 calendar days following the meeting, the ADA Coordinator or designee shall respond to the grievance in written or another accessible format. The response shall explain King County Metro's conclusions regarding the allocations made by the person who made the grievance and, if appropriate, suggest options for resolving the grievance.

Review of Grievance Request

The person making the grievance may request review of the grievance if she/he is dissatisfied with the ADA Coordinator's response or proposed resolutions. Review requests must be made within 15 calendar days from the date of the ADA Service Administrator's response and may be submitted by mail, phone or fax.

Requests for grievance review can be made to:

KING COUNTY METRO ADA Coordinator
Attn: ADA Grievance Review Request
Metro Transit Division
KSC-TR-0426
201 S. Jackson Street
Seattle, WA 98104

Within 21 calendar days after receipt of the review request, an ADA Coordinator shall either respond to the grievance in written or other accessible format or will contact the person making the grievance to obtain any necessary additional information. If additional information from the person who made the grievance is requested, the ADA Coordinator shall provide a response to the grievance within seven days following receipt of the additional information.

All grievances and grievance review requests submitted to the ADA Coordinator in written, electronic or recorded format, as well as responses thereto, will be retained by King County Metro for at least three years.

Reasonable Modifications

King County Metro is committed to providing transportation to people with disabilities within our service boundaries. On a case-by-case basis we will make reasonable modifications to our policies and practices to ensure access to our public transportation services. We will not make modifications if they:

- cause a direct threat to the health or safety of others, or
- fundamentally alter our service or vehicles, or
- are not essential for allowing a rider to access service, or
- result in an undue financial or administrative burden.

To discuss a request for a modification, please contact the ADA Coordinator by phone at 206-477-2883,
by mail at 201 S. Jackson St, KSC-TR-0800,
Seattle, WA 98104
or by email ada@kingcounty.gov.

Making a Title VI complaint

Any person who believes he or she has been aggrieved by an unlawful discriminatory practice under Title VI may file a complaint with King County. Any such complaint must be filed with King County within 180 days following the date of the alleged discriminatory occurrence.

For information on how to file a complaint, contact King County by any of the following methods: King County Office of Civil Rights, Chinook Building, 401 Fifth Avenue, Suite 800, Seattle, WA 98104 Phone: 206-263-2446, WA Relay: 711, Fax: 206-296-4329.

Index

30-minute pick-up window – 4, 32, 33, 36, 38, 40, 43, 46
Access Certification office – 8, 13-14, 16
Access Transportation – 7, 14-16
Accessible formats – 6, 59-60
Accessible Services – 4, 12, 14, 19, 20, 23, 24, 37, 47, 50, 51, 57, 66
Americans with Disabilities Act (ADA) – 7, 12, 14-15, 18, 58-61
Applying for Access – 12-16
Appointment time – 30-31, 39
Automated call – 41, 53
Bad weather – 40, 43, 53
Bags – 5, 21, 26
Barriers – 7, 13, 33
Booking a trip – 8, 23, 29, 35
Bus – 7-11, 13-15, 18, 20, 29, 33, 37, 41, 44-45, 49, 52, 66
Cancelling trips – 4, 6, 8, 29, 34-35, 37, 39, 43-44, 46-48, 53
Cash – 4, 10, 28
Certification – 8, 13-14, 16
Changing pick-up time – 34, 39, 43-44, 46
Chemotherapy – 53
Child, Child seat – 23, 32
Comments – 56, 66
Companion – 8, 22-23
Complaint – 57-58, 61
Conditional eligibility – 13, 33
Confirm my ride – 33-34, 38, 42, 47
Contact Information – 66
Crossing county lines – 9
Curb-to-Curb service – 20
Metro Customer Service – 12, 16, 28, 56, 66
Day of the ride – 26, 38-40, 44
Delays – 10, 39, 43, 45, 47, 53
Dialysis – 53
Disaster – 54
Discount – 10, 28, 52
Dispatch – 43-44, 48

Door-to-Door service – 2, 20, 40, 42, 52
Driver assistance – 5, 9, 18, 20-22, 25-26, 42

Drop-off location – 4, 8-9, 20, 33, 37, 44
Drop-off time – 30-39, 41
Early pick-up – 33-34, 39, 42-44
Eligibility – 8, 12-16, 20, 33
Emergency – 21, 47, 52, 54
Emergency contact – 5, 29
Estimated Time of Arrival (ETA) – 38, 41
E-purse – 10, 28
Expulsion – 49-50
Fare – 2-3, 10, 23, 25, 28, 36, 40, 42, 51
Ferry – 36
Fixed route transit – 7-8, 15-16, 18, 45, 66
Free accessible transportation – 52
Full eligibility – see Unconditional eligibility
Grocery – 18, 32, 38
Grocery cart – 32
Hand-to-Hand service – 20-21, 42, 46, 48
Harborview Medical Center – 13
Holidays – 37
Hopelink – 52
Hyde Shuttle – 52
Intercity Transit – 15
Interpreter – 6, inside back cover
Island County Transit – 15
Jefferson Transit – 15
Kitsap County – 9, 36, 45
Kitsap Transit – 15
Language interpreter – 6, cover, inside back cover
Language line – inside back cover
Late trip – 33-34, 38-39, 43
Late cancellation – 34, 43-44, 46-58, 53
Length of trip – 13, 45
Level of service – 20-21, 40
Life sustaining rides – 53
Lift – 21, 24, 42, 53
Light rail service – 7-14, 18-19, 33
Lost and found – 55
Luggege – see Bags

Medicaid – 52
Medical emergency – 54
Metro's code of conduct – 48-49
Missed trip – 8, 46-48
Mobility device – 9, 22-25, 27, 29, 32, 40, 42
Motorized wheelchairs – 24
Non-Emergency Medical Transportation – 52
Off-board payment – 28
Ombuds – 57, inside back cover
Online – cover, 4, 6, 12, 28, 30, 45, 48, 56
ORCA – 10, 28, 66, 67, inside back cover
Out of County transfer – 36, 45
Oxygen – 40
Packages - see Bags
Partial eligibility – see Conditional eligibility
Pass (Access monthly pass) – 10
Peak hours – 31, 40
Personal Care Attendant (PCA) – 8, 22-23, 29
Personal shopping cart – 25
Pet – 25, 32
Pick-up, early – 33-34, 39, 42-44
Pick-up location – 37, 44
Pick-up time – 30, 34, 41, 48
Pick-up window – 4, 33, 42, 46
Pierce County – 9, 36, 45
Pierce Transit – 15
Privacy – 11, 56
Qstraint loops – 25

Reasonable Modifications – 20, 60-61
Reduced Fare Pass (RRFP) – 10
Regional Rider – 15
Reserve a trip – 8, 23, 29, 35, 37
Restroom break – 40
Rideline – 13, 29, 32-35, 37-38, 40-41, 43-44, 46, 53-55, 66, inside back cover
Same day trips – 29, 44
Scheduling a ride – 4, 8, 23, 29-30, 34-37
Schedule change – see Changing pick-up time

Scooters – 24
Seat – 5, 20-21, 23, 25-26, 32, 42
Seat belt – 21, 23, 26
Securement & Securement Waiver – 25-27
Service animals – 25, 32
Service area - 18-19, 52
Service level – 20
Shopping cart – 25
Site visit – 37
Skagit Transit – 15
Snohomish County Community Transit – 15
Snohomish County – 9, 15, 36, 45, 52
Snow – 53
Specific stop – 33, 37
Standing rides – 35, 37, 53
Subscription service – 35
Suspension – late cancellation – 47-49
Suspension; misconduct – 49-50
Suspension; nonpayment of fares - 51
Taxi – 9, 28, 40, 42-44
Thirty-minute window – see 30-minute pick-up window
Title II of ADA policy – 58-59
Title IV complaint – 61
Transfer – 9, 36, 45
Transit instruction – 17
Traveling across King County lines – 36, 45
Trip duration/length – 10, 45
Trip routing – 9
TTY – see Washington State Relay
Unconditional eligibility – 13
Visitor – 15-16
Walker – see Mobility device
Washington State Relay – 6
Weather – 5, 10, 38, 40, 43, 45, 53
Wheelchair - see Mobility device
Will-call ride – 44

Contact

To make a reservation or check your ride status:

Access Rideline ..... 206-205-5000, WA Relay: 711

Toll Free Line 1-866-205-5001

Reservations ..... Open 7 days a week, 8 AM - 5 PM

Ride Status .....Open 24 hours, 7 days a week

Mail ..... 675 S Lane St, Suite 400, Seattle, WA 98104

Email ..... Access.RiderServices@kingcounty.gov

Web ..... www.kingcounty.gov/Access

To find out more about your eligibility to ride Access:

Access Certification office ..... 206-263-3113 (Mon., Tues., Thurs., Fri., 8:30 AM to 4:30 PM & Wed., 8:30 AM to 12 noon)

TTY Users .....Washington State Relay: 711

Mail ..201 S. Jackson St, KSC-TR-0800, Seattle, WA 98104

Email .....accessible.services@kingcounty.gov

Web ..... metro.kingcounty.gov/tops/accessible

To tell us when something went wrong or right:

Metro Customer Service ..... 206-205-5000 press 4 and then 2 (Monday- Friday 8 AM to 5 PM.)

TTY Users .....Washington State Relay: 711

Web .....kingcounty.gov/metro/access/comments

To plan a trip on fixed-route bus or train:

Metro Customer Service ..... 206-553-3000 press 5 (Monday- Friday 8 AM to 5 PM.)

TTY Users .....Washington State Relay: 711

Web .....tripplanner.kingcounty.gov

To learn about the ORCA Pass system and how to use it:

ORCA Card 1-888-988-6722

TTY Users .....Washington State Relay: 711
Web ..... www.orcacard.com

https://www.kingcounty.gov/depts/transportation/metro/fares-orca/orca-cards.aspx

To find transportation providers and agencies that offer help with transportation costs:

2-1-1 King County Information Line 2-1-1

For more King County resources:

King County Metro Transit Police 206-477-0900

King County Transit Ombuds 206-477-1050

Email ..... ombudsmail@kingcounty.gov

King County Office of Civil Rights..... 206-263-2446
TTY Users .....Washington State Relay: 711
Fax 206-296-4329

Mail ..... 401 Fifth Avenue, Suite 800, Seattle, WA 98104

Language Line – speaking your language:
Tell us what language you speak best, and we will call an interpreter. If your client record indicates a preferred language, we will automatically contact an interpreter when you call. This takes a minute while we connect with the Language Line. This is a free service for you.

Interpreter 206-263-3113

Intérpretes Turjubaan Переводчик Перекладач 통역사 የቃል አስተርጓሚ 翻譯員 Thông Dịch Viên ኢንተርፕሪተር

You can also read the RideGuide online at
kingcounty.gov/AccessRideGuide