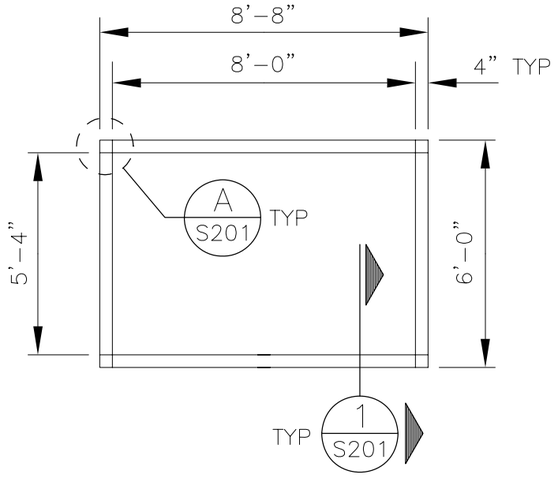

PLAN

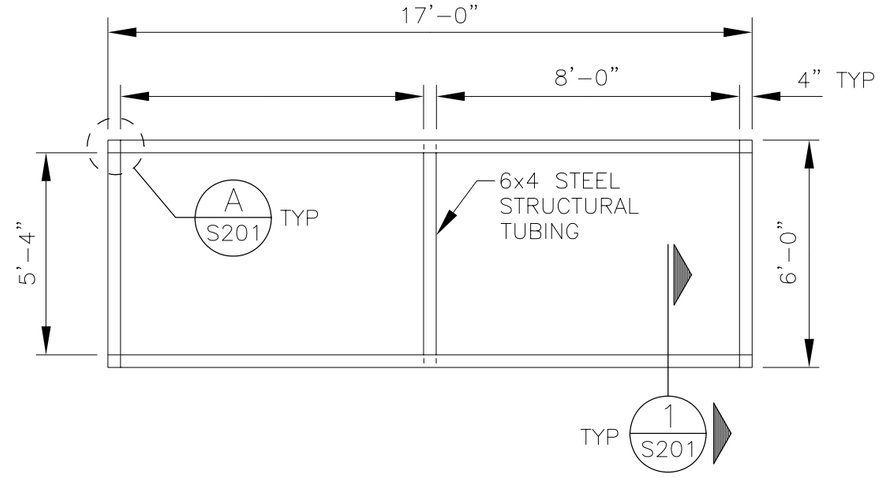

PLAN

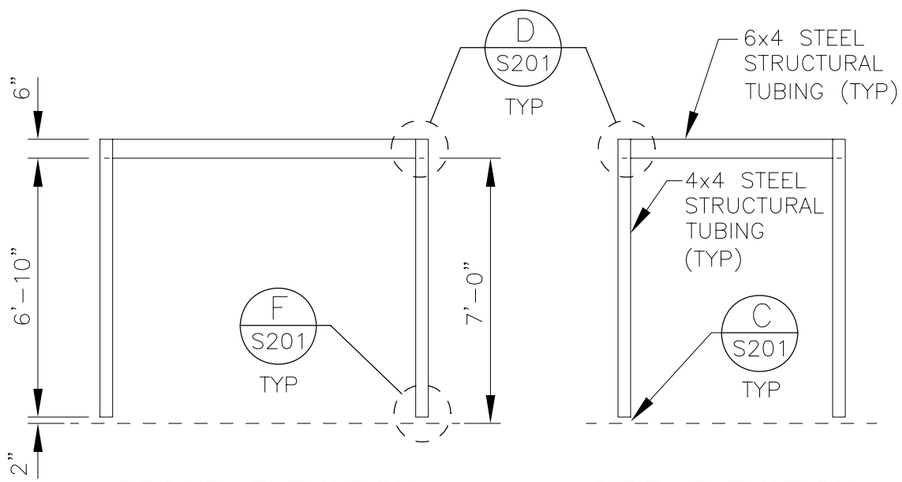

FRONT ELEVATION

SIDE ELEVATION

F11-FRAME

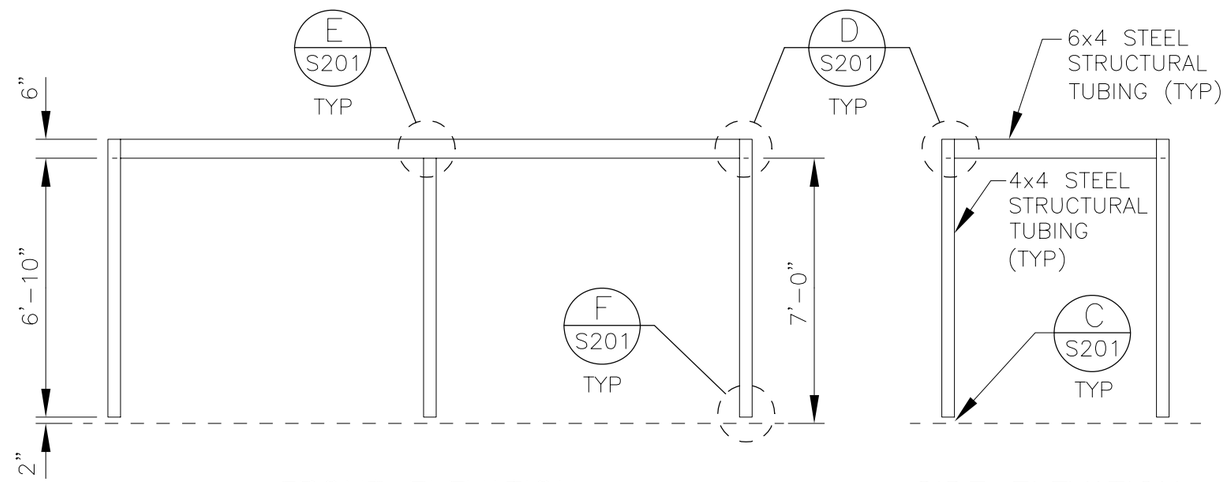

FRONT ELEVATION

SIDE ELEVATION

F12-FRAME

NOT FOR CONSTRUCTION

King County	DESIGNED PE	Department of Transportation – Transit Division		DATE: MAR 05
	DRA: LSA / CHKD:	SCALE: 1/4"=1'-0"	FABRICATION AND DELIVERY OF TRANSIT PASSENGER SHELTER FRAMES	FILE
	RECOM. PE	CONTRACT:	FRAME – SERIES 10 (F11 & F12)	DWG. NO. S101
	APPROVED	IFB00-045		SHT 2 OF 8

V:\Library & Standards\Standards\PFPMetro\PFP Standard Shelter Structural Set\S101_3-15-05.dwg XREFS: B-FIXED
Dec 02, 2005-10:02:59am By SuterJ