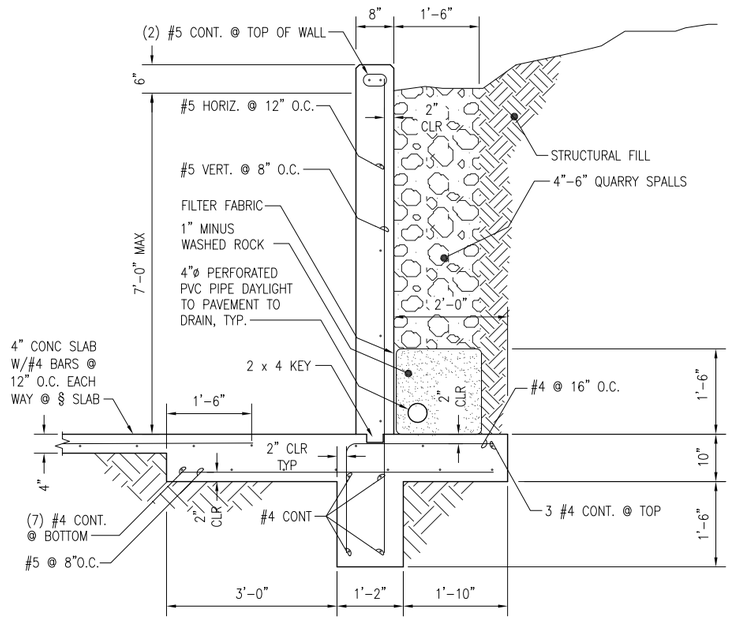

TYPICAL COUNTERFORT WALL TYPE I ELEVATION

DETAIL 1

SCALE: 3/4"=1'-0"

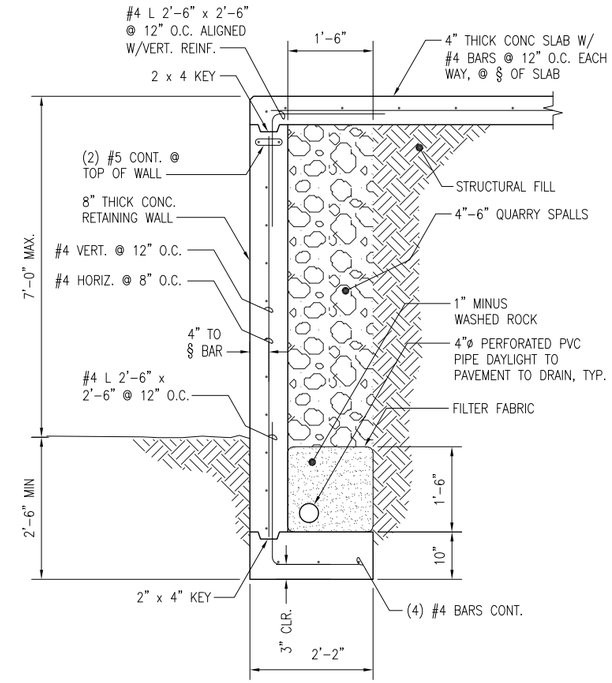

TYPICAL COUNTERFORT WALL II ELEVATION

DETAIL 2

SCALE: 3/4"=1'-0"

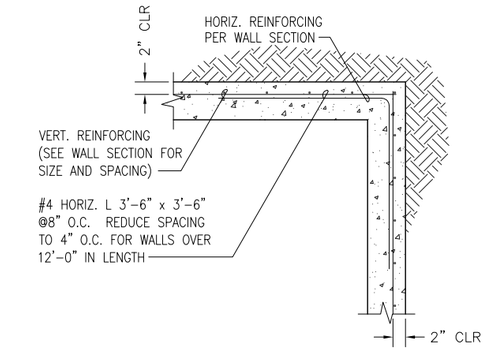

TYPICAL COUNTERFORT WALL CORNER

DETAIL 3

SCALE: 3/4"=1'-0"

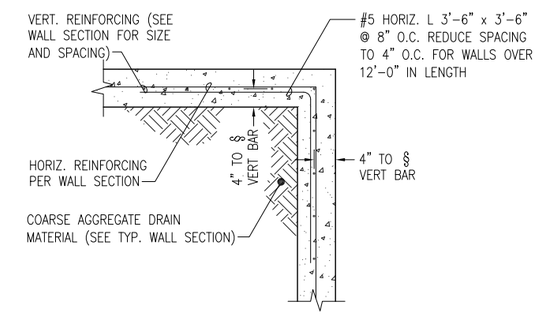

TYPICAL COUNTERFORT WALL CORNER

DETAIL 4

SCALE: 3/4"=1'-0"

KCMT 2020-2021 STANDARD DETAILS				
No.	REVISION	BY	APP'D	DATE

AKB ENGINEERS, INC.
16205 NE 44th Court
REDMOND, WA 98052
Phone: 425 5038974

811 Know what's below. Call before you dig.

DESIGNED: K. CHANG YUEN	APPROVED: D. CRIPPEN
DRAWN: G. CAREY	
CHECKED: K. CHANG YUEN	PROJECT NO: -
CHECKED: C. ASQUITH	CONTRACT NO: -

King County METRO

METRO TRANSIT CAPITAL DIVISION
TRANSIT PASSENGER FACILIITES - IMPROVEMENTS

COUNTERFORT WALL DETAILS

DATE: 4/2020

DRAWING NO: D106

SHEET NO: 13 OF 20

I:\DOT.kingcounty.lcl\Transit\DO\CAD_Folders\Projects\Passenger Facilities\Standard Details\Passenger Facilities Standard Details\2020-2021 STANDARD DETAILS\D106.dwg | Layout: D106
PLOTTER: Apr 21, 2020-12:12:17pm By: GCarey
XREFS: KCMTD-BORDER.dwg
IMAGES: AKB.jpg