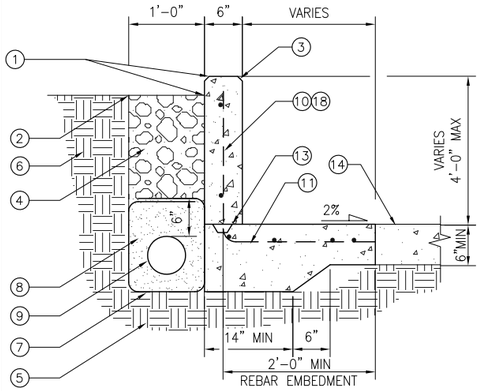

COMBINED RETAINING WALL– SIDEWALK

DETAIL 1
SCALE: NTS

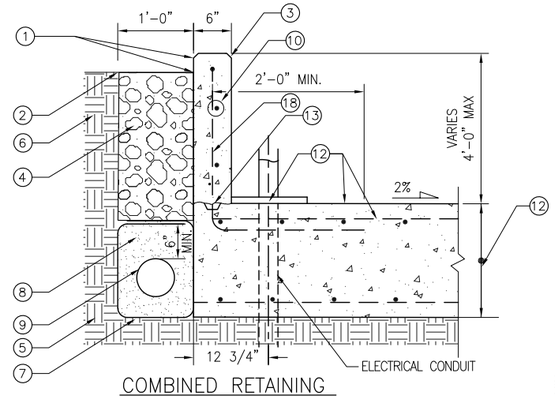

COMBINED RETAINING WALL– 2' SHELTER FOOTING

DETAIL 2
SCALE: NTS

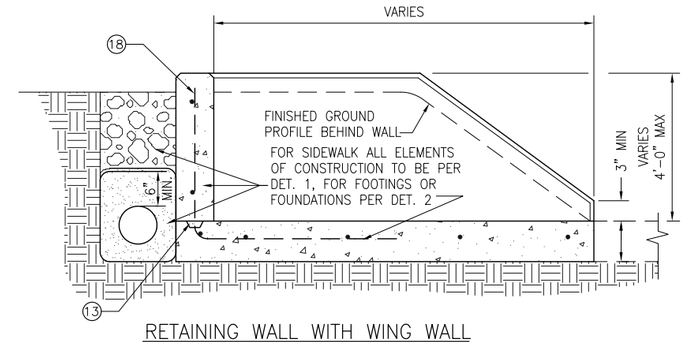

RETAINING WALL WITH WING WALL FOR COMBINATION FOOTINGS, FOUNDATIONS OR SIDEWALKS

DETAIL 3
SCALE: NTS

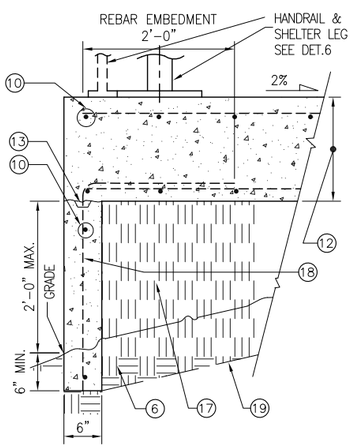

COMBINED FILL WALL– SHELTER FOOTING

DETAIL 4
SCALE: NTS

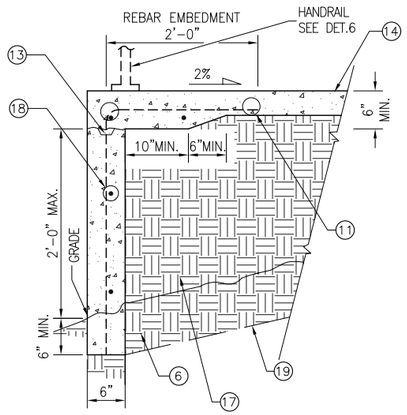

COMBINED FILL WALL–SIDEWALK

DETAIL 5
SCALE: NTS

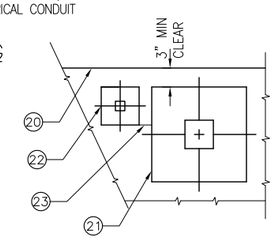

DETAIL 6
SCALE: NTS

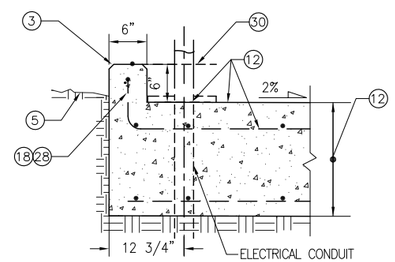

COMBINED 6" CURB AND FOOTING

DETAIL 9
SCALE: NTS

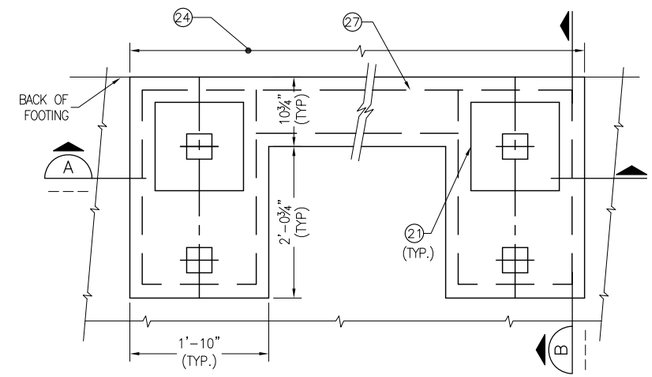

STUB WALL PLAN

DETAIL 7
SCALE: NTS

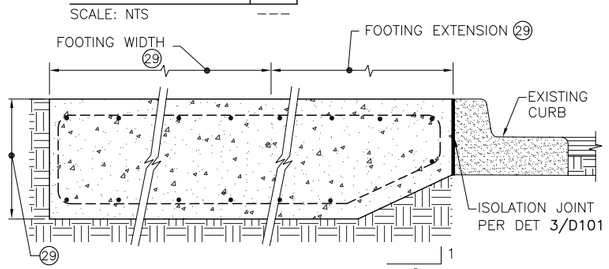

DETAIL 8
SCALE: NTS

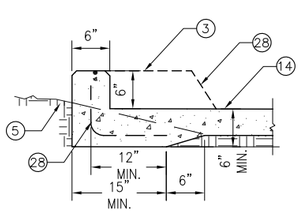

COMBINED 6" CURB AND SIDEWALK

DETAIL 10
SCALE: NTS

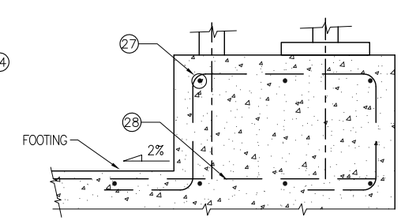

SECTION B
SCALE: NTS

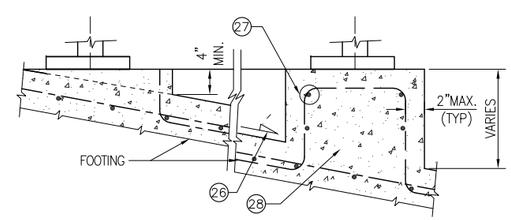

SECTION A
SCALE: NTS

GENERAL NOTES

1. DRAIN PIPE NOT REQUIRED FOR WALLS 3 FEET HIGH OR LESS. SEE SITE PLANS FOR DAYLIGHTING DETAILS.
2. TOP OF WALLS TO MATCH THE LONGITUDINAL SLOPE OF FOOTINGS AND SIDEWALK.
3. JOINT PER DET 3/D101 TO ISOLATE SHELTER FOOTING EDGES FROM PAVEMENT, SIDEWALKS, OR OTHER STRUCTURES.

CONSTRUCTION NOTES

1. TOP OF WALL 3" ABOVE FINISHED GRADE.
2. RESTORE SURFACE TO ORIGINAL OR BETTER CONDITION.
3. 3/4" CHAMFER FOR ALL EXPOSED EDGES.
4. 4" – 6" QUARRY SPALLS
5. UNDISTURBED SOIL
6. UNDISTURBED SOIL OR COMPACTED NATIVE SOIL OR STRUCTURAL FILL IF NEEDED.
7. FILTER FABRIC AND DRAIN PIPE FOR WALLS HIGHER THAN 3'–0"
8. 1" MINUS WASHED ROCK
9. 4" SCH 40 PERFORATED PVC PIPE FOR WALLS HIGHER THAN 3'–0"
10. # 4 @ 12" OC E.W. WITH 2" COVER. SEE 4/D106 FOR REBARS AT WALL CORNERS
11. # 4 @ 12" OC WITH 3" COVER
12. SEE SITE PLAN AND DWG D101 OR D103 FOR SHELTER FOOTING DETAILS. 12 3/4" FROM BACK OF WALL TO CENTERLINE OF ELECTRICAL CONDUIT.
13. IF WALL/FOOTING NOT CONSTRUCTED MONOLITHICALLY, ROUGHEN TOP SURFACE OF SLAB UNDER WALL, CLEAN AND COAT WITH CONCRETE EPOXY BONDING COMPOUND OR PROVIDE A 1" DEEP BY 4" WIDE CONTINUOUS KEYWAY.
14. NEW SIDEWALK OR SIDEWALK EXTENSION PER CITY STANDARD DETAIL BEYOND THE THICKENED EDGE SHOWN.
15. SEE DETAIL 1 FOR SIDEWALK OR 2 FOR SHELTER FOOTING
16. FINISHED GROUND PROFILE BEHIND WING WALL
17. STRUCTURAL FILL COMPACTED TO 90% OF PROCTOR
18. REINFORCEMENT BARS CONTINUOUS BETWEEN WALL OR CURB AND FOOTING OR SIDEWALK. DOWELLING THE WALL OR CURB TO THE FOOTING SHALL NOT BE ACCEPTABLE.
19. TAPER SIDEWALL TO EDGE OF FOOTING OR SIDEWALK EXTENSION.
20. BACK EDGE OF FILL WALL
21. TYPICAL 12" X 12" RAPIDRIDE SHELTER REAR LEG SHOE PLATE (BY OTHERS). PLACE REBARS TO AVOID INTERFERENCE WITH ANCHOR BOLTS. SEE DETAILS ON SHEET D101A & D101B.
22. TYPICAL HANDRAIL POST BASE PLATE. PLACE FOOTING REBARS TO AVOID INTERFERENCE WITH ANCHORS. SEE DET 3/D107 FOR BOLT PATTERN.
23. 2" CLEARANCE AT EITHER SIDE OF SHELTER REAR LEG SHOE PLATE
24. 8'–4 1/2" FOR SHELTERS RR–125 AND RR–126, 14'–0 1/2" FOR LARGE SHELTERS.
25. NOT USED
26. 5% SLOPE OR MORE
27. REINFORCEMENT SAME AS FOOTING, # 5 @ 12" MAX E.W. PLACE AS NECESSARY TO AVOID INTERFERENCE WITH SHOE PLATE ANCHORS. SEE DET 1/D101 FOR BOLT PATTERN.
28. IF THE WALL OR CURB IS NOT CONSTRUCTED MONOLITHICALLY, CONSTRUCT THE FOOTING OR SIDEWALK SLAB WITH THE REINFORCEMENT BARS FOR THE WALL OR CURB IN PLACE, THEN ROUGHEN THE FOOTING OR SIDEWALK SURFACE AND CLEAN AND COAT WITH CONCRETE EPOXY BONDING AGENT PRIOR TO PLACING THE WALL OR CURB. DOWELLING THE WALL OR CURB TO THE FOOTING OR SIDEWALK SHALL NOT BE ACCEPTABLE.
29. DIMENSIONS VARY. SEE ZONE PLAN FOR FOOTING TYPE AND EXTENSION LENGTH AND DWG D101 OR D103 FOR OTHER FOOTING DETAILS.

KCMT 2020-2021 STANDARD DETAILS

No.	REVISION	BY	APP'D	DATE

811 Know what's below. Call before you dig.

DESIGNED: K. CHANG YUEN	APPROVED: D. CRIPPEN
DRAWN: G. CAREY	
CHECKED: K. CHANG YUEN	PROJECT NO: -
CHECKED: C. ASQUITH	CONTRACT NO: -

King County METRO

METRO TRANSIT CAPITAL DIVISION
TRANSIT PASSENGER FACILIITES - IMPROVEMENTS

SECTIONS AND DETAILS

DATE: 4/2020
DRAWING NO: D104
SHEET NO: OF 10 20

\\DOT.kingcounty.lcl\Transit\DOCAD_Folder\Projects\Passenger Facilities\Standard Details\Passenger Facilities Standard Details\2020-2021 STANDARD DETAILS\D104.dwg | Layout: D104
PLOTTED: Apr 21, 2020-12:04:34pm By: GCarey
XREFS: KCMTD-BORDER.dwg
IMAGES: