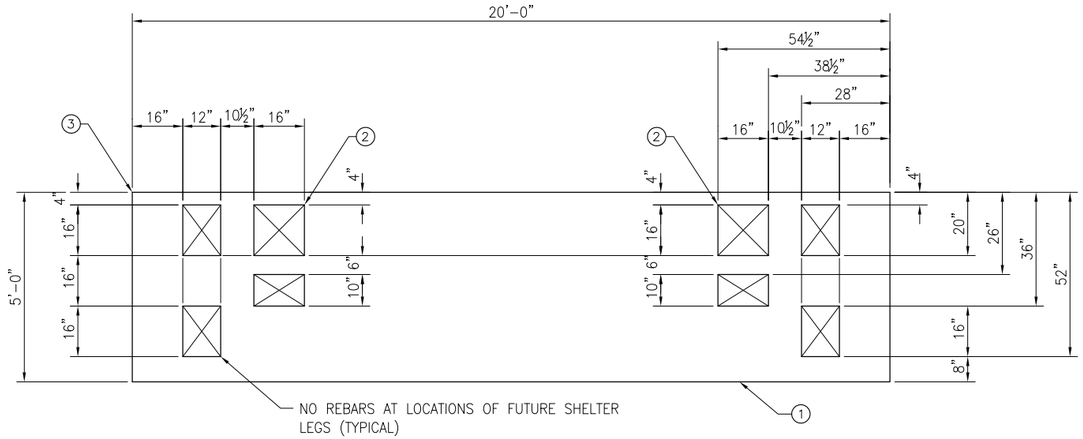

RAPIDRIDE RR-20 SHELTER FOOTING (FOR RR206/RR208/RR208B/F22)
REBAR BLOCKOUTS FOR SHELTER ANCHOR BOLTS

DETAIL 1
SCALE: NONE

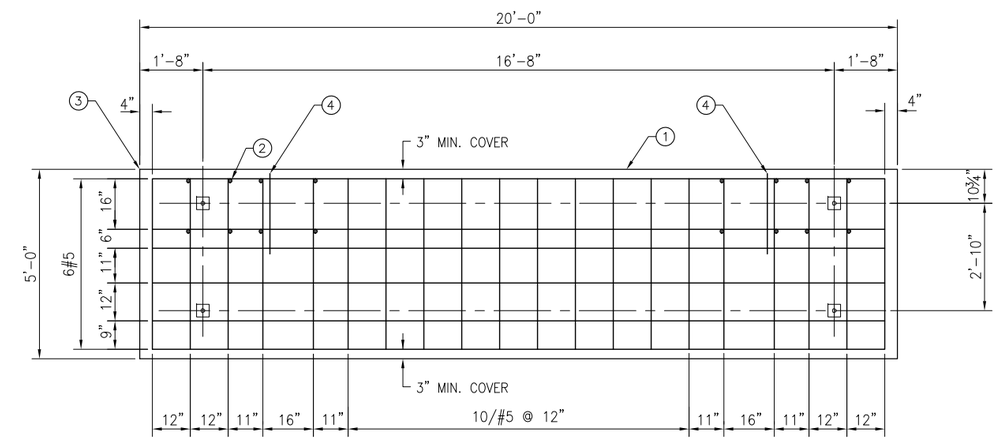

RAPIDRIDE RR-20 SHELTER FOOTING (FOR F-22)

DETAIL 2
SCALE: NONE

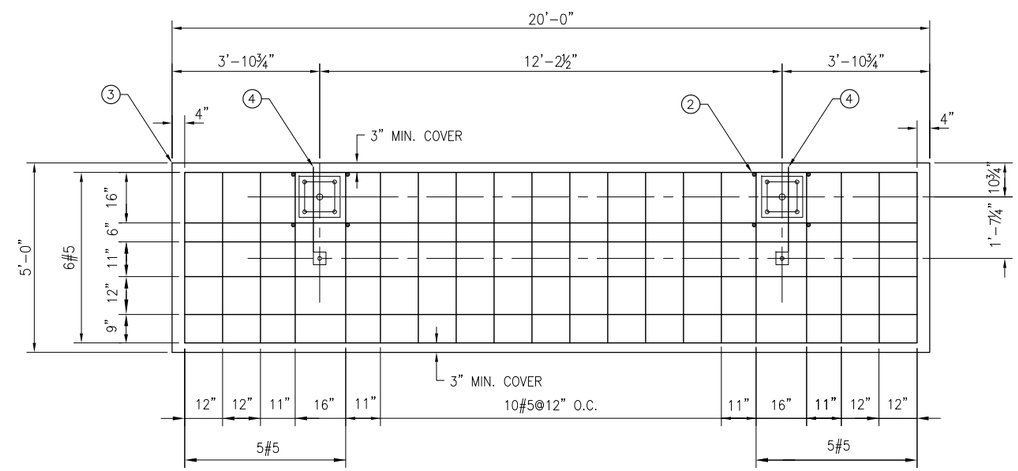

RAPIDRIDE RR-20 SHELTER FOOTING (FOR RR206/RR208/RR208B)

DETAIL 3
SCALE: NONE

CONSTRUCTION NOTES

1. JOINT PER DET 3/D101 TO ISOLATE EDGES FROM PAVEMENT, SIDEWALKS, OR OTHER STRUCTURES.
2. #4 VERTICAL EPOXY-COATED BARS 6" EMBEDMENT INTO SOIL FOR RESTRAINT (TYP).
3. POINT OF REFERENCE, (SEE NOTE 1/D101).
4. 20" LONG #5 REBAR @ 6" OFFSET FROM THE ADJACENT REBAR. BOTH TOP & BOTTOM LAYERS.

KCMT 2020-2021 STANDARD DETAILS

No.	REVISION	BY	APP'D	DATE
△				
△				
△				
△				

811 Know what's below. Call before you dig.

DESIGNED: K. CHANG YUEN	APPROVED: D. CRIPPEN
DRAWN: G. CAREY	
CHECKED: K. CHANG YUEN	PROJECT NO: -
CHECKED: C. ASQUITH	CONTRACT NO: -

King County METRO

METRO TRANSIT CAPITAL DIVISION
TRANSIT PASSENGER FACILIITES - IMPROVEMENTS

RAPIDRIDE SHELTER FOOTING
REBAR LAYOUT DETAILS

DATE: 4/2020
DRAWING NO: D101B
SHEET NO: 6 OF 20

\\DOT.kingcounty.lcl\Transit\DC\CAD_Folders\Projects\Passenger Facilities\Standard Details\Passenger Facilities Standard Details\2020-2021 STANDARD DETAILS\D101B.dwg | Layout: D101B
PLOTTED: Apr 21, 2020-11:49:38am By GCarey
XREFS: KCMTD-BORDER.dwg
IMAGES: