KING COUNTY, WASHINGTON

SURFACE WATER DESIGN MANUAL

DRAFT

King County
Department of Natural Resources

January 24, 2005

King County Executive
Ron Sims

Metropolitan King County Council
Carolyn Edmonds, District 1
Bob Ferguson, District 2
Kathy Lambert, District 3
Larry Phillips, District 4
Dwight Pelz, District 5
Rob McKenna, District 6
Pete von Reichbauer, District 7
Dow Constantine, District 8
Steve Hammond, District 9
Larry Gossett, District 10
Jane Hague, District 11
David Irons, District 12
Julia Patterson, District 13

Department of Development and Environmental Services (DDES)
Stephanie Warden, Director
Harry Reinert, Special Projects Manager

Department of Natural Resources and Parks (DNRP)
Pam Bissonnette, Director
Bob Burns, Deputy Director
Rod Hansen, Deputy Director

Water and Land Resources Division (WLRD)
Daryl Grigsby, Division Director
Mark Isaacson, Assistant Division Director

Primary Contributing Staff (WLRD)
Curt Crawford, P.E., Managing Engineer
Steve Foley, P.E., Senior Engineer
Kate Rhoads, Senior Engineer
Sue Clarke, C.P.E.S.C., Senior Engineer
Jeff Jacobson, P.E., Engineer

Primary Supporting Staff (WLRD)
Mary Lear, P.E., Engineer
Beth Carpenter, Engineer
Imelda Ngonevolalath, Administrative Specialist
Bob Gilland, Technical Information Processing Specialist
Rebecca Marcy, Project Program Manager
Wendy Gable Collins, Graphic Designer & Cartographer
Laurel Preston, Graphic Designer & Cartographer

Other Contributing Staff (Previous Editions)
Kelly Whiting, P.E., Senior Engineer
Louise Kulzer, Former Senior Water Quality Specialist
Jeff Stern, Senior Water Quality Planner
Thor Tyson, Former Geologist
Bruce Johnson, P.E., Former Senior Engineer
Linda Holden, P.E., Former Senior Engineer
Rhett Jackson, P.E., Former Senior Hydrologist
David Hartley, P.E., Former Senior Hydrologist
Randall Parsons, P.E., Senior Engineer
John Koon, Engineer
Dave Hancock, Senior Engineer
Amy Carlson, Former Engineer
Don Althauser, P.E., Managing Engineer
Jennifer Gaus, Former Engineer
Randy Brake, Former Engineer
Zahid Khan, P.E., Senior Engineer
Joe Miles, P.E., Division Director
Jeff O'Neill, P.E., Former Supervising Engineer
Ann Bethel, Former Engineer
Richard Lowe, P.E., Senior Engineer

Consultants (Previous Editions)
Rick Schaefer, P.E., formerly RW Beck & Associates
Malcom Leytham, PhD, P.E., Northwest Hydraulic Consultants
Gary Minton, PhD, P.E.
Carlos Herrera, P.E., Herrera Environmental Consultants
Beth Schmoyer, P.E., formerly Herrera Environmental
Mark Ewbank, P.E., Herrera Environmental Consultants
Mike Giseburt, P.E., R.W. Beck & Associates
Sarah Spear Cooke, Ph.D., Cooke Scientific Services
SvR Design Company

DRAFT

INTRODUCTION

TABLE OF CONTENTS AND OVERVIEW

KING COUNTY, WASHINGTON

SURFACE WATER DESIGN MANUAL

DRAFT

DRAFT

TABLE OF CONTENTS

CHAPTER 1
DRAINAGE REVIEW AND REQUIREMENTS

Section 1.1	**Drainage Review**	**1-7**
Section 1.1.1	Projects Requiring Drainage Review	1-9
Section 1.1.2	Drainage Review Types and Requirements	1-10
Section 1.1.3	Drainage Review Required By Other Agencies	1-18
Section 1.1.4	Drainage Design Beyond Minimum Compliance	1-18
Section 1.2	**Core Requirements**	**1-19**
Section 1.2.1	Core Reqmt #1: Discharge at the Natural Location	1-19
Section 1.2.2	Core Reqmt #2: Offsite Analysis	1-21
Section 1.2.3	Core Reqmt #3: Flow Control	1-27
Section 1.2.4	Core Reqmt #4: Conveyance System	1-45
Section 1.2.5	Core Reqmt #5: Erosion and Sediment Control	1-51
Section 1.2.6	Core Reqmt #6: Maintenance and Operations	1-54
Section 1.2.7	Core Reqmt #7: Financial Guarantees and Liability	1-55
Section 1.2.8	Core Reqmt #8: Water Quality	1-57
Section 1.3	**Special Requirements**	**1-69**
Section 1.3.1	Special Reqmt #1: Other Adopted Area-Specific Requirements	1-69
Section 1.3.2	Special Reqmt #2: Flood Hazard Area Delineation	1-71
Section 1.3.3	Special Reqmt #3: Flood Protection Facilities	1-72
Section 1.3.4	Special Reqmt #4: Source Control	1-73
Section 1.3.5	Special Reqmt #5: Oil Control	1-74
Section 1.4	**Adjustment Process**	**1-77**
Section 1.4.1	Adjustment Authority	1-78
Section 1.4.2	Criteria for Granting Adjustments	1-78
Section 1.4.3	Adjustment Application Process	1-79
Section 1.4.4	Adjustment Review Process	1-79
Section 1.4.5	Request for Reconsideration Procedure	1-80

CHAPTER 2
DRAINAGE PLAN SUBMITTAL

Section 2.1	**Plans for Permits and Drainage Review**	**2-3**
Section 2.1.1	Plans Required for Permit Submittal	2-3
Section 2.1.2	Plans Required for Drainage Review	2-3
Section 2.2	**Plans Required with Initial Permit Application**	**2-5**
Section 2.2.1	Subdivision, UPD, and Binding Site Plans	2-5
Section 2.2.2	Short Subdivisions	2-6
Section 2.2.3	Commercial Site Development	2-6
Section 2.2.4	Single family Residential	2-6
Section 2.2.5	Other Permits	2-6
Section 2.3	**Drainage Review Plan Specifications**	**2-7**
Section 2.3.1	Engineering Plan Specifications	2-7
Section 2.3.2	Projects in Targeted Drainage Review	2-32
Section 2.4	**Plans Required After Drainage Review**	**2-33**
Section 2.4.1	Plan Changes After Permit Issuance	2-33
Section 2.4.2	Final Corrected Plan Submittal	2-33
Section 2.4.3	Final Plat, Short Plat, and Binding Site Plan Submittals	2-33

DRAFT

TABLE OF CONTENTS

CHAPTER 3
HYDROLOGIC ANALYSIS & DESIGN

Section 3.1	**Hydrologic Design Standards and Principles**	**3-3**
Section 3.1.1	Hydrologic Impacts and Mitigation	3-3
Section 3.1.2	Flow Control Standards	3-5
Section 3.1.3	Hydrologic Analysis Using Continuous Models	3-6
Section 3.2	**Runoff Computation and Analysis Methods**	**3-9**
Section 3.2.1	Rational Method	3-11
Section 3.2.2	KCRTS/Runoff Files Method	3-19
Section 3.2.3	HSPF Model	3-34
Section 3.2.4	Storage Routing/Water Level Analysis Methods	3-35
Section 3.3	**Hydrologic Design Procedures and Considerations**	**3-39**
Section 3.3.1	General Hydrologic Design Process	3-39
Section 3.3.2	Flow Control Design with KCRTS	3-41
Section 3.3.3	Conveyance System Design with KCRTS	3-44
Section 3.3.4	Safety Factors in Hydrologic Design	3-45
Section 3.3.5	Design Options for Addressing Downstream Problems	3-46
Section 3.3.6	Point of Compliance Analysis	3-49
Section 3.3.7	Onsite Closed Depressions and Ponding Areas	3-52

CHAPTER 4
CONVEYANCE SYSTEM ANALYSIS & DESIGN

Section 4.1	**Route Design and Easement Requirements**	**4-3**
Section 4.1.1	Route Design	4-3
Section 4.1.2	Easement and Setback Requirements	4-3
Section 4.2	**Pipes, Outfalls, and Pumps**	**4-7**
Section 4.2.1	Pipe Systems	4-7
Section 4.2.2	Outfall Systems	4-29
Section 4.2.3	Pump Systems	4-36
Section 4.3	**Culverts and Bridges**	**4-37**
Section 4.3.1	Culverts	4-37
Section 4.3.2	Culverts Providing for Fish Passage/Migration	4-51
Section 4.3.3	Bridges	4-53
Section 4.4	**Open Channels, Floodplains, and Floodways**	**4-55**
Section 4.4.1	Open Channels	4-55
Section 4.4.2	Floodplain/Floodway Analysis	4-71

DRAFT

TABLE OF CONTENTS

CHAPTER 5
FLOW CONTROL DESIGN

Section 5.1	**Low Impact Design**	**5-3**
Section 5.1.1	Site Design Concepts	5-3
Section 5.1.2	Use of Materials	5-4
Section 5.2	**Flow Control BMP Requirements**	**5-5**
Section 5.2.1	Individual Lot BMP Requirements	5-5
Section 5.2.2	Requirements for Use of BMP Credits	5-12
Section 5.3	**Detention Facilities**	**5-17**
Section 5.3.1	Detention Ponds	5-17
Section 5.3.2	Detention Tanks	5-31
Section 5.3.3	Detention Vaults	5-35
Section 5.3.4	Control Structures	5-38
Section 5.3.5	Parking Lot Detention	5-49
Section 5.3.6	Roof Detention	5-49
Section 5.3.7	Simple Detention Pond for Cleared Areas	5-50
Section 5.4	**Infiltration Facilities**	**5-57**
Section 5.4.1	General Requirements for Infiltration Facilities	5-57
Section 5.4.2	Infiltration Ponds	5-65
Section 5.4.3	Infiltration Tanks	5-68
Section 5.4.4	Infiltration Vaults	5-71
Section 5.4.5	Infiltration Trenches	5-73
Section 5.4.6	Small Infiltration Basins	5-75

CHAPTER 6
WATER QUALITY DESIGN

Section 6.1	**Water Quality Menus**	**6-3**
Section 6.1.1	Basic Water Quality Menu	6-4
Section 6.1.2	Enhanced Basic Water Quality Menu	6-6
Section 6.1.3	Sensitive Lake Protection Menu	6-8
Section 6.1.4	Sphagnum Bog Protection Menu	6-12
Section 6.1.5	High-Use Menu	6-13
Section 6.2	**General Requirements for WQ Facilities**	**6-17**
Section 6.2.1	Water Quality Design Flows	6-17
Section 6.2.2	Sequence of Facilities	6-19
Section 6.2.3	Setbacks, Slopes, and Embankments	6-21
Section 6.2.4	Facility Liners	6-23
Section 6.2.5	Flow Splitter Designs	6-29
Section 6.2.6	Flow Spreading Options	6-33
Section 6.3	**Biofiltration Facility Designs**	**6-39**
Section 6.3.1	Basic Biofiltration Swales	6-39
Section 6.3.2	Wet Biofiltration Swales	6-55
Section 6.3.3	Continuous Inflow Biofiltration Swales	6-58
Section 6.3.4	Basic Filter Strips	6-59
Section 6.3.5	Narrow Area Filter Strips	6-66
Section 6.4	**Wetpool Facility Designs**	**6-69**
Section 6.4.1	Wetponds — Basic and Large	6-69
Section 6.4.2	Wetvaults	6-83
Section 6.4.3	Stormwater Wetlands	6-89
Section 6.4.4	Combined Detention and Wetpool Facilities	6-95
Section 6.5	**Media Filtration Facility Designs**	**6-103**
Section 6.5.1	General Requirements	6-103
Section 6.5.2	Sand Filters — Basic and Large	6-104
Section 6.5.3	Sand Filter Vaults	6-124
Section 6.5.4	Linear Sand Filters	6-130
Section 6.5.5	StormFilter®	6-135
Section 6.6	**Oil Control Facility Designs**	**6-139**
Section 6.6.1	Catch Basin Inserts	6-139
Section 6.6.2	Oil/Water Separators	6-145

DRAFT

TABLE OF CONTENTS

DEFINITIONS

APPENDICES

APPENDIX A
Maintenance Requirements for Flow Control, Conveyance, and WQ Facilities

APPENDIX B
Master Drainage Plan Objective, Criteria, Components and Review Process

APPENDIX C (detached)
Small Project Drainage Requirements

APPENDIX D (detached)
Erosion and Sediment Control Standards

REFERENCE

1 KCC 9.04 – Surface Water Runoff Policy

2 Adopted Critical Drainage Areas

3 Other Adopted Area Specific Drainage Requirements
- A RA Zone Clearing Restrictions

4 Other Drainage Related Regulations and Guidelines
- A Grading Code Soil Amendment Standard
- B Clearing & Grading Seasonal Limitations
- C Landscape Management Plan Guidelines
- D Shared Facility Maintenance Responsibility Guidance

5 Wetland Hydrology Protection Guidelines

6 Hydrologic/Hydraulic Design Methods
- A EPA Infiltration Rate Test
- B Pond Geometry Equations

7 Engineering Plan Support
- A King County Standard Map Symbols
- B Standard Plan Notes and Example Construction Sequence

8 Forms and Worksheets
- A Technical Information Report (TIR) Worksheet
- B Offsite Analysis Drainage System Table
- C Water Quality Facility Sizing Worksheets
- D Flow Control and Water Quality Facility Summary Sheet and Sketch
- E CSWPPP Worksheet Forms
- F Adjustment Application Form and Process Guidelines
- G Dedication and Indemnification Clause - Final Recording
- H Bond Quantities Worksheet
- I Maintenance and Defect Agreement
- J Drainage Facility Covenant
- K Drainage Release Covenant
- L Drainage Easement
- M Flow Control BMP Covenant
- N Impervious Surface Limit Covenant
- O Clearing Limit Covenant
- P River Protection Easement

9 Interim Changes to Requirements
- A Blanket Adjustments
- B Administrative Changes

INDEX

DRAFT

INTRODUCTION

OVERVIEW

King County's surface water features -- the rivers, lakes, wetlands, streams, and Puget Sound -- are a significant part of our natural beauty and rich heritage. Spawning salmon, meandering rivers, and clean water are important natural resources which must be managed wisely to protect their values.

This Surface Water Design Manual contains the requirements and standards for designing surface and storm water management systems in King County. As part of the permit approval process for certain types of permits for proposed projects, King County requires the construction of surface water and storm water management systems to mitigate the impacts on natural and existing man-made drainage systems.

This manual regulates proposed projects by a mixture of requirements, performance, and design standards. Requirements are quite specific. Performance and design standards are less specific, directing the design engineer to accomplish a defined goal in a consistent manner considering site constraints, objectives of a project, and technical limitations.

These requirements and standards are enforced by the King County Department of Development and Environmental Services (DDES). DDES is responsible for the drainage review and approval of the engineering plans and for the administration of all other King County codes governing development.

The Water and Land Resources (WLR) Division of the King County Department of Natural Resources is responsible for developing the requirements and standards, which includes publishing, updating and providing the technical support for this manual. The WLR Division also reviews requests for experimental design adjustments and blanket adjustments as described in Chapter 1, Section 1.4.

DRAFT

The chapters of this manual are organized as follows:

Chapter 1 - DRAINAGE REVIEW AND REQUIREMENTS

Describes the basic drainage requirements that implement King County adopted surface water runoff policies and explains how these requirements are applied to proposed projects through the drainage review process.

Chapter 2 - DRAINAGE PLAN SUBMITTAL

Describes the requirements and specifications for submittal of design plans for drainage review, including report and plan formats, and scopes.

Chapter 3 - HYDROLOGIC ANALYSIS AND DESIGN

Presents the acceptable methods of hydrologic analysis used to estimate runoff and design flow control, conveyance, and water quality facilities.

Chapter 4 - CONVEYANCE SYSTEM ANALYSIS AND DESIGN

Presents the acceptable methods, details, and criteria for analysis and design of conveyance systems.

Chapter 5 - FLOW CONTROL DESIGN

Presents the acceptable methods, details, and criteria for analysis and design of flow control facilities.

Chapter 6 - WATER QUALITY DESIGN

Presents the acceptable methods, details, and criteria for analysis and design of water quality facilities.

DEFINITIONS - A comprehensive list of the words, terms, and abbreviations accompanied by their meaning as applied in this manual.

APPENDICES:

APPENDIX A - MAINTENANCE REQUIREMENTS FOR FLOW CONTROL, CONVEYANCE, AND WQ FACILITIES

Contains the thresholds and standards for maintenance of all flow control, conveyance, and water quality facilities required in this manual.

APPENDIX B - MASTER DRAINAGE PLAN OBJECTIVES, CRITERIA AND COMPONENTS AND REVIEW PROCESS

Describes in a general outline, the objectives, criteria, components and review process for Master Drainage Plans prepared for Urban Planned Developments and very large projects.

APPENDIX C - SMALL PROJECT DRAINAGE REQUIREMENTS (Separate Detached Publication)

Describes in a separate booklet available from the WLR Division or DDES, the simplified drainage requirements for smaller projects that qualify for Small Project Drainage Review.

APPENDIX D - EROSION & SEDIMENT CONTROL STANDARDS (Separate Detached Publication)

Describes in a separate booklet available from the WLR Division or DDES, the required measures to be implemented during construction to prevent discharges of sediment-laden runoff from the project site. It also describes effective management practices that may be needed to supplement the required erosion and sedimentation control measures.

REFERENCE - Includes materials that are strictly **for reference only** and have not been adopted by the public rule adopting this manual. The applicant is responsible to insure that the most current materials are used in preparing a permit application.

DRAFT

INDEX

CHAPTER 1

DRAINAGE REVIEW AND REQUIREMENTS

KING COUNTY, WASHINGTON

SURFACE WATER DESIGN MANUAL

DRAFT

Section 1.1	**Drainage Review**	**1-7**
Section 1.1.1	Projects Requiring Drainage Review	1-9
Section 1.1.2	Drainage Review Types and Requirements	1-10
Section 1.1.3	Drainage Review Required By Other Agencies	1-19
Section 1.1.4	Drainage Design Beyond Minimum Compliance	1-19
Section 1.2	**Core Requirements**	**1-21**
Section 1.2.1	Core Reqmt #1: Discharge at the Natural Location	1-21
Section 1.2.2	Core Reqmt #2: Offsite Analysis	1-23
Section 1.2.3	Core Reqmt #3: Flow Control	1-29
Section 1.2.4	Core Reqmt #4: Conveyance System	1-48
Section 1.2.5	Core Reqmt #5: Erosion and Sediment Control	1-54
Section 1.2.6	Core Reqmt #6: Maintenance and Operations	1-58
Section 1.2.7	Core Reqmt #7: Financial Guarantees and Liability	1-59
Section 1.2.8	Core Reqmt #8: Water Quality	1-61
Section 1.3	**Special Requirements**	**1-75**
Section 1.3.1	Special Reqmt #1: Other Adopted Area-Specific Requirements	1-75
Section 1.3.2	Special Reqmt #2: Flood Hazard Area Delineation	1-77
Section 1.3.3	Special Reqmt #3: Flood Protection Facilities	1-78
Section 1.3.4	Special Reqmt #4: Source Control	1-79
Section 1.3.5	Special Reqmt #5: Oil Control	1-80
Section 1.4	**Adjustment Process**	**1-83**
Section 1.4.1	Adjustment Authority	1-84
Section 1.4.2	Criteria for Granting Adjustments	1-84
Section 1.4.3	Adjustment Application Process	1-85
Section 1.4.4	Adjustment Review Process	1-86
Section 1.4.5	Request for Reconsideration Procedure	1-87

DRAFT

CHAPTER 1

DRAINAGE REVIEW AND REQUIREMENTS

This chapter describes the drainage review procedures and types, the drainage requirements, and the adjustment procedures necessary to implement surface water runoff policies codified in Chapter 9.04 of the King County Code (KCC). It also provides direction for implementing the more detailed procedures and design criteria found in subsequent chapters of this manual.

Chapter Organization

The information presented in Chapter 1 is organized into four main sections as follows:

- Section 1.1, "Drainage Review" (p. 1-7)
- Section 1.2, "Core Requirements" (p. 1-21)
- Section 1.3, "Special Requirements" (p. 1-75)
- Section 1.4, "Adjustment Process" (p. 1-83).

Each of these sections begins on an odd page so the user can insert tabs if desired for quicker reference.

DRAFT

Formatting of Chapter Text

The text of Chapter 1 and subsequent chapters has been formatted using the following conventions to aid the user in finding, understanding, and properly applying the thresholds, requirements, and procedures contained in this manual:

- **Italic** is used to highlight the following: (a) terms when they are first introduced and defined within the same paragraph; (b) special notes that supplement or clarify thresholds, requirements, and procedures; (c) sentences considered important for purposes of understanding thresholds, requirements, and procedures; and (d) titles of publications.
- **Bold italic** is used to highlight terms considered key to understanding and applying drainage review thresholds, requirements, and procedures. These are called "key terms" and are defined below. This convention applies after the key term is defined and does not necessarily apply to tables and figures.
- **Bold** is used to highlight words and phrases that are not key terms but are considered important to emphasize for purposes of finding and properly applying thresholds, requirements, and procedures.

Key Terms and Definitions

Proper application of the drainage review and requirements in this chapter requires an understanding of the following key terms and their definitions. Other key terms may be defined in subsequent chapters. All such key terms are highlighted in **bold italic** throughout the manual. Other important terms that are not key terms are defined in the text when they are first introduced. These are highlighted in italic when

they are first introduced but are not highlighted throughout the manual. All terms defined in this chapter are also found in the "Definitions" section of this manual as are other important terms defined throughout the Manual.

Agricultural project means any project located on, and proposing improvements consistent with, the permitted uses of land zoned for Agriculture (A zoned lands) as defined in KCC 21A.08.

Construct or modify means to install a new drainage pipe/ditch or make improvements to an existing drainage pipe or ditch, for purposes other than *maintenance*,[1] that either serves to concentrate previously unconcentrated surface and storm water runoff or serves to increase, decrease, or redirect the conveyance of surface and storm water runoff. Construct or modify does not include installation or maintenance of a driveway culvert installed as part of a single family residential building permit.

Civil engineer means a person licensed by the State of Washington as a professional engineer in civil engineering.

Conveyance system nuisance problem means a flooding or erosion problem that does not constitute a ***severe flooding problem*** or ***severe erosion problem*** and that results from the overflow of a constructed conveyance system for runoff events less than or equal to a 10-year event. Examples include inundation of a shoulder or lane of a roadway, overflows collecting in yards or pastures, shallow flows across driveways, minor flooding of crawl spaces or unheated garages/outbuildings, and minor erosion.

Critical aquifer recharge area is the critical area designation, defined and regulated in KCC 21A, that is applied to areas where extra protection of groundwater quantity and quality is needed because of known susceptibility to contamination and importance to drinking water supply. Such areas are delineated on the *King County Critical Aquifer Recharge Area Map* available at DDES or on the County's Geographic Information System (GIS). See the "Definitions" section for more details.

Critical Drainage Area means an area where the Department of Natural Resources and Parks (DNRP) has determined that additional drainage controls (beyond those in this manual) are needed to address a severe flooding, drainage, and/or erosion condition that poses an imminent likelihood of harm to the welfare and safety of the surrounding community. Critical Drainage Areas (CDAs) are formally adopted by administrative rule under the procedures specified in KCC 2.98. When CDAs are adopted, they are inserted in Reference Section 2 of this manual and their requirements are implemented through Special Requirement #1, Section 1.3.1.

Erosion hazard area is the critical area designation, defined and regulated in KCC 21A, that is applied to areas underlain by soils that are subject to severe erosion when disturbed. See the "Definitions" section for more details.

Existing site conditions means those that existed prior to May 1979 (when King County first required flow control facilities) as determined from aerial photographs and, if necessary, knowledge of individuals familiar with the area, unless a drainage plan for land cover changes has been approved by the County since May 1979 as part of a *development*[2] permit or approval. If so, existing site

DRAFT

[1] *Maintenance* means those usual activities taken to prevent a decline, lapse, or cessation in the use of currently serviceable structures, facilities, equipment, or systems if there is no expansion of the structure, facilities, equipment, or system and there are no significant hydrologic impacts. Maintenance includes the repair or replacement of non-functional facilities and the replacement of existing structures with different types of structures, if the repair or replacement is required to meet current engineering standards or is required by one or more environmental permits and the functioning characteristics of the original facility or structure are not changed. For the purposes of applying this definition to the thresholds and requirements of this manual, DDES will determine whether the functioning characteristics of the original facility or structure will remain sufficiently unchanged to consider replacement as maintenance.

[2] *Development* means any activity that requires a permit or approval, including, but not limited to, a building permit, grading permit, shoreline substantial development permit, conditional use permit, special use permit, zoning variance or reclassification, subdivision, short subdivision, urban planned development, binding site plan, site development permit, or right-of-way use permit. "Development" does not include a Class I, II, III, or IV-S forest practice conducted in accordance with Chapter 76.09 RCW and Title 222 WAC or a class IV-G nonconversion forest practice, as defined in KCC 21A.06, conducted in accordance with Chapter 76.09 RCW and Title 222 WAC and a county approved forest management plan.

conditions are those created by the ***site*** improvements and drainage facilities constructed per the approved drainage plan.

Flood hazard area is the critical area designation, defined and regulated in KCC 21A, that is applied to areas subject to inundation by a 100-year flood event or areas at risk from channel migration. Flood hazard areas generally include, but are not limited to, aquatic areas (e.g., streams or lakes), wetlands, or closed depressions. See the "Definitions" section for more details.

Fully dispersed means the runoff from an impervious surface or non-native pervious surface has dispersed per the criteria for fully dispersed surface in Section 1.2.3.2.C (p. 1-43).

Groundwater protection areas include ***critical aquifer recharge areas*** as defined in KCC 21A, sole source aquifer areas as designated by the federal Environmental Protection Agency, and wellhead protection areas as mapped by the Washington State Department of Health.

High-use site means a commercial or industrial site that (1) has an expected average daily traffic (ADT) count equal to or greater than 100 vehicles per 1,000 square feet of gross building area; (2) is subject to petroleum storage or transfer in excess of 1,500 gallons per year, not including delivered heating oil; or (3) is subject to use, storage, or maintenance of a fleet of 25 or more diesel vehicles that are over 10 tons net weight (trucks, buses, trains, heavy equipment, etc.). Also included is any road intersection with a measured ADT count of 25,000 vehicles or more on the main roadway and 15,000 vehicles or more on any intersecting roadway, excluding projects proposing primarily pedestrian or bicycle use improvements. For the purposes of this definition, *commercial and industrial site* means that portion of a ***site's*** developed area associated with an individual commercial or industrial business (e.g., the area occupied by the business's buildings and required parking).

Historic site conditions means those that existed on the ***site*** prior to any development in the Puget Sound region. For lands not currently submerged (i.e., outside the ordinary high water mark of a lake, wetland, or stream), historic site conditions shall be assumed to be forest cover unless reasonable, historic, ***site-***specific information is provided to demonstrate a different vegetation cover. In some stream basins, as allowed per Section 1.2.3.1.B, historic site conditions for lands not currently submerged may be assumed to be 75% forest, 15% grass, and 10% impervious surface.

Land disturbing activity means any activity that results in a change in the existing soil cover, both vegetative and non-vegetative, or the existing soil topography. Land disturbing activities include, but are not limited to demolition, construction, clearing, grading, filling, excavation, and compaction. Land disturbing activity does not include tilling conducted as part of agricultural practices, landscape maintenance, or gardening.

Landslide hazard area is the critical area designation, defined and regulated in KCC 21A, that is applied to areas subject to severe risk of landslide due to topography, soil conditions, and geology. See the "Definitions" section for more details.

Landslide hazard drainage area means an area mapped by the County where it has been determined that overland flows from a project will pose a significant threat to health and safety because of its close proximity to a ***landslide hazard area*** that is on a slope steeper than 15%. Such areas are delineated on the Landslide Hazard Drainage Areas map adopted with this manual (see map pocket on inside of back cover).

Major receiving water means a large receiving water that has been determined by King County to be safe for the direct discharge of increased runoff from a proposed project without a flow control facility, subject to the restrictions on such discharges set forth in Core Requirement #3, Section 1.2.3. A list of major receiving waters is provided in Section 1.2.3.1 (p. 1-32). Major receiving waters are also considered safe for application of Basic WQ treatment in place of otherwise required Enhanced Basic WQ treatment (see Section 1.2.8.1).

Native vegetated surface means a surface in which the soil conditions, ground cover, and species of vegetation are like those of the original native condition for the ***site***. More specifically, this means (1) the soil is either undisturbed or has been treated according to the "native vegetated landscape"

DRAFT

specifications in Appendix C, Section C.2.1.8; (2) the ground is either naturally covered with vegetation litter or has been top-dressed with 4 inches of hog fuel consistent with the native vegetated landscape specifications in Appendix C; and (3) the vegetation is either (a) comprised predominantly of plant species, other than noxious weeds, that are indigenous to the coastal region of the Pacific Northwest and that reasonably could have been expected to occur naturally on the ***site*** or (b) comprised of plant species specified for a native vegetated landscape in Appendix C. Examples of these plant species include trees such as Douglas fir, western hemlock, western red cedar, alder, big-leaf maple and vine maple; shrubs such as willow, elderberry, salmonberry and salal; and herbaceous plants such as sword fern, foam flower, and fireweed.

Natural discharge area means an onsite area tributary to a single ***natural discharge location***.

Natural discharge location means the location where surface and storm water runoff leaves (or would leave if not infiltrated or retained) the ***site*** or ***project site*** under ***existing site conditions***.

New impervious surface means the addition of a hard or compacted surface like roofs, pavement, gravel, or dirt; or the addition of a more compacted surface, like paving over pre-existing dirt or gravel.

New pervious surface means the conversion of a ***native vegetated surface*** or other native surface to a non-native pervious surface (e.g., conversion of forest or meadow to pasture land, grass land, cultivated land, lawn, landscaping, bare soil, etc.), or any alteration of existing non-native pervious surface that significantly increases surface and storm water runoff (e.g., conversion of pasture land, grass land, or cultivated land to lawn, landscaping, or bare soil; or alteration of soil characteristics).

New PGIS means ***new impervious surface*** that is ***pollution-generating impervious surface***.

New PGPS means ***new pervious surface*** that is ***pollution-generating pervious surface***.

***Pollution-generating impervious surface* (*PGIS*)** means an impervious surface considered to be a significant source of pollutants in stormwater runoff. Such surfaces include those that are *subject to vehicular use*[3] or storage of *erodible or leachable materials, wastes, or chemicals*,[4] and that receive direct rainfall or the run-on or blow-in of rainfall.[5] Metal roofs are also considered to be PGIS unless they are treated to prevent leaching.

Pollution-generating pervious surface* (*PGPS*)** means a non-impervious surface considered to be a significant source of pollutants in surface and storm water runoff. Such surfaces include those subject to use of pesticides and fertilizers, loss of soil, or the use or storage of erodible or leachable materials, wastes, or chemicals. Such surfaces include, but are not limited to, the lawn and landscaped areas of residential or commercial ***sites, golf courses, parks, sports fields, and County-standard grassed modular grid pavement.

Project site means that portion of a ***site*** and any offsite areas subject to proposed project activities, alterations, and improvements including those required by this manual.

DRAFT

[3] *Subject to vehicular use* means the surface, whether paved or not, is regularly used by motor vehicles. The following surfaces are considered regularly used by motor vehicles: roads, unvegetated road shoulders, bike lanes within or not separated from the traveled lane of a roadway, driveways, parking lots, unfenced firelanes, diesel equipment storage yards, and airport runways. The following surfaces are not considered regularly used by motor vehicles: road shoulders primarily used for emergency parking, paved bicycle pathways, bicycle lanes adjacent to unpaved or paved road shoulders primarily used for emergency parking, fenced firelanes, and infrequently used maintenance access roads.

[4] *Erodible or leachable materials, wastes, or chemicals* are those substances that, when exposed to rainfall, measurably alter the physical or chemical characteristics of the rainfall runoff (examples include erodible soil, uncovered process wastes, manure, fertilizers, oily substances, ashes, kiln dust, garbage dumpster leakage, etc.).

[5] A covered parking area would be considered pollution-generating if runoff from uphill could regularly run through it, or if rainfall could regularly blow in and wet the pavement surface. The same parking area would not be included if it were enclosed by walls or if a low wall and berm prevented stormwater from being blown in or from running onto the covered area.

Redevelopment project means a project that proposes to add, replace, or modify impervious surfaces for purposes other than a residential subdivision or maintenance on a ***site*** that is already substantially developed in a manner consistent with its current zoning or with a legal non-conforming use, or has an existing impervious surface coverage of 35% or more. The following examples illustrate the application of this definition.

A Redevelopment Project that Adds New Impervious Surface

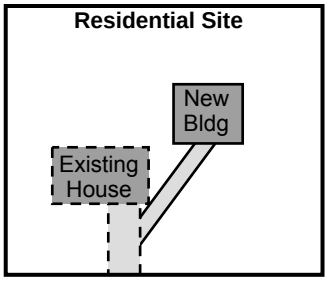

A Redevelopment Project that Replaces Impervious Surface

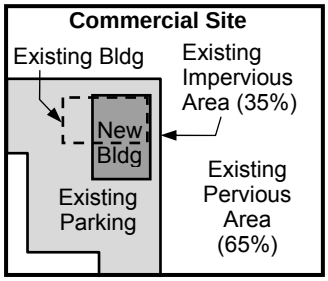

A Redev Project that Adds and Replaces Impervious Surface

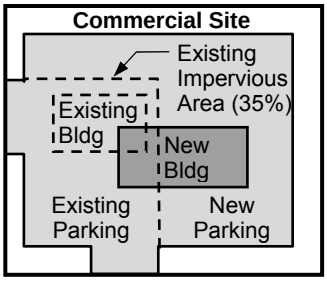

Replaced impervious surface means any existing impervious surface on the ***project site*** that is proposed to be removed and re-established as impervious surface, excluding impervious surface removed for the sole purpose of installing utilities or performing maintenance. For the purposes of this definition, *removed* means the removal of buildings down to bare soil or the removal of Portland cement concrete (PCC) slabs and pavement or asphaltic concrete (AC) pavement ~~together with any asphalt treated base (ATB)~~. It does not include the removal of pavement material through grinding or other surface modification unless the entire layer of PCC or AC ~~together with ATB~~ is removed.

Replaced PGIS means ***replaced impervious surface*** that is ***pollution-generating impervious surface***.

Severe building flooding problem means there is flooding of the *finished floor area*[6] of a *habitable building*,[7] or the electrical/heating system of a habitable building for runoff events less than or equal to a 100-year event. Examples include flooding of finished floors of homes and commercial or industrial buildings, or flooding of electrical/heating system components in the crawl space or garage of a home.

Severe erosion problem means there is an open drainage feature with evidence of or potential for erosion/incision sufficient to pose a sedimentation hazard to downstream conveyance systems or pose a landslide hazard by undercutting adjacent slopes. Severe erosion problems do not include roadway shoulder rilling or minor ditch erosion.

Severe flooding problem means a ***severe building flooding problem*** or a ***severe roadway flooding problem***.

Severe roadway flooding problem means there is flooding over all lanes of a *roadway*,[8] or a *sole access driveway*[9] is severely impacted, for runoff events less than or equal to the 100-year event. A severely impacted sole access driveway is one in which flooding overtops a culverted section of the driveway, posing a threat of washout or unsafe access conditions due to indiscernible driveway edges, or flooding is deeper than 6 inches on the driveway, posing a severe impediment to emergency access.

Single family residential project means any project that (a) constructs or modifies a single family dwelling unit, (b) makes improvements (e.g., driveways, roads, outbuildings, play courts, etc.) or

DRAFT

[6] *Finished floor area*, for the purposes of defining ***severe building flooding problem***, means any enclosed area of a building that is designed to be served by the building's permanent heating or cooling system.

[7] *Habitable building* means any residential, commercial, or industrial building that is equipped with a permanent heating or cooling system and an electrical system.

[8] *Roadway*, for the purposes of this definition, means the traveled portion of any public or private road or street classified as such in the *King County Road Standards*.

[9] *Sole access driveway* means there is no other unobstructed, flood-free route for emergency access to a habitable building.

clears native vegetation on a lot that contains or will contain a single family dwelling unit, or (c) is a plat, short plat, or boundary line adjustment that creates or adjusts lots that will contain single family dwelling units.

Site (a.k.a. ***development site***) means a single parcel, or two or more contiguous parcels that are under common ownership or documented legal control, used as a single parcel for purposes of applying for authority from King County to carry out a development/project proposal. For projects located primarily within dedicated rights-of-way, ***site*** includes the entire width of right-of-way within the total length of right-of-way subject to improvements proposed by the project.

Steep slope hazard area is the critical area designation, defined and regulated in KCC 21A, that is applied to areas on a slope of 40% or more within a vertical elevation change of at least 10 feet. See the "Definitions" section for more details.

Threshold discharge area means an onsite area draining to a single ***natural discharge location***, or multiple ***natural discharge locations*** that combine within one-quarter-mile downstream (as determined by the shortest flowpath). The examples below illustrate this definition. This term is used to clarify how the thresholds, exemptions, and exceptions of this manual are applied to ***sites*** with multiple discharge locations.

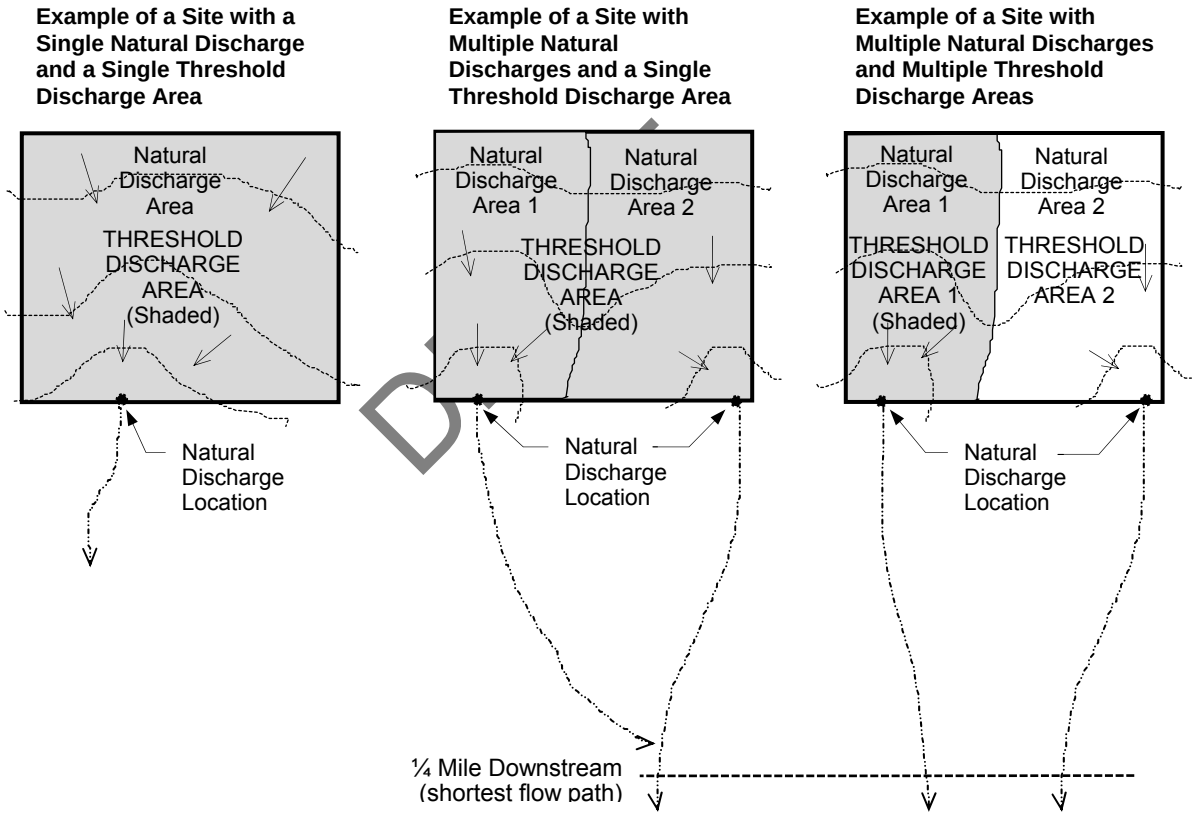

Transportation redevelopment project means a stand-alone transportation improvement project that proposes to add, replace, or modify impervious surface, for purposes other than maintenance, within a length of dedicated public or private road right-of-way that has an existing impervious surface coverage of thirty-five percent or more. Road right-of-way improvements required as part of a subdivision or commercial development project may not be defined as a separate transportation redevelopment project.

1.1 DRAINAGE REVIEW

Drainage review is the evaluation by King County staff of a proposed project's compliance with the drainage requirements of this manual. The King County department responsible for drainage review is the Department of Development and Environmental Services (DDES) unless otherwise specified in KCC 9.04. Drainage review by DDES is an integral part of its permit review process for development projects. This section describes when and what type of drainage review is required for a proposed project and how to determine which drainage requirements apply.

The section covers the following topics related to drainage review:

- "Projects Requiring Drainage Review," Section 1.1.1 (p. 1-9)
- "Drainage Review Types and Requirements," Section 1.1.2 (p. 1-10)
- "Drainage Review Required By Other Agencies," Section 1.1.3 (p. 1-19)
- "Drainage Design Beyond Minimum Compliance," Section 1.1.4 (p. 1-19)

Guide to Using Section 1.1

The following steps are recommended for efficient use of Section 1.1:

1. Determine whether your proposed project is subject to the requirements of this manual by seeing if it meets any of the **thresholds for drainage review** specified in Section 1.1.1 (p. 1-9). Making this determination requires an understanding of the key terms defined at the beginning of this chapter.
2. If drainage review is required per Section 1.1.1, use the flow chart in Figure 1.1.2.A (p. 1-11) to determine what **type of drainage review** will be conducted by DDES. The type of drainage review defines the scope of drainage requirements that will apply to your project as summarized in Table 1.1.2.A (p. 1-12).
3. Check the more detailed threshold information in Section 1.1.2 (beginning on page 1-10) to verify that you have determined the correct type of drainage review.
4. After verifying the type of drainage review, use the information in Section 1.1.2 to determine which **core requirements** (found in Section 1.2) and which **special requirements** (found in Section 1.3) must be evaluated for compliance by your project. To determine how to comply with each applicable core and special requirement, see the more detailed information on these requirements contained in Sections 1.2 and 1.3 of this chapter.

Note: For Steps 2 through 4, it is recommended that you arrange a predesign meeting with DDES permit review staff to confirm the type of drainage review and scope of drainage requirements that apply to your proposed project.

DRAFT

1.1.1 PROJECTS REQUIRING DRAINAGE REVIEW

Drainage review is required for any proposed project (except those proposing only **maintenance**) that is subject to a King County **development** permit or approval, including but not limited to those listed at right, AND that meets any one of the following conditions:

1. The project adds or will result in 2,000 square feet[10] or more of ***new impervious surface***, ***replaced impervious surface***, or ***new*** plus ***replaced impervious surface***, OR
2. The project proposes 7,000 square feet[10] or more of ***land disturbing activity***, OR
3. The project proposes to ***construct or modify*** a drainage pipe/ditch that is 12 inches or more in size/depth, or receives surface and storm water runoff from a drainage pipe/ditch that is 12 inches or more in size/depth, OR
4. The project contains or is adjacent to a ***flood hazard area*** as defined in KCC 21A.06, OR
5. The project is located within a ***Critical Drainage Area***,[11] OR
6. The project is a ***redevelopment project*** proposing $100,000[12] or more of improvements to an existing ***high-use site***, OR
7. The project is a ***redevelopment project*** on a single- or multiple-parcel ***site*** in which the total of ***new*** **plus** ***replaced impervious surface*** is 5,000 square feet or more and whose valuation of proposed improvements (including interior improvements and excluding required mitigation and frontage improvements) exceeds 50% of the **assessed value** of the existing ***site*** improvements.

If drainage review is required for the proposed project, the type of drainage review must be determined based on project and site characteristics as described in Section 1.1.2. The type of drainage review defines the scope of drainage requirements that must be evaluated for compliance with this manual.

King County Permits and Approvals
Administrative Subdivision (Short Plat)
Binding Site Plan
Boundary Line Adjustment
Conditional Use*
Clearing
Commercial Building
Experimental Design Adjustment*
Formal Subdivision (plat)
Franchise Utility Right-of-Way Use
Grading
Preapplication Adjustment*
Right-of-Way Use
Shoreline Substantial Development*
Single Family Residential Building
Special Use*
Unclassified Use*
Urban Planned Development
Zoning Reclassification*
Zoning Variance*

*****Note: If the proposed project will require subsequent permits subject to drainage review, then DDES may allow the drainage review to be deferred until application for the later permits.*

DRAFT

[10] The thresholds for ***new impervious surface***, ***replaced impervious surface***, and ***land disturbing activity*** shall be applied by ~~***threshold discharge area***~~***project site*** and in accordance with the definitions of these surfaces and activities.

[11] See Reference Section 3 for a list of ***Critical Drainage Areas***.

[12] This is the "project valuation" as declared on the permit application submitted to DDES. The dollar amount of this threshold is considered to be as of January 8, 2001 and may be adjusted on an annual basis using the local consumer price index (CPI). *Note: January 8, 2001 is the effective date of the ESA 4(d) Rule for Puget Sound Chinook salmon.*

1.1.2 DRAINAGE REVIEW TYPES AND REQUIREMENTS

For most projects ~~adding~~ resulting in 2,000 square feet or more of ***new*** and/or ***replaced*** ***impervious surface***, the full range of core and special requirements contained in Sections 1.2 and 1.3 must be evaluated for compliance through the drainage review process. However, for some types of projects, the scope of requirements applied is narrowed to allow more efficient, customized review. Each of the following four drainage review types tailors the review process and application of drainage requirements to a project's size, location, type of development, and anticipated impacts to the local and regional surface water system:

- Small Project Drainage Review, Section 1.1.2.1 (p. 1-13)
- Targeted Drainage Review, Section 1.1.2.2 (p. 1-14)
- Full Drainage Review, Section 1.1.2.3 (p. 1-17)
- Large Project Drainage Review, Section 1.1.2.4 (p. 1-18).

Each project requires only one of the above drainage review types, with the single exception that a project that qualifies for Small Project Drainage Review may also require Targeted Drainage Review. Figure 1.1.2.A (next page) can be used to determine which drainage review type is required. However, this may entail consulting the more detailed thresholds for each review type specified in the above-referenced sections.

Table 1.1.2.A (p. 1-12) can be used to quickly identify which requirements are applied in each type of drainage review. The applicant must evaluate the requirements "checked" for a particular drainage review type to determine what is necessary for compliance.

DRAFT

Note to reviewers of proposed changes: This chart has been modified based on the changes shown to the threshold text in Sections 1.1.2.1, 1.1.2.2, and 1.1.2.3

FIGURE 1.1.2.A FLOW CHART FOR DETERMINING TYPE OF DRAINAGE REVIEW REQUIRED

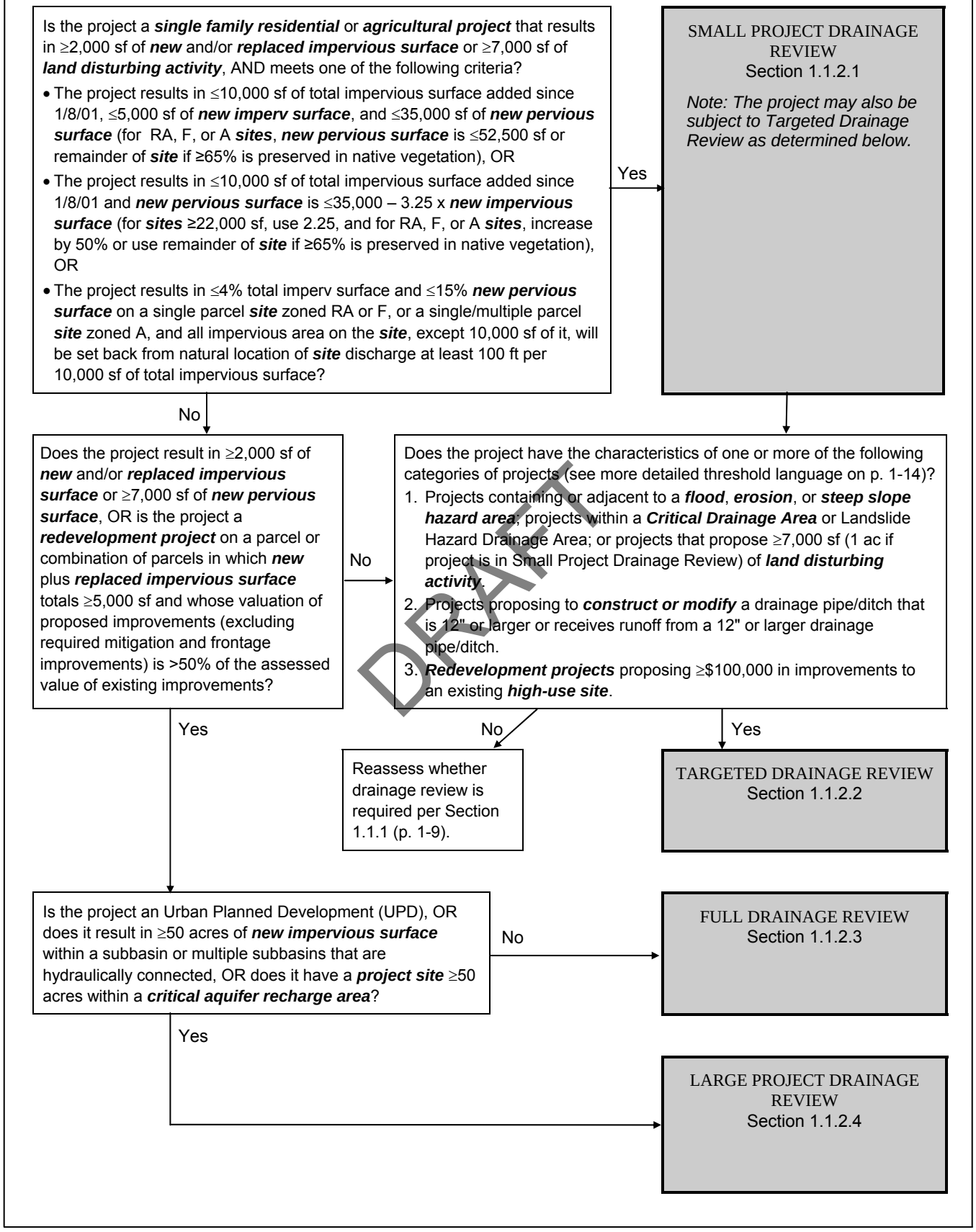

Note to reviewers of proposed changes: This table has been modified based on the changes shown to the threshold text in Sections 1.1.2.1, 1.1.2.2, and 1.1.2.3

TABLE 1.1.2.A REQUIREMENTS APPLIED UNDER EACH DRAINAGE REVIEW TYPE

	Small Project Drainage Review	Targeted Drainage Review			Full Drainage Review	Large Project Drainage Review
	Single family residential projects and ***agricultural projects*** that result in ≥2,000 sf of ***new*** and/or ***replaced impervious surface*** or ≥7,000 sf of ***land disturbing activity*** but do not exceed the total impervious surface and ***new pervious surface*** thresholds specified in Sec. 1.1.2.1 (p. 1-13).	Projects that are not subject to Full or Large Project Drainage Review, AND have characteristics of **one or more** of the following categories of projects: 1. Projects containing or adjacent to a ***flood***, ***erosion***, or ***steep slope hazard area***; projects within a ***Critical Drainage Area*** or Landslide Hazard Drainage Area; or projects proposing ≥7,000 sf of ***land disturbing activity*** (1 ac if in Small Project Drainage Review). 2. Projects that ***construct or modify*** a drainage pipe/ditch that is 12" or larger or receive runoff from a 12" or larger drainage pipe/ditch. 3. ***Redevelopment projects*** with ≥$100,000 in improvements to a ***high-use site***(1)			All projects that result in ≥2,000 sf of ***new*** and/or ***replaced impervious surface*** or ≥7,000 sf of ***land disturbing activity*** but are not subject to Small Project Drainage Review, OR ***redevelopment projects*** meeting drainage review threshold #7 in Section 1.1.1 (p. 1-9).	UPDs, OR projects that result in ≥50 acres of ***new impervious*** within a sub-basin or multiple subbasins that are hydraulically connected, OR ***project sites*** ≥50 acres within a ***critical aquifer recharge area***.
		Category 1	**Category 2**	**Category 3**		
SMALL PROJECT DRAINAGE REQUIREMENTS	✓					
CORE REQUIREMENT #1 Discharge at Natural Location		*(2)	✓		✓	✓
CORE REQUIREMENT #2 Offsite Analysis		*(2)	✓(3)		✓(3)	✓(3)
CORE REQUIREMENT #3 Flow Control		*(2)			✓(3)	✓(3)
CORE REQUIREMENT #4 Conveyance System		*(2)	✓		✓	✓
CORE REQUIREMENT #5 Erosion & Sediment Control		✓	✓	✓	✓	✓
CORE REQUIREMENT #6 Maintenance & Operations		*(2)	✓	✓	✓	✓
CORE REQUIREMENT #7 Financial Guarantees & Liability		*(2)	✓(3)	✓(3)	✓(3)	✓(3)
CORE REQUIREMENT #8 Water Quality		*(2)			✓(3)	✓(3)
SPECIAL REQUIREMENT #1 Other Adopted Requirements		✓(3)			✓(3)	✓(3)
SPECIAL REQUIREMENT #2 Flood Hazard Area Delineation		✓(3)			✓(3)	✓(3)
SPECIAL REQUIREMENT #3 Flood Protection Facilities		✓(3)			✓(3)	✓(3)
SPECIAL REQUIREMENT #4 Source Control		✓(3)	✓(3)	✓(3)	✓(3)	✓(3)
SPECIAL REQUIREMENT #5 Oil Control				✓(3)	✓(3)	✓(3)

(1) Category 3 projects installing oil controls that construct or modify a 12-inch pipe/ditch are also Category 2 projects.

(2) May be applied by DDES based on project or ***site***-specific conditions.

(3) These requirements have exemptions or thresholds that may preclude or limit their application to a specific project.

DRAFT

1.1.2.1 SMALL PROJECT DRAINAGE REVIEW

Small Project Drainage Review is a simplified drainage review for small residential building, clearing, and subdivision projects or small ***agricultural projects*** that result in either (a) 10,000 square feet or less of impervious surface added on or after January 8, 2001 (the effective date of the ESA 4(d) Rule for Puget Sound Chinook salmon) or (b) less than 4% of total impervious surface as specified in this section. The core and special requirements applied under Full Drainage Review are replaced with simplified small project drainage requirements that can be applied by a non-engineer. These requirements include simple stormwater dispersion, infiltration, and ***site*** design techniques called flow control Best Management Practices (BMPs), which provide the necessary mitigation of flow and water quality impacts for small projects. Also included are simple measures for erosion and sediment control (ESC). This simplified form of drainage review acknowledges that drainage impacts for many small project proposals can be effectively mitigated without construction of costly flow control and water quality facilities.

The Small Project Drainage Review process minimizes the time and effort required to design, submit, review, and approve drainage facilities for these proposals. In most cases, the requirements can be met with submittals prepared by contractors, architects, or homeowners without the involvement of a ***civil engineer***.

Note: some projects subject to Small Project Drainage Review may also require Targeted Drainage Review if they meet any of the threshold criteria in Section 1.1.2.2 (p. 1-14).

Threshold

THRESHOLD

Small Project Drainage Review is required for any ***single family residential project*** or ***agricultural project*** that will result in 2,000 square feet[13] or more of ***new impervious surface***, ***replaced impervious surface***, or ***new*** plus ***replaced impervious surface***, or ~~35,000~~ 7,000 square feet or more of ~~***new pervious surface***~~ ***land disturbing activity***, AND that meets one of the following criteria:

- The project will result in no more than 10,000 square feet[13] of **total impervious surface** added on or after January 8, 2001, no more than 5,000 square feet of ***new impervious surface***, and no more than 35,000 square feet[13] of ***new pervious surface*** (for ***sites*** zoned as RA, F, or A, ~~this~~ the ***new pervious surface*** threshold may be increased to ~~70,000~~ 52,500 square feet[13] or ~~35% of the ***site***, whichever is greater~~to the remaining portion of the ***site*** if 65% or more of the ***site*** is preserved in native vegetation by clearing limit, covenant, easement, or tract), OR
- The project will result in no more than 10,000 square feet[13] of **total impervious surface** added on or after January 8, 2001 and its ***new pervious surface*** area will be no more than 35,000 square feet minus 3.25 times the area of ***new impervious surface*** being proposed by the project (for ***sites*** larger than 22,000 square feet, a factor of 2.25 may be used instead of 3.25, and for ***sites*** zoned as RA, F, or A, the allowable amount of ***new pervious surface*** calculated herein may be increased by 50% or may be the remaining portion of ***site*** if 65% or more of the ***site*** is preserved in native vegetation by clearing limit, covenant, easement, or tract), OR
- The project will result in no more than 4% **total impervious surface** and 15% ***new pervious surface*** on a single parcel ***site*** zoned as RA or F, or on a single or multiple parcel ***site*** zoned as A, AND all impervious surface area, except 10,000 square feet of it, will be set back from its natural location of discharge from the ***site*** at least 100 feet for every 10,000 square feet of **total impervious area**.

*Note: for the purposes applying this threshold to a proposed single family residential subdivision (i.e., plat or short plat project), the impervious surface coverage assumed on each created lot shall be 4,000 square feet (8,000 square feet if the **site** is zoned as RA) or the maximum allowed by KCC 21A.12.030,*

[13] The thresholds of 2,000 and 7,000 square feet shall be applied by project site. All other thresholds specified in terms of ~~, 10,000, 35,000, and 70,000~~ square feet of impervious or pervious surface shall be applied by ***threshold discharge area*** and in accordance with the definitions of these surfaces in Section 1.1. *Note: the calculation of total impervious surface added on after January 8, 2001 may exclude any such added impervious surface that is confirmed by DDES engineering staff to be already mitigated by a County approved and inspected flow control facility or BMP.*

DRAFT

whichever is less. A lower impervious surface coverage may be assumed for any lot in which the lower impervious surface coverage is set as the maximum through a declaration of covenant recorded for the lot. Also, the ***new pervious surface*** *assumed on each created lot shall be the entire lot area, except the assumed impervious portion and any portion in which native conditions are preserved by a clearing limit per KCC 16.82, a covenant or easement recorded for the lot, or a tract dedicated by the proposed subdivision.*

Scope of Requirements

REQMTS

IF Small Project Drainage Review is required, THEN the proposed project must comply with the simplified small project submittal and drainage design requirements detailed in *Small Project Drainage Requirements* adopted as Appendix C to this manual and available as a separate booklet from DNRP or DDES. These requirements include simplified BMPs/measures for flow control and erosion and sediment control.

Presumption of Compliance with Core and Special Requirements

The simplified drainage requirements applied under Small Project Drainage Review are considered sufficient to meet the overall intent of the core and special requirements in Sections 1.2 and 1.3, except under certain conditions when a proposed project has characteristics that trigger Targeted Drainage Review (see the threshold for Targeted Drainage Review in Section 1.1.2.2, p. 1-14) and may require the involvement of a ***civil engineer***. Therefore, any proposed project that is subject to Small Project Drainage Review as determined above and complies with the small project drainage requirements detailed in Appendix C is presumed to comply with all the core and special requirements in Sections 1.2 and 1.3 **except** those requirements that would apply to the project if it is subject to Targeted Drainage Review as specified in Section 1.1.2.2 (p. 1-14).

DRAFT

1.1.2.2 TARGETED DRAINAGE REVIEW

Targeted Drainage Review (TDR) is an abbreviated evaluation by DDES permit review staff of a proposed project's compliance with selected core and special requirements. Projects subject to this type of drainage review are typically Small Project Drainage Review proposals or other small projects that have ***site***-specific or project-specific drainage concerns that must be addressed by a ***civil engineer*** or DDES engineering review staff. Under Targeted Drainage Review, engineering costs associated with drainage design and review are kept to a minimum because the review includes only those requirements that would apply to the particular project.

Threshold

THRESHOLD

Targeted Drainage Review is required for any proposed project that is subject to drainage review as determined in Section 1.1.1 (p. 1-9) but is not subject to Full or Large Project Drainage Review as determined in Sections 1.1.2.3 (p. 1-17) and 1.1.2.4 (p. 1-18), AND that has the characteristics of one or more of the following project categories:

- **TDR Project Category #1:** Projects that contain or are adjacent to a ***flood hazard area***, ***erosion hazard area***, or ***steep slope hazard area*** as defined in KCC 21A.06; OR projects located within a ***Critical Drainage Area*** or ***Landslide Hazard Drainage Area***; OR projects that propose 7,000 square feet (~~3 acres~~1 acre if in Small Project Drainage Review) or more of ***land disturbing activity***. *Note: at the discretion of DDES, this category may also include any project in Small Project Drainage Review that has a design or* ***site****-specific issue that must be addressed by a* ***civil engineer****.*
- **TDR Project Category #2:** Projects that propose to ***construct or modify*** a drainage pipe/ditch that is 12 inches or more in size/depth or receives surface and storm water runoff from a drainage pipe/ditch that is 12 inches or more in size/depth.
- **TDR Project Category #3:** ***Redevelopment projects*** that propose $100,000 or more of improvements to an existing ***high-use site***.

Scope of Requirements

REQMTS

IF Targeted Drainage Review is required, THEN the applicant must demonstrate that the proposed project complies with the selected core and special requirements corresponding to the project category or categories that best match the proposed project. The project categories and applicable requirements for each are described below and summarized in Table 1.1.2.A (p. 1-12).

Note: If the proposed project has the characteristics of more than one project category, the requirements of each applicable category shall apply.

Compliance with these requirements requires the submittal of engineering plans and calculations stamped by a ***civil engineer***, unless deemed unnecessary by DDES. The engineer need only demonstrate compliance with those core and special requirements that have been predetermined to be applicable based on specific project characteristics as detailed below and summarized in Table 1.1.2.A (p. 1-12). The procedures and requirements for submitting engineering plans and calculations can be found in Section 2.3.

TDR Project Category #1

This category includes projects that are too small to trigger application of most core requirements, but may be subject to ***site***-specific floodplain or drainage requirements related to certain critical areas, or other area-specific drainage requirements adopted by the County. Such projects primarily include ***single family residential projects*** and ***agricultural projects*** in Small Project Drainage Review.

REQUIREMENTS

IF the proposed project meets the characteristics of TDR Project Category #1, THEN the applicant must demonstrate that the project complies with the following five requirements:

- Core Requirement #5: Erosion and Sediment Control, Section 1.2.5 (p. 1-54)
- Special Requirement #1: Other Adopted Area-Specific Requirements, Section 1.3.1 (p. 1-75)
- Special Requirement #2: Floodplain/Floodway Analysis, Section 1.3.2 (p. 1-77)
- Special Requirement #3: Flood Protection Facilities, Section 1.3.3 (p. 1-78)
- Special Requirement #4: Source Control, Section 1.3.4 (p. 1-79)

DRAFT

In addition, **DDES may require** the applicant to demonstrate compliance with any one or more of the **remaining seven core requirements** in Section 1.2 based on project or ***site***-specific conditions. For example, if the proposed project discharges to an ***erosion*** or ***steep slope hazard area*** as defined in KCC 21A.06, DDES may require compliance with "Core Requirement #1: Discharge at the Natural Location" (Section 1.2.1, p. 1-21). This may in turn require compliance with "Core Requirement #2: Offsite Analysis" (Section 1.2.2, p. 1-23) if a tightline is required by Core Requirement #1. If a tightline is found to be infeasible, DDES may instead require a flow control facility per "Core Requirement #3: Flow Control" (Section 1.2.3, p. 1-29). If a tightline is feasible, "Core Requirement #4: Conveyance System" (Section 1.2.4, p. 1-48) would be required to ensure proper size and design. Any required flow control facility or tightline system may also trigger compliance with "Core Requirement #6: Maintenance and Operations" (Section 1.2.6, p. 1-58), "Core Requirement #7: Financial Guarantees and Liability" (Section 1.2.7, p. 1-59), and possibly "Core Requirement #8, Water Quality" (Section 1.2.8, p. 1-61) if runoff from ***pollution-generating impervious surfaces*** is collected.

The applicant may also need to address compliance with any applicable critical areas requirements in KCC 21A as determined by DDES.

TDR Project Category #2

This category is intended to apply selected core and special requirements to those projects that propose to ***construct or modify*** a drainage system of specified size, but are not adding sufficient impervious surface to trigger Full Drainage Review or Large Project Drainage Review.

REQUIREMENTS

IF the proposed project meets the characteristics of TDR Project Category #2, THEN the applicant must demonstrate that the proposed project complies with the following requirements:

- Core Requirement #1: Discharge at the Natural Location, Section 1.2.1 (p. 1-21)
- Core Requirement #2: Offsite Analysis, Section 1.2.2 (p. 1-23)
- Core Requirement #4: Conveyance System, Section 1.2.4 (p. 1-48)
- Core Requirement #5: Erosion and Sediment Control, Section 1.2.5 (p. 1-54)
- Core Requirement #6: Maintenance and Operations, Section 1.2.6 (p. 1-58)
- Core Requirement #7: Financial Guarantees and Liability, Section 1.2.7 (p. 1-59)
- Special Requirement #4: Source Control, Section 1.3.4 (p. 1-79).

TDR Project Category #3

This category is intended to improve water quality by applying source control and oil control requirements to ***redevelopment projects*** located on the most intensively used ***sites*** developed prior to current water quality requirements. These are referred to as ***high-use sites***.

REQUIREMENTS

IF the proposed project meets the characteristics of TDR Project Category #3, THEN the applicant must demonstrate that the proposed project complies with the following requirements:

- Core Requirement #5: Erosion and Sediment Control, Section 1.2.5 (p. 1-54)
- Core Requirement #6: Maintenance and Operations, Section 1.2.6 (p. 1-58)
- Core Requirement #7: Financial Guarantees and Liability, Section 1.2.7 (p. 1-59)
- Special Requirement #4: Source Control, Section 1.3.4 (p. 1-79)
- Special Requirement #5: Oil Control, Section 1.3.5 (p. 1-80).

Note: In some cases, DDES may determine that application of these requirements does not require submittal of engineering plans and calculations stamped by a ***civil engineer****. For example, if catch basin inserts are proposed to meet oil control requirements, engineered plans and calculations may not be necessary. A plot plan showing catch basin locations may suffice.*

DRAFT

1.1.2.3 FULL DRAINAGE REVIEW

Full Drainage Review is the evaluation by King County staff (DDES unless otherwise specified in KCC 9.04) of a proposed project's compliance with the full range of core and special requirements in this chapter. This review addresses the impacts associated with changing land cover on typical ***sites***.

Threshold

THRESHOLD

Full Drainage Review is required for any proposed project, including a ***redevelopment project***, that is subject to drainage review as determined in Section 1.1.1 (p. 1-9), AND that meets one or more of the following criteria:

- The project will result in 2,000 square feet[14] or more of ***new impervious surface***, ***replaced impervious surface***, and ***new*** plus ***replaced impervious surface*** but is not subject to Small Project Drainage Review as determined in Section 1.1.2.1 (p. 1-13), OR
- The project will result in ~~35,000~~ 7,000 square feet[14] or more of ~~***new pervious surface***~~ ***land disturbing activity*** but is not subject to Small Project Drainage Review per Section 1.1.2.1, OR
- The project is a ***redevelopment project*** on a parcel or combination of parcels in which the total of ***new*** **plus** ***replaced impervious surface*** is 5,000 square feet[14] or more and whose valuation of proposed improvements (including interior improvements and excluding required mitigation and frontage improvements) exceeds 50% of the **assessed value** of the existing parcel improvements.

Scope of Requirements

REQMTS

IF Full Drainage Review is required, THEN the applicant must demonstrate that the proposed project complies with the following requirements:

- All eight core requirements in Section 1.2
- All five special requirements in Section 1.3

Engineering plans and calculations stamped by a ***civil engineer*** must be submitted to demonstrate compliance with these requirements. The procedures and requirements for submittal of engineering plans and calculations are found in Section 2.3.

DRAFT

[14] The thresholds of 2,000, 5,000, and ~~35,000~~ 7,000 square feet ~~of ***new impervious, replaced impervious***, and ***new pervious surface***~~ shall be applied by ~~***threshold discharge area***~~ ***project site***.

1.1.2.4 LARGE PROJECT DRAINAGE REVIEW

Large Project Drainage Review is applied to development proposals that are large and/or involve resources or problems of special sensitivity or complexity. Because of the large size and complexities involved, there is usually a greater risk of significant impact or irreparable damage to sensitive resources. Such proposals often require a more definitive approach to drainage requirements than that prescribed by the core and special requirements in Sections 1.2 and 1.3; it may be appropriate to collect additional information about ***site*** resources, use more sophisticated models, and prepare special studies not specified in this manual. Large Project Drainage Review entails preparation of a **master drainage plan (MDP)** or limited scope MDP that is reviewed and approved by DDES.

Threshold

THRESHOLD

Large Project Drainage Review is required for any proposed project that is subject to drainage review as determined in Section 1.1.1 (p. 1-9), AND that meets any one of the following criteria:

- The project is designated for an **Urban Planned Development (UPD)** on the King County Comprehensive Plan Land Use Map, OR
- The project would, at full buildout, result in 50 acres or more of ***new impervious surface*** within a single subbasin or multiple subbasins that are *hydraulically connected*[15] across subbasin boundaries, OR
- The ***project site*** is 50 acres or more (including growth reserve areas) within a ***critical aquifer recharge area*** as defined in KCC 21A.06.

Scope of Requirements

REQUIREMENTS

IF Large Project Drainage Review is required, THEN the applicant must do the following:

1. Prepare a **MDP**, limited scope MDP, or special study in accordance with the process and requirements described in the MDP guidelines, *Master Drainage Planning for Large or Complex Site Developments*, available from DNRP or DDES. The MDP or special study shall be completed, or a schedule for completion identified and agreed to by DDES, prior to permit approval. *Note: Generally, it is most efficient for the MDP process to parallel the State Environmental Policy Act (SEPA) process.*
2. Demonstrate that the proposed project complies with all the core and special requirements in Sections 1.2 and 1.3, with some **potential modifications as follows:**
   - Core Requirement #2, Offsite Analysis, is typically modified during MDP scoping.
   - Core Requirement #3, Flow Control, may be modified to require more sophisticated hydrologic modeling.
   - Core Requirement #5, ESC, may be modified to require enhanced construction monitoring.
   - Core Requirement #7, Financial Guarantees and Liability, may be modified to implement a monitoring fund.
   - ~~Core Requirement #8, Water Quality, experimental facilities may be pursued without additional adjustments.~~
   - Special pre- and post-development monitoring may also be required if deemed necessary by DDES to adequately characterize sensitive ***site*** and downstream resources, and to ensure that onsite drainage controls and mitigation measures are effective in protecting sensitive or critical resources. Detailed guidelines for monitoring are appended to the MDP guidelines referenced above.

DRAFT

[15] *Hydraulically connected* means connected through surface flow or water features such as wetlands or lakes.

1.1.3 DRAINAGE REVIEW REQUIRED BY OTHER AGENCIES

Drainage review for a proposed project's impact on surface and storm waters may be addressed by processes or requirements apart from King County's. Agencies such as those listed below may require some form of drainage review and impose drainage requirements that are separate from and in addition to King County's drainage requirements. The applicant is responsible for coordinating with these agencies and resolving any conflicts in drainage requirements. *Note: King County is required to advise the Muckleshoot Indian Tribe of development proposals affecting certain critical areas or water bodies bearing anadromous fish.*

Agency	Permit/Approval
Seattle/King County Department of Public Health	Onsite Sewage Disposal and Well permits
Washington State	
Department of Transportation	Developer/Local Agency Agreement
Department of Fish and Wildlife	Hydraulic Project Approval
Department of Ecology	Short Term Water Quality Modification Approval Dam Safety permit NPDES Stormwater permit
Department of Natural Resources	Forest Practices Class IV permit
United States Army Corps of Engineers	Sections 10, 401, and 404 permits

DRAFT

1.1.4 DRAINAGE DESIGN BEYOND MINIMUM COMPLIANCE

This manual presents King County's minimum standards for engineering and design of drainage facilities. While the County believes these standards are appropriate for a wide range of development proposals, compliance solely with these requirements does not relieve the professional engineer submitting designs of his or her responsibility to ensure drainage facilities are engineered to provide adequate protection for natural resources and public and private property.

Compliance with the standards in this manual does not necessarily mitigate all probable and significant environmental impacts to aquatic biota. Fishery resources and other living components of aquatic systems are affected by a complex set of factors. While employing a specific flow control standard may prevent stream channel erosion or instability, other factors affecting fish and other biotic resources (e.g., increases in stream flow velocities) are not directly addressed by this manual. Likewise, some wetlands, including bogs, are adapted to a very constant hydrological regime. Even the most stringent flow control standard employed by this manual does not prevent increases in runoff volume, which can adversely affect wetland plant communities by increasing the duration and magnitude of water level fluctuations. Thus, compliance with this manual should not be construed as mitigating all probable and significant stormwater impacts to aquatic biota in streams and wetlands; additional mitigation may be required.

In addition, the requirements in this manual target the types of impacts associated with the most typical land development projects occurring in the lowland areas of the County. Applying these requirements to vastly different types of projects, such as rock quarries or dairy farms, or in different climatic situations, such as ski areas, may result in poorer mitigation of impacts. Therefore, different mitigation may be required.

Additional mitigation may also be required to compensate for loss of critical area habitat functions associated with reducing standard buffer widths and clearing restrictions as allowed through the approval of Rural Stewardship Plans and Farm Management Plans per KCC 21A.24 and KCC 16.82.

DRAFT

1.2 CORE REQUIREMENTS

This section details the following eight core requirements:

- "Core Requirement #1: Discharge at the Natural Location," Section 1.2.1
- "Core Requirement #2: Offsite Analysis," Section 1.2.2 (p. 1-23)
- "Core Requirement #3: Flow Control," Section 1.2.3 (p. 1-29)
- "Core Requirement #4: Conveyance System," Section 1.2.4 (p. 1-48)
- "Core Requirement #5: Erosion and Sediment Control," Section 1.2.5 (p. 1-54)
- "Core Requirement #6: Maintenance and Operations," Section 1.2.6 (p. 1-58)
- "Core Requirement #7: Financial Guarantees and Liability," Section 1.2.7 (p. 1-59)
- "Core Requirement #8: Water Quality," Section 1.2.8 (p. 1-61).

1.2.1 CORE REQUIREMENT #1: DISCHARGE AT THE NATURAL LOCATION

REQUIREMENT

All surface and storm water runoff from a project must be discharged at the natural location so as not to be diverted onto or away from downstream properties. The manner in which runoff is discharged from the ***project site*** must not create a significant adverse impact to downhill properties or drainage systems (see "Discharge Requirements" below). *Note: Projects that do not discharge all* ***project site*** *runoff at the natural location will require an approved adjustment of this requirement (see Section 1.4). DDES may waive this adjustment, however, for projects in which only a small portion of the* ***project site*** *does not discharge runoff at the natural location and the runoff from that portion is unconcentrated and poses no significant adverse impact to downstream properties.*

DRAFT

Intent: To prevent adverse impacts to downstream properties caused by diversion of flow from one flowpath to another, and to discharge in a manner that does not significantly impact downhill properties or drainage systems. Diversions can cause greater impacts (from greater runoff volumes) than would otherwise occur from new development discharging runoff at the natural location. Diversions can also impact properties that rely on runoff water to replenish wells and ornamental or fish ponds.

❑ DISCHARGE REQUIREMENTS

Proposed projects must comply with the following discharge requirements (1, 2, and 3) as applicable:

1. Where no conveyance system exists at the abutting downstream property line and the natural (existing) discharge is unconcentrated, any runoff concentrated by the proposed project must be discharged as follows:

   a) IF the 100-year peak discharge[16] is less than or equal to 0.2 cfs under existing conditions and will remain less than or equal to 0.2 cfs under developed conditions, THEN the concentrated runoff may be discharged onto a rock pad or to any other system that serves to disperse flows.

   b) IF the 100-year peak discharge is less than or equal to 0.5 cfs under existing conditions and will remain less than or equal to 0.5 cfs under developed conditions, THEN the concentrated runoff may be discharged through a dispersal trench or other dispersal system provided the applicant can demonstrate that there will be no significant adverse impact to downhill properties or drainage systems.

[16] Peak discharges for applying this requirement are determined using KCRTS with 15-minute time steps as detailed in Chapter 3.

c) IF the 100-year peak discharge is greater than 0.5 cfs for either existing or developed conditions, or if a significant adverse impact to downhill properties or drainage systems is likely, THEN a conveyance system must be provided to convey the concentrated runoff across the downstream properties to an acceptable discharge point.[17] Drainage easements for this conveyance system must be secured from downstream property owners and recorded prior to engineering plan approval.

2. IF a proposed project, or any ***natural discharge area*** within a project, is located within a ***Landslide Hazard Drainage Area*** and drains over the erodible soils of a ***landslide hazard area*** with slopes steeper than 15%, THEN a **tightline system must be provided** through the ***landslide hazard area*** to an acceptable discharge point unless one of the following exceptions applies. The tightline system must comply with the design requirements in Core Requirement #4 and in Section 4.2.2 unless otherwise approved by DDES. Drainage easements for this system must be secured from downstream property owners and recorded prior to engineering plan approval.

   Exceptions: A tightline is not required for any ***natural discharge location*** where one of the following conditions can be met:

   a) Less than 2,000 square feet of ***new impervious surface*** will be added within the ***natural discharge area***, OR

   b) All runoff from the ***natural discharge area*** will be infiltrated for runoff events up to and including the 100-year event, OR

   c) The *developed conditions runoff volume*[18] from the ***natural discharge area*** is less than 50% of the existing conditions runoff volume from other areas draining to the location where runoff from the ***natural discharge area*** enters the ***landslide hazard area*** onto slopes steeper than 15%, AND the provisions of Discharge Requirement 1 are met, OR

   d) DDES determines that a tightline system is not physically feasible or will create a significant adverse impact based on a soils report by a geotechnical engineer.

3. For projects adjacent to or containing a ***landslide***, ***steep slope***, or ***erosion hazard area*** as defined in KCC 21A.06, the applicant must demonstrate that onsite drainage facilities and/or flow control BMPs will not create a significant adverse impact to downhill properties or drainage systems.

DRAFT

[17] *Acceptable discharge point* means an enclosed drainage system (i.e., pipe system, culvert, or tightline) or open drainage feature (e.g., ditch, channel, swale, stream, river, pond, lake, or wetland) where concentrated runoff can be discharged without creating a significant adverse impact.

[18] For the purposes of applying this exception, the *developed conditions runoff volume* is the average annual runoff volume as computed with KCRTS per Chapter 3. Any areas assumed not to be cleared when computing the developed conditions runoff volume must be set aside in an open space tract or covenant in order for the proposed project to qualify for this exception. Preservation of existing forested areas in Landslide Hazard Drainage Areas is encouraged.

1.2.2 CORE REQUIREMENT #2: OFFSITE ANALYSIS

REQMT

All proposed projects must submit an offsite analysis report that assesses potential offsite drainage impacts associated with development of the ***project site*** and proposes appropriate mitigation of those impacts. The initial permit submittal shall include, at minimum, a **Level 1 downstream analysis** as described in Section 1.2.2.1 below. If impacts are identified, the proposed projects shall meet any applicable problem-specific requirements for mitigation of impacts specified in Section 1.2.2.2 (p. 1-26).

Intent: To identify and evaluate offsite flooding and erosion problems that may be created or aggravated by the proposed project, and to ensure appropriate measures are provided for preventing creation or aggravation of those problems. In addition, this requirement is intended to ensure appropriate provisions are made, as needed, to mitigate other identified impacts associated with the quantity of surface and storm water runoff from the ***project site*** (e.g., impacts to the hydrology of a wetland as may be identified by a "critical area report" per KCC 21A.24.110).

The primary component of an offsite analysis report is the **downstream analysis**, which examines the drainage system within one-quarter mile downstream of the ***project site*** or farther as described in Section 1.2.2.1 below. It is intended to identify existing or potential/predictable downstream flooding and erosion problems so that appropriate mitigation, as specified in Section 1.2.2.2 (p. 1-26), can be provided to prevent aggravation of these problems. A secondary component of the offsite analysis report is an **evaluation of the upstream drainage system** to verify and document that significant flooding and erosion impacts will not occur as a result of the proposed project. The evaluation must extend upstream to a point where any backwater effects created by the project cease.

DRAFT

❑ EXEMPTION FROM CORE REQUIREMENT #2

A proposed project is exempt from Core Requirement #2 if any one of the following is true:

1. DDES determines there is sufficient information for them to conclude that the project will not have a significant adverse impact on the downstream and/or upstream drainage system, OR
2. The project adds less than 2,000 square feet of ***new impervious surface***, AND less than 35,000 square feet of ***new pervious surface***, AND does not ***construct or modify*** a drainage pipe/ditch that is 12 inches or more in size/depth or that receives runoff from a drainage pipe/ditch that is 12 inches or more in size/depth, AND does not contain or lie adjacent to a ***landslide***, ***steep slope***, or ***erosion hazard area*** as defined in KCC 21A.06, OR
3. The project does not change the rate, volume, duration, or location of discharges to and from the ***project site*** (e.g., where existing impervious surface is replaced with other impervious surface having similar runoff-generating characteristics, or where pipe/ditch modifications do not change existing discharge characteristics).

1.2.2.1 DOWNSTREAM ANALYSIS

The level of downstream analysis required depends on specific ***site*** and downstream conditions. Each project submittal must include at least a Level 1 downstream analysis. Upon review of the Level 1 analysis, DDES may require a Level 2 or Level 3 analysis. If conditions warrant, additional, more detailed analysis may be required.

The **Level 1 downstream analysis** is a qualitative survey of each downstream system and is the first step in identifying flooding or erosion problems as described below under "Downstream Drainage Problems Requiring Special Attention." Each Level 1 analysis is composed of four tasks at a minimum:

- **Task 1**: Define and map the study area
- **Task 2**: Review all available information on the study area
- **Task 3**: Field inspect the study area

- **Task 4**: Describe the drainage system, and its existing and predicted problems.

Upon review of the Level 1 analysis, DDES may require a Level 2 or 3 downstream analysis, depending on the presence of existing or predicted flooding, erosion, or nuisance problems identified in the Level 1 analysis.

Levels 2 and 3 downstream analysis quantify downstream problems by providing information on the severity and frequency of an existing problem or the likelihood of creating a new problem. A Level 2 analysis is a rough quantitative analysis (non-survey field data, uniform flow analysis). Level 3 is a more precise analysis (survey field data, backwater analysis) of significant problems. If conditions warrant, additional, more detailed analysis may be required beyond Level 3. For Levels 2 and 3 downstream analysis, an additional **Task 5**, addressing mitigation of existing and potential problems, will be required.

Extent of Downstream Analysis

The downstream analysis must consider the existing conveyance system(s) for a **minimum flowpath distance downstream** of one-quarter mile and beyond that, as needed, to reach a point where the ***project site*** area constitutes less than 15% of the tributary area. This minimum distance **may be increased** as follows:

- **Task 2** of a Level 1 downstream analysis (described in detail in Section 2.3.1.1) is a review of all available information on the downstream area and is intended to identify existing drainage problems. *In all cases, this information review shall extend one mile downstream of the* ***project site***. The existence of flooding or erosion problems further downstream may extend the one-quarter-mile minimum distance for other tasks to allow evaluation of impacts from the proposed development upon the identified problems.
- If a project's impacts to flooding or erosion problems are mitigated by improvements to the downstream conveyance system, the downstream analysis will extend a minimum of one-quarter mile beyond the improvement. This is necessary because many such improvements result in a reduction of stormwater storage or an increase in peak flows from the problem location.
- At their discretion, DDES may extend the downstream analysis beyond the minimum distance specified above on the reasonable expectation of drainage impacts.

A detailed description of the scope of offsite analysis and submittal requirements is provided in Section 2.3.1.1. Hydrologic analysis methods and requirements for Levels 2 and 3 downstream analysis are contained in Chapter 3; hydraulic analysis methods are contained in Chapter 4.

❑ DOWNSTREAM DRAINAGE PROBLEMS REQUIRING SPECIAL ATTENTION

While the area-specific flow control facility requirement in Core Requirement #3 (Section 1.2.3.1) serves to minimize the creation and aggravation of many types of downstream drainage problems, there are some types that are more sensitive to creation/aggravation than others depending on the nature or severity of the problem and which flow control facility standard is being applied. In particular, there are three types of downstream drainage problems for which the County has determined that the nature and/or severity of the problem warrants additional attention through the downstream analysis and possibly additional mitigation to ensure no creation/aggravation:

1. ***Conveyance system nuisance problems***
2. ***Severe erosion problems***
3. ***Severe flooding problems***.

These three types of downstream drainage problem are further described below and precisely defined at the beginning of Chapter 1.

DRAFT

Conveyance System Nuisance Problems (Type 1)

Conveyance system nuisance problems are minor but chronic flooding or erosion problems that result from the overflow of a constructed conveyance system that is substandard or has become too small as a result of upstream development. Such problems warrant additional attention because of their chronic nature and because they result from the failure of a conveyance system to provide a minimum acceptable level of protection (see definition below).

If a ***conveyance system nuisance problem*** is identified or predicted downstream, the need for additional mitigation must be evaluated as specified in Section 1.2.2.2 under "Problem-Specific Mitigation Requirements" (p. 1-27). This may entail additional onsite flow control or other measures as needed to prevent creation or significant aggravation of the problem.

For any other nuisance problem that may be identified downstream, this manual does not require mitigation beyond the area-specific flow control facility requirement applied in Core Requirement #3 (Section 1.2.3.1) because preventing aggravation of such problems (e.g., those caused by the elevated water surfaces of ponds, lakes, wetlands, and closed depressions or those involving downstream erosion) can require two to three times as much onsite detention volume, which is considered unwarranted for nuisance problems. However, if under some unusual circumstance, the aggravation of such a nuisance problem is determined by DDES to be a significant adverse impact, additional mitigation may be required.

Severe Erosion Problems (Type 2)

Severe erosion problems can be caused by conveyance system overflows or the concentration of runoff into erosion-sensitive open drainage features. ***Severe erosion problems*** warrant additional attention because they pose a significant threat either to health and safety or to public or private property.

If a ***severe erosion problem*** is identified or predicted downstream, additional mitigation must be considered as specified in Section 1.2.2.2 under "Problem-Specific Mitigation Requirements" (p. 1-27). This may entail additional onsite flow control or other measures as needed to prevent creation or aggravation of the problem.

DRAFT

Severe Flooding Problems (Type 3)

Severe flooding problems can be caused by conveyance system overflows or the elevated water surfaces of ponds, lakes, wetlands, or closed depressions. ***Severe flooding problems*** warrant additional attention because they pose a significant threat either to health and safety or to public or private property.

If a ***severe flooding problem*** is identified or predicted downstream, the need for additional mitigation must be evaluated as specified in Section 1.2.2.2 under "Problem-Specific Mitigation Requirements" (p. 1-27). This may entail consideration of additional onsite flow control or other measures as needed to prevent creation or significant aggravation of the problem.

1.2.2.2 IMPACT MITIGATION

A proposed project must not significantly aggravate existing downstream drainage problems or create new problems as a result of developing the ***site****.* This manual does not require development proposals to fix or otherwise reduce the severity of existing downstream drainage problems, although doing so may be an acceptable mitigation.

Principles of Impact Mitigation for Drainage Problems

Aggravation of an existing downstream problem means increasing the frequency of occurrence and/or severity of the problem. Increasing peak flows at the location of a problem caused by conveyance system overflows can increase the frequency of the problem's occurrence. Increasing durations of flows at or above the overflow return frequency can increase the severity of the problem by increasing the depth and duration of flooding. Controlling peaks and durations through onsite detention can prevent aggravation of such problems by releasing the increased volumes from development at return frequencies below the conveyance overflow return frequency, which limits their effect to just causing the conveyance system to flow full for a longer period of time.

When a problem is caused by high water-surface elevations of a volume-sensitive water body, such as a lake, wetland, or closed depression, aggravation is the same as for problems caused by conveyance overflows. Increasing the volume of flows to a volume-sensitive water body can increase the frequency of the problem's occurrence. Increasing the duration of flows for a range of return frequencies both above and below the problem return frequency can increase the severity of the problem; mitigating these impacts requires control of flow durations for a range of return frequencies both above and below the problem return frequency. The net effect of this duration control is to release the increased volumes from development only at water surface elevations below that causing the problem, which in turn can cause an increase in these lower, but more frequently occurring, water surface elevations. This underscores an unavoidable impact of development upstream of volume-sensitive water bodies: the increased volumes generated by the development will cause some range of increase in water surface elevations, no matter what detention standard is applied.

Creating a new problem means increasing peak flows and/or volumes so that after development, the frequency of conveyance overflows or water surface elevations exceeds the thresholds for the various problem types discussed in Section 1.2.2.1. For example, application of the Level 1 flow control standard requires matching the ***existing site conditions*** 2- and 10-year peak flows. The 100-year peak flow is only partially attenuated, and the flow increase may be enough to cause a ***severe flooding problem*** as described on page 1-25. The potential for causing a new problem is often identified during the Level 1 downstream analysis, where the observation of a reduction in downstream pipe sizes, for example, may be enough to predict creation of a new problem. A Level 2 or 3 analysis will typically be required to verify the capacity of the system and determine whether 100-year flows can be safely conveyed.

Significance of Impacts to Existing Drainage Problems

The determination of whether additional onsite mitigation or other measures are needed to address an existing downstream problem depends on the significance of the proposed project's predicted impact on that problem. For some identified problems, DDES will make the determination as to whether the project's impact is significant enough to require additional mitigation. For the three types of downstream problems described on pages 1-24 and 1-25, this threshold of significant impact or aggravation is defined below.

For ***conveyance system nuisance problems***, the problem is considered significantly aggravated if there is any increase in the project's contribution to the frequency of occurrence and/or severity of the problem for runoff events less than or equal to the 10-year event. *Note: Increases in the project's contribution to this type of problem are considered to be prevented if sufficient onsite flow control and/or offsite improvements are provided as specified in Table 1.2.3.A (p. 1-31).*

DRAFT

For ***severe erosion problems***, the problem is considered significantly aggravated if there is any increase in the project's existing contribution to the *flow duration*[19] of peak flows ranging from 50% of the 2-year peak flow up to the full 50-year peak flow at the eroded area. *Note: Increases in the project's contribution to this type of problem are considered to be prevented if Level 2 flow control or offsite improvements are provided as specified in Table 1.2.3.A (p. 1-31).*

For ***severe building flooding problems***, the problem is considered significantly aggravated if there is any increase in the project's existing contribution[20] to the frequency, depth, or duration of the problem for runoff events less than or equal to the 100-year event.

For ***severe roadway flooding problems***, the problem is considered significantly aggravated if any of the following thresholds are exceeded and there is any increase in the project's existing contribution[20] to the frequency, depth, or duration of the problem for runoff events less than or equal to the 100-year event:

- The *existing flooding*[21] over all lanes of a **roadway** or overtopping the culverted section of a **sole access driveway** is predicted to increase in depth more than a quarter-inch or 10% (whichever is greater) for the 100-year runoff event.
- The existing flooding over all lanes of a **roadway** or severely impacting a **sole access driveway** is more than 6 inches deep or faster than 5 feet per second for runoff events less than or equal to the 100-year event. A **severely impacted sole access driveway** is one in which flooding overtops a culverted section of the driveway, posing a threat of washout or unsafe access conditions due to indiscernible driveway edges, or flooding is deeper than 6 inches on the driveway, posing a severe impediment to emergency access.
- The existing flooding over all lanes of a *sole access roadway*[22] is more than 3 inches deep or faster than 5 feet per second for runoff events less than or equal to the 100-year event, or is at any depth for runoff events less than or equal to the 10-year event.

DRAFT

❑ PROBLEM-SPECIFIC MITIGATION REQUIREMENTS

1. IF a proposed project or ***threshold discharge area*** within a project drains to one or more of the three types of downstream drainage problems described in Section 1.2.2.1 (pages 1-24 and 1-25) as identified through a downstream analysis, THEN the applicant must do one of the following:

   a) Submit a Level 2 or Level 3 downstream analysis per Section 2.3.1 demonstrating that the proposed project will not create or significantly aggravate the identified downstream problem(s), OR

   b) Show that the ***natural discharge area*** or ***threshold discharge area*** draining to the identified problem(s) qualifies for an exemption from Core Requirement #3: Flow Control (Section 1.2.3, p. 1-29) or an exception from the applicable area-specific flow control facility requirement per Section 1.2.3.1 (p. 1-30), OR

   c) Document that the applicable area-specific flow control facility requirement specified in Core Requirement #3 is adequate to prevent creation or significant aggravation of the identified

[19] *Flow duration* means the aggregate time that peak flows are at or above a particular flow rate (e.g., the amount of time over the last 50 years that peak flows were at or above the 2-year flow rate). *Note: flow duration is not considered to be increased if it is within the tolerances specified in Chapter 3.*

[20] Increases in the project's contribution are considered to be prevented if sufficient onsite flow control and/or offsite improvements are provided as specified for ***severe flooding problems*** in Table 1.2.3.A (p. 1-31). For ***severe flooding problems*** located within the mapped 100-year floodplain of a ***major receiving water*** (see Table 1.2.3.B, p. 1-32) or the mapped 100-year floodplain of a major stream for which there is an adopted basin plan, increases in the project's contribution are considered negligible (zero) regardless of the flow control standard being applied, unless DDES determines there is a potential for increased flooding separate from that associated with the existing 100-year floodplain.

[21] *Existing flooding*, for the purposes of this definition, means flooding over all lanes of the roadway or driveway has occurred in the past and can be verified by County records, County personnel, photographs, or other physical evidence.

[22] *Sole access roadway* means there is no other flood-free route for emergency access to one or more dwelling units.

downstream problem(s) as indicated in Table 1.2.3.A (p. 1-31) with the phrase, "No additional flow control needed," OR

d) Provide additional onsite flow control necessary to prevent creation or significant aggravation of the downstream problem(s) as specified in Table 1.2.3.A (p. 1-31) and further detailed in Section 3.3.5, OR

e) Provide offsite improvements necessary to prevent creation or significant aggravation of the identified downstream drainage problem(s) as detailed in Chapter 3 unless identified as not necessary in Table 1.2.3.A (p. 1-31), OR

f) Provide a combination of additional onsite flow control and offsite improvements sufficient to prevent creation or significant aggravation of the downstream drainage problem(s) as demonstrated by a Level 2 or Level 3 downstream analysis.

2. IF it is identified that the manner of discharge from a proposed project may create a significant adverse impact as described in Core Requirement #1, THEN DDES may require the applicant to implement additional measures or demonstrate that the impact will not occur.

3. IF it is identified through a critical area review per KCC 21A.24.100 that the quantity of surface and storm water runoff from a proposed project or ***threshold discharge area*** within a proposed project could significantly alter the hydrology of a wetland, THEN DDES may require the applicant to implement additional flow control or other measures to mitigate the adverse impacts of this alteration in accordance with the wetland hydrology protection guidelines in Reference Section 5.

Intent: To ensure provisions are made (if necessary) to prevent creation or significant aggravation of the three types of downstream problems requiring special attention by this manual, and to ensure compliance with the discharge requirements of Core Requirement #1.

In addressing downstream problems per Problem-Specific Mitigation Requirement 1 above, additional onsite flow control will often be the easiest provision to implement. This involves designing the required onsite flow control facility to meet an additional set of performance criteria targeted to prevent significant aggravation of specific downstream problems. To save time and analysis, a set of predetermined flow control performance criteria corresponding to each of the three types of downstream problems is provided in Table 1.2.3.A (p. 1-31) and described in more detail in Chapter 3.

Note that in some cases the area-specific flow control facility requirement applicable to the proposed project per Section 1.2.3.1 (p. 1-30) is already sufficient to prevent significant aggravation of many of the defined downstream problem types. Such situations are noted in Table 1.2.3.A (p. 1-31) as not needing additional onsite flow control or offsite improvements. For example, if the project is located within a Conservation Flow Control Area subject to the Level 2 flow control standard per Section 1.2.3.1.B (p. 1-36), and a ***conveyance system nuisance problem*** is identified through offsite analysis per Core Requirement #2, no additional onsite flow control is needed, and no offsite improvements are necessary.

DRAFT

1.2.3 CORE REQUIREMENT #3: FLOW CONTROL

REQUIREMENT

All proposed projects, including ***redevelopment projects***, must provide onsite flow control facilities or flow control BMPs or both to mitigate the impacts of storm and surface water runoff generated by ***new impervious surface***, ***new pervious surface***, and ***replaced impervious surface*** targeted for flow mitigation as specified in the following sections. **Flow control facilities** must be provided and designed to perform as specified by the area-specific flow control facility requirement in Section 1.2.3.1 (p. 1-30) and in accordance with the applicable flow control facility implementation requirements in Section 1.2.3.2 (p. 1-42). **Flow control BMPs** must be provided as directed by the flow control BMPs requirement in Section 1.2.3.3 (p. 1-47) and applied as specified by the flow control BMP requirements in Section 5.2.

Intent: To ensure the minimum level of control needed to protect downstream properties and resources from increases in peak, duration, and volume of runoff generated by new development. The level of control varies depending on location and downstream conditions identified under Core Requirement #2.

❑ EXEMPTIONS FROM CORE REQUIREMENT #3

There are three possible exemptions from the flow control provisions of Core Requirement #3:

1. Basic Exemption

A proposed project ~~or any ***threshold discharge area*** within the ***site*** of a project~~ is exempt if it meets all of the following criteria:

a) Less than 2,000 square feet of ***new*** plus ***replaced*** ***impervious surface*** will be ~~added~~created, AND

~~b) If the project is a ***redevelopment project***, less than 5,000 square feet of ***new*** plus ***replaced impervious surface*** will be created, AND~~

~~c)~~b) Less than 35,000 square feet of ***new pervious surface***[23] will be added.

2. Impervious Surface Exemption for Transportation Redevelopment Projects

A proposed ***transportation redevelopment project*** ~~or any ***threshold discharge area*** within the ***site*** of such a project~~ is exempt if it meets all of the following criteria:

a) Less than 2,000 square feet of ***new impervious surface*** will be added, AND

b) Less than 35,000 square feet of ***new pervious surface***[23] will be added, AND

c) The **total** ***new impervious surface*** within the project limits is less than 50% of the existing impervious surface.

3. Cost Exemption for Parcel Redevelopment Projects

A proposed ***redevelopment project*** on a single or multiple parcel ***site*** ~~or any ***threshold discharge area*** within the ***site*** of such a project~~ is exempt if it meets all of the following criteria:

a) Less than 2,000 square feet of ***new*** plus ***replaced*** ***impervious surface*** will be ~~added~~created, AND

b) Less than 35,000 square feet of ***new pervious surface***[23] will be added, AND

c) The **valuation** of the project's proposed improvements (including interior improvements and excluding required mitigation improvements) is less than 50% of the assessed value of the existing ***site*** improvements.

[23] Note: If the project's ***new pervious surface*** exceeds 7,000 square feet, the soil moisture holding capacity of the ***new pervious surface*** must be protected in accordance with KCC 16.82.100 (F) and (G). KCC 16.82.100(F) requires that the duff layer or native topsoil be retained to the maximum extent practicable. KCC 16.82.100(G) requires soil amendment to mitigate for lost moisture holding capacity where compaction or removal of some or all of the duff layer or underlying topsoil has occurred, except in areas subject to a state surface mine reclamation permit or that are incorporated into a drainage facility or engineered as structural fill or slope. The specifications for soil amendment can be found in Reference Section 4A.

DRAFT

1.2.3.1 AREA-SPECIFIC FLOW CONTROL FACILITY REQUIREMENT

REQMT

Projects subject to Core Requirement #3 must provide flow control facilities as specified by the area-specific facility requirements and exceptions for the **designated flow control area** in which the proposed project or ***threshold discharge area*** of the proposed project is located as described in Subsections A, B, and C below.

Guide to Applying the Area-Specific Flow Control Facility Requirement

The flow control facility requirement varies across the county landscape according to the *flow control area* within which the project or a ***threshold discharge area*** of the project is located. Flow control areas are designated by the county to target the level of flow control performance to the broad protection needs of specific basins or subbasins. There are currently three such flow control areas, which are depicted on the Flow Control Applications Map adopted with this manual (see map pocket on inside of back cover). These are the **Basic Flow Control Areas**, **Conservation Flow Control Areas**, and **Flood Problem Flow Control Areas**. Each flow control area has an area-specific set of minimum flow control facility performance criteria, design assumptions, surfaces that must be mitigated, and exceptions. These provisions all comprise what is referred to as the "area-specific flow control facility requirement."

Note that the minimum required performance of the facility as specified by this requirement may need to be increased to ensure that downstream problems are not created or significantly aggravated as set forth in Section 1.2.2.2, "Problem-Specific Mitigation Requirements" (p. 1-27). Table 1.2.3.A (p. 1-31) provides a quick guide for selecting the flow control performance criteria necessary to meet both the area-specific flow control facility requirement and the problem-specific mitigation requirement. This is further explained in Step 4 below.

For efficient application of the flow control facility requirement, the following steps are recommended:

1. Check the Direct Discharge Exemption on Page 1-32 and the Impervious Surface Exemption on Page 1-33 to determine if and/or which portions of your project are exempt from the flow control facility requirement. If exempt from the flow control facility requirement, proceed to Step 6.
2. Use the Flow Control Applications Map to determine the flow control area in which your project is located. If this determination cannot be made from the map, a more detailed delineation of flow control areas is available on King County's Geographic Information System (GIS).
3. Consult the detailed requirement and exception language for the identified flow control area to determine if and how the flow control facility requirement applies to your project. This requirement and exception language is detailed on subsequent pages for each of the three flow control areas depicted on the Flow Control Applications Map. If a flow control facility is not applicable per the area-specific exceptions, proceed to Step 6.
4. If downstream problems were identified through offsite analysis per Core Requirement #2 and are proposed to be addressed through onsite flow control, use Table 1.2.3.A (p. 1-31) to determine if and what additional flow control performance is necessary to mitigate impacts (i.e., to prevent creation or aggravation of the identified problems).
5. Use Section 1.2.3.2 (p. 1-42) to identify the applicable requirements for implementing the flow control facility requirement. These requirements cover facility siting, analysis and design, unusual situations, and other site-specific considerations.
6. Use Section 1.2.3.3 (p. 1-47) to identify the flow control BMPs that must be applied to your ***project site*** regardless of whether a flow control facility is required.

TABLE 1.2.3.A
SUMMARY OF FLOW CONTROL PERFORMANCE CRITERIA ACCEPTABLE FOR IMPACT MITIGATION[1]

IDENTIFIED PROBLEM DOWNSTREAM	AREA-SPECIFIC FLOW CONTROL FACILITY REQUIREMENT		
	Basic Flow Control (FC) Areas	**Conservation FC Areas**	**Flood Problem FC Areas**
No Problem Identified Apply the minimum area-specific flow control performance criteria.	Apply the Level 1 flow control standard, which matches ***existing site conditions*** 2- and 10-year peaks	Apply the ***historic site conditions*** Level 2 flow control standard, which matches historic durations for 50% of 2-yr through 50-year peaks AND matches historic 2- and 10-year peaks	Apply the ***existing*** or ***historic site conditions*** Level 2 flow control standard (whichever is appropriate based on downstream flow control area) AND match ***existing site conditions*** 100-year peaks
Type 1 Drainage Problem ***Conveyance System Nuisance Problem***	Additional Flow Control Hold 10-year peak to overflow T_r peak[2][3]	*No additional flow control or other mitigation is needed*	*No additional flow control or other mitigation is needed*
Type 2 Drainage Problem ***Severe Erosion Problem***	Additional Flow Control Apply the ***existing site conditions*** Level 2 flow control standard[3][4]	*No additional flow control is needed, but other mitigation may be required*[4]	*No additional flow control is needed, but other mitigation may be required*[4]
Type 3 Drainage Problem ***Severe Flooding Problem***	Additional Flow Control Apply the ***existing site conditions*** Level 3 flow control standard to peak flows above the overflow T_r peak. If flooding is from a closed depression, make design adjustments as needed to meet the "special provision for closed depressions"[3][5]	Additional Flow Control Apply the ***historic site conditions*** Level 3 flow control standard. If flooding is from a closed depression, make design adjustments as needed to meet the "special provision for closed depressions"[3][5]	Additional Flow Control If flooding is from a closed depression, make design adjustments as needed to meet the "special provision for closed depressions" [3][5]
Potential Impact to Wetland Hydrology as Determined through a Critical Area Review per KCC 21A.24.100	Additional Flow Control DDES may require design adjustments per the wetland hydrology protection guidelines in Reference Section 5	Additional Flow Control DDES may require design adjustments per the wetland hydrology protection guidelines in Reference Section 5	Additional Flow Control DDES may require design adjustments per the wetland hydrology protection guide-lines in Reference Section 5

Notes:

(1) More than one set of problem-specific performance criteria may apply if two or more downstream problems are identified through offsite analysis per Core Requirement #2. If this happens, the performance goals of each applicable problem-specific criteria must be met. This can require extensive, time-consuming analysis to implement multiple sets of outflow performance criteria if additional onsite flow control is the only viable option for mitigating impacts to these problems. In these cases, it may be easier and more prudent to implement the ***historic site conditions*** Level 3 flow control standard in place of the otherwise required area-specific standard. Use of the historic Level 3 flow control standard satisfies the specified performance criteria for all the area-specific and problem-specific requirements except if adjustments are required per the special provision for closed depressions described below in Note 5.

(2) Overflow T_r is the return period of conveyance system overflow. To determine T_r requires a minimum Level 2 downstream analysis as detailed in Section 2.3.1.1. To avoid this analysis, a T_r of 2 years may be assumed.

(3) Offsite improvements may be implemented in lieu of or in combination with additional flow control as allowed in Section 1.2.2.2 (p. 1-26) and detailed in Section 3.3.5.

(4) A tightline system may be required regardless of the flow control standard being applied if needed to meet the discharge requirements of Core Requirement #1 (p. 1-21) or the outfall requirements of Core Requirement #4 (p. 1-51), or if deemed necessary by DDES where the risk of severe damage is high.

(5) **Special Provision for Closed Depressions with a Severe Flooding Problem:**
IF the proposed project discharges by overland flow or conveyance system to a closed depression experiencing a ***severe flooding problem*** AND the amount of ***new impervious surface*** area proposed by the project is greater than or equal to 10% of the 100-year water surface area of the closed depression, THEN use the "point of compliance analysis technique" described in Section 3.3.6 to verify that water surface levels are not increasing for the return frequencies at which flooding occurs, up to and including the 100-year frequency. If necessary, iteratively adjust onsite flow control performance to prevent increases. *Note: The point of compliance analysis relies on certain field measurements taken directly at the closed depression (e.g., soils tests, topography, etc.). If permission to enter private property for such measurements is denied, DDES may waive this provision and apply the* ***existing site conditions*** *Level 3 flow control standard with a mandatory 20% safety factor on the storage volume.*

DRAFT

❑ DIRECT DISCHARGE EXEMPTION

Any onsite **natural drainage area** is exempt from the flow control facility requirement if the area drains to one of the ***major receiving waters*** listed in Table 1.2.3.B at right, AND meets the following criteria for *direct discharge*[24] to that receiving water:

a) The **flowpath** from the ***project site*** discharge point to the edge of the 100-year floodplain of the major receiving water will be **no longer than a quarter mile**, except for discharges to Lake Sammamish, Lake Washington, and Puget Sound, AND

b) The conveyance system between the ***project site*** and the ***major receiving water*** will extend to the ordinary high water mark, and will be **comprised of manmade conveyance elements** (pipes, ditches, etc.) and will be within public right-of-way or a public or private drainage easement, AND

c) The conveyance system will have **adequate capacity**[25] per Core Requirement #4, Conveyance System, for the entire contributing drainage area, assuming **build-out conditions** to current zoning for the *equivalent area* portion (defined in Figure 1.2.3.A, below) and existing conditions for the remaining area, AND

d) The conveyance system will be adequately **stabilized to prevent erosion**, assuming the same basin conditions as assumed in Criteria (c) above, AND

e) The direct discharge proposal will not **divert flows** from or increase flows to an **existing wetland or stream** sufficient to cause a significant adverse impact.

TABLE 1.2.3.B
MAJOR RECEIVING WATERS

- Cedar River downstream of Taylor Creek confluence
- Green/Duwamish River below River Mile 6 (S. Boeing Access Road) ~~and above SR 18~~
- Snoqualmie River mainstem downstream of ~~(includes the North, South, and~~ Middle Fork Snoqualmie River confluence
- Middle Fork Snoqualmie River downstream of Rainy Creek confluence~~s)~~
- Sammamish River*
- White/Stuck River downstream of Huckleberry Creek confluence
- South Fork Skykomish River downstream of Tye and Foss River confluences
- ~~Tolt River~~
- Lake Sammamish
- Lake Washington
- Puget Sound

*Note: The **major receiving waters** listed above do not include side adjacent or associated channels, spring- or groundwater-fed streams, or wetlands.*

DRAFT

FIGURE 1.2.3.A EQUIVALENT AREA DEFINITION AND ILLUSTRATION

Equivalent area: The area tributary to a direct discharge conveyance system that is contained within an arc formed by the shortest, straight line distance from the conveyance system discharge point to the furthermost point of the proposed project.

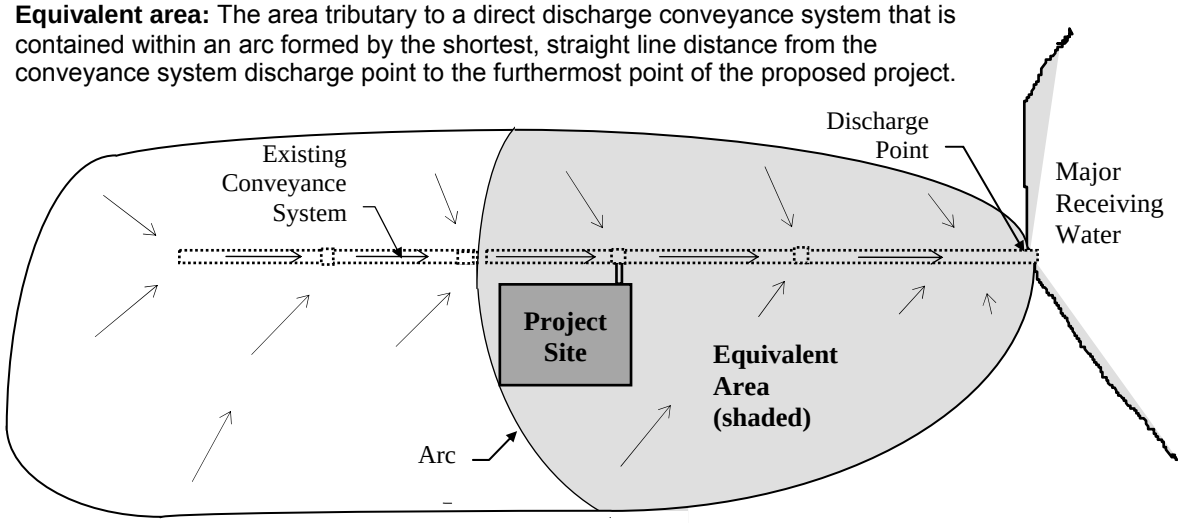

* *Projects discharging directly to the Sammamish River must infiltrate runoff to the extent feasible before discharge to the River.*

[24] *Direct discharge* means undetained discharge from a proposed project to a ***major receiving water***.

[25] *Note: If the conveyance system is an existing King County-owned system, the County may charge a special use fee.*

❑ IMPERVIOUS SURFACE PERCENTAGE EXEMPTION

Any onsite ***threshold discharge area*** is exempt from the flow control facility requirement if it meets all of the following conditions:

a) The amount of ***new impervious surface*** **plus existing impervious surface** that is **not** ***fully dispersed*** per the criteria on Page 1-43 must be no more than 4% of the ***threshold discharge area***, AND

b) The amount of ***new pervious surface*** must be no more than 15% of the natural drainage area, AND

c) Flow control BMPs must be applied to ***new impervious surface***s as specified in Section 1.2.3.3 (p. 1-47), AND

d) All impervious surface area, except 10,000 square feet of it, must be **set back** from its natural location of discharge from the ***site*** at least 100 feet for every 10,000 square feet of total impervious surface, AND

e) Increased runoff that is not ***fully dispersed*** from the ***new impervious surface*** and ***new pervious surface*** must not significantly impact a **critical area**, ***severe flooding problem***, or ***severe erosion problem***, AND

f) The **manner in which runoff is discharged** from the ***project site*** does not create a significant adverse impact per Core Requirement #1.

A. BASIC FLOW CONTROL AREAS

Basic Flow Control Areas are designated in two ways. Basic Flow Control Areas refer to areas that discharge to a closed conveyance system, which discharges eventually to water bodies that are designated as ***major receiving waters***. Basic Flow Control Areas are also designated by King County, with approval from the state Department of Ecology, where the County has determined that maintaining peak flows is sufficient to protect natural and constructed conveyance systems. ~~This designation~~ The latter method is usually based on the findings of a plan or study that has determined that such conveyance systems are not sensitive to development-induced increases in runoff volume and durations. Basic Flow Control Areas are delineated on the Flow Control Applications Map adopted with this manual (see map pocket on inside of back cover). A more detailed delineation is available on the County's Geographic Information System.

DRAFT

Note: For projects located at or near the delineated boundary of the Basic Flow Control Area, ***site****-specific topography or drainage information may be needed to determine whether a project or any* ***threshold discharge area*** *of a project is indeed within the flow control area. Any* ***threshold discharge area*** *is considered to be within the Basic Flow Control Area if the* ***threshold discharge area*** *drains to a waterbody or drainage system that is clearly within the mapped Basic Flow Control Area.*

REQMT

Within Basic Flow Control Areas, required flow control facilities must comply with the following minimum requirements for facility performance and mitigation of targeted surfaces, except where such requirements or the facility requirement itself is waived or reduced by the area-specific exceptions at the end of this subsection.

Minimum Required Performance

Facilities **in Basic Flow Control Areas** must comply with the following flow control performance standards and assumptions unless modified by offsite analysis per Core Requirement #2 (see Table 1.2.3.A, p. 1-31):

Level 1 Flow Control: Match the developed peak discharge rates to ***existing site conditions*** peak discharge rates for 2- and 10-year return periods.

Reduced Level 1 Flow Control: A modified version of this standard, controlling only the 10-year frequency peak flow rate, is allowed if the applicant demonstrates both of the following:

- The proposed ***project site*** discharges to a conveyance system not subject to erosion that extends from the project discharge point to one of the ***major receiving waters*** listed on Page 1-32, AND
- There is no evidence of capacity problems along this conveyance system as determined by offsite analysis per Core Requirement #2, or such problems will be resolved prior to project construction.

Intent

The Level 1 flow control standard is intended to protect flow-carrying capacity and limit increased erosion within the downstream conveyance system for runoff events less than or equal to the 10-year event. Matching the 2- and 10-year peak flows is intended to prevent increases in return-frequency peak flows less than or equal to the 10-year peak flow down to the 2-year peak flow. This level of control is also intended to prevent creation of new ***conveyance system nuisance problems*** as described in Section1.2.2.1.

Effectiveness in Addressing Downstream Drainage Problems

While the Level 1 flow control standard provides reasonable protection from many development-induced conveyance problems (up to the 10-year event), it does not prevent increases in runoff volumes or flow durations that tend to aggravate the three types of downstream problems described in Section 1.2.2.1. Consequently, if one or more of these problems are identified through offsite analysis per Core Requirement #2, additional onsite flow control and/or offsite improvements will likely be required (see "Problem-Specific Mitigation Requirements" in Section 1.2.2.2, p. 1-27).

DRAFT

Target Surfaces

Facilities **in Basic Flow Control Areas** must mitigate (either directly or in effect) the runoff from the following target surfaces within the ***threshold discharge area*** for which the facility is required:

1. ***New impervious surface*** that is **not *fully dispersed*** per the criteria on Page 1-43. For individual lots within residential subdivision projects, the extent of ***new impervious surface*** shall be assumed as specified in Chapter 3. *Note, any **new impervious surface** such as a bridge that spans the ordinary high water of a stream, pond, or lake may be excluded as a target surface if the runoff from such span is conveyed to the ordinary high water area in accordance with Criteria (b), (c), (d), and (e) of the "Direct Discharge Exemption" (p 1-32).*
2. ***New pervious surface*** that is **not *fully dispersed***. For individual lots within residential subdivision projects, the extent of ***new pervious surface*** shall be assumed to be the entire lot area, except the assumed impervious portion and any portion in which native conditions are preserved by covenant, tract, or easement. In addition, the ***new pervious surface*** on individual lots shall be assumed to be 100% grass if located within the Urban Growth Area (UGA) and 50% grass/50% pasture if located outside the UGA.

Exceptions

The following exceptions apply only **in Basic Flow Control Areas**:

1. The facility requirement in Basic Flow Control Areas is waived for any ***threshold discharge area*** in which the target surfaces subject to this requirement will generate no more than a **0.1-cfs increase** in the ***existing site conditions*** 100-year peak flow. *Note: for the purposes of this calculation, target surfaces served by flow control BMPs per Appendix C may be modeled in accordance with the flow control BMP facility sizing credits in Table 1.2.3.C (p. 1-44).*

2. The facility requirement in Basic Flow Control Areas may be waived for any ***threshold discharge area*** of a ***redevelopment project*** in which all of the following criteria are met:

   ~~a) The target surfaces subject to the Basic Flow Control Areas facility requirement will generate no more than a **0.4-cfs increase** in the ***existing site conditions*** 100-year peak flow for the ***threshold discharge area***, AND~~

   ~~b)~~a) The target surfaces subject to the Basic Flow Control Areas facility requirement will generate no more than a **0.1-cfs increase** in the ***existing site conditions*** 100-year peak flow at any ***natural discharge location*** from the ***project site*** (*note: for the purposes of this calculation, target surfaces served by flow control BMPs per Appendix C may be modeled in accordance with the flow control BMP facility sizing credits in Table 1.2.3.C, p. 1-44)*, AND

   ~~c)~~b) The increased runoff from target surfaces will not significantly impact a critical area, ***severe flooding problem***, or ***severe erosion problem***.~~, AND~~

   ~~d) The **manner in which runoff is discharged** from the ***project site*** does not create a significant adverse impact per Core Requirement #1.~~

~~3.The facility requirement in Basic Flow Control Areas may be waived for any ***threshold discharge area*** of a ***single family residential project*** **within the Urban Growth Area** if all of the following criteria are met:~~

   ~~a) The target surfaces subject to the Basic Flow Control Areas facility requirement will generate no more than a **0.4-cfs increase** in the ***existing site conditions*** 100-year peak flow for the ***threshold discharge area***, AND~~

   ~~b) The surrounding area within $^{1}/_{4}$ mile of the ***project site*** is over **75% built-out**[26] to the zoned density as of the year 1998, AND~~

   ~~c) The proposed project does not drain to a ***severe flooding problem*** or ***severe erosion problem***, AND~~

   ~~d) Any ***native vegetated surface*** assumed not to be converted for the purposes of computing the increase in 100-year peak flow must be preserved within a tract or by covenant as described in Appendix C, AND~~

   ~~e) The **manner in which runoff is discharged** from the ***project site*** does not create a significant adverse impact per Core Requirement #1.~~

DRAFT

[26] ~~*Percent build-out* is calculated by dividing the number of existing residential dwelling units (including existing multifamily units) by the total potential number of residential dwelling units as determined from current base zoning. The total potential number of residential dwelling units is defined as the sum of (1) existing residential dwelling units, (2) existing vacant non-subdividable single family residential lots, (3) potential single family residential lots (net buildable area of subdividable parcels multiplied by the base zoning, and subtracting out any lots with existing residential dwelling units), and (4) potential multifamily dwelling units on vacant or subdividable multifamily zoned parcels. Permanent open space areas (e.g., sensitive areas and buffers, recreational tracts) and those properties that are zoned commercial or industrial, or are publicly owned (e.g., parks, schools, arterial roadways, stormwater tracts) shall be excluded from these calculations.~~

~~4.The facility requirement in Basic Flow Control Areas may be waived by the DDES Land Use Services Division Manager/designee or Building Services Division Manager/designee using the procedures detailed in Sections 1.4.3 and 1.4.4 of the adjustment process, if all of the following criteria are met:~~

~~a) The catchment (defined as the tributary area to a point where the ***project site*** comprises 15% of the tributary area, or ¼ mile downstream, whichever is greatest) is over **90% built-out** to the zoned density, AND~~

~~b) Eighty percent of the existing development within the catchment was **constructed prior to 1979** (as determined from aerial photos) or is otherwise without formal flow control, AND~~

~~c) There are no **streams with salmonids** within ½ mile downstream of the ***project site*** (except streams designated as ***major receiving waters***), AND~~

~~d) There are no significant adverse impacts to **wetlands** within ½ mile downstream of the ***project site***, AND~~

~~e) There are no ***severe building flooding problems*** (see page 1-5) within 1 mile downstream of the ***project site***, AND~~

~~f) Undetained flows from the target surfaces subject to the Basic Flow Control Areas facility requirement will generate less than a 10% increase in the 10-year peak flows to a downstream ***conveyance system nuisance problem*** (see page 1-26).~~

B. CONSERVATION FLOW CONTROL AREAS

DRAFT

Conservation Flow Control Areas cover all of unincorporated King County except where the County has determined that control of flow durations and peaks to ***historic site conditions*** is not necessary to protect or allow for the restoration of water quality or habitat functions essential to salmonids. Conservation Flow Control Areas are the default designation until a County-approved plan or study has determined that natural and manmade conveyance systems within the area designated are not sensitive to development-induced increases in runoff volume and durations. Most Conservation Flow Control Areas are delineated on the Flow Control Applications Map adopted with this manual (see map pocket on inside of back cover). Any unincorporated areas of King County not shown on this map shall be assumed to be Conservation Flow Control Areas unless they drain entirely by non-erodible manmade conveyance to a ***major receiving water*** (listed on page 1-32), in which case they will be assumed to be Basic Flow Control Areas. A more detailed delineation of Conservation Flow Control Areas is available on the County's Geographic Information System.

*Note: For projects located at or near the delineated boundary of the Conservation Flow Control Area, **site-specific topography or drainage information may be needed to verify that a project or any threshold discharge area** of a project is within the flow control area. Any **threshold discharge area** is considered to be within the Conservation Flow Control Area if the **threshold discharge area** drains to a waterbody or drainage system that is clearly within the mapped Conservation Flow Control Area. However, any **threshold discharge area** that drains entirely by non-erodible manmade conveyance to a **major receiving water** (listed on page 1-32) may be assumed to be located within and subject to the facility requirements and exceptions of a Basic Flow Control Area.*

REQMT

Within Conservation Flow Control Areas, required flow control facilities must comply with the following minimum requirements for facility performance and mitigation of targeted surfaces, except where such requirements or the facility requirement itself is waived or reduced by the area-specific exceptions at the end of this subsection.

Minimum Required Performance

Facilities **in Conservation Flow Control Areas** must comply with the following flow control performance standard and assumptions unless modified by offsite analysis per Core Requirement #2 (see Table 1.2.3.A, p. 1-31):

Level 2 Flow Control: Match developed discharge durations to predeveloped durations for the range of predeveloped discharge rates from 50% of the 2-year peak flow up to the full 50-year peak flow. Also match developed peak discharge rates to predeveloped peak discharge rates for the 2- and 10-year return periods. Assume ***historic site conditions*** as the predeveloped condition.

Intent

The Level 2 flow control standard assuming ***historic site conditions*** is intended to limit the amount of time that erosive flows are at work generating erosion and sedimentation within natural and constructed drainage systems. Such control is effective in preventing development-induced increases in natural erosion rates and reducing existing erosion rates where they may have been increased by past development of the ***site***. This is accomplished by maintaining at historic predevelopment levels the aggregate time that developed flows exceed an erosion-causing threshold (i.e., 50% of the historic 2-year peak flow). Maintaining natural erosion rates within streams and their tributary areas is important for preventing increases in stream channel erosion and sediment loading that are detrimental to salmonid habitat and production.

Effectiveness in Addressing Downstream Drainage Problems

While the Level 2 flow control standard assuming ***historic site conditions*** provides a reasonable level of protection for preventing most development-induced problems, it does not necessarily prevent increases in ***existing site conditions*** 100-year peak flows that can aggravate ***severe flooding problems*** as described in Core Requirement #2, nor does it necessarily prevent aggravation of all ***severe erosion problems***. Consequently, if one or more of these problems are identified through offsite analysis per Core Requirement #2, additional onsite flow control and/or offsite improvements will likely be required (see "Problem-Specific Mitigation Requirements" in Section 1.2.2.2, p. 1-27).

DRAFT

Target Surfaces

Facilities **in Conservation Flow Control Areas**[27] must mitigate (either directly or in effect) the runoff from the following target developed surfaces within the ***threshold discharge area*** for which the facility is required:

1. ***New impervious surface*** that is **not** ***fully dispersed*** per the criteria on Page 1-43. For individual lots within residential subdivision projects, the extent of ***new impervious surface*** shall be assumed as specified in Chapter 3. *Note, any* ***new impervious surface*** *such as a bridge that spans the ordinary high water of a stream, pond, or lake may be excluded as a target surface if the runoff from such span is conveyed to the ordinary high water area in accordance with Criteria (b), (c), (d), and (e) of the "Direct Discharge Exemption" (p 1-32).*
2. ***New pervious surface*** that is **not** ***fully dispersed***. For individual lots within residential subdivision projects, the extent of ***new pervious surface*** shall be assumed to be the entire lot area, except the assumed impervious portion and any portion in which native conditions are preserved by covenant, tract, or easement. In addition, the ***new pervious surface*** on individual lots shall be assumed to be 100% grass if located within the Urban Growth Area (UGA) and 50% grass/50% pasture if located outside the UGA.

[27] *Note: Any* ***threshold discharge area*** *that appears to be located within a Conservation Flow Control Area according to the Flow Control Applications Map but drains entirely by non-erodible manmade conveyance to a* ***major receiving water*** *(listed on page 1-32) is considered to be located within a Basic Flow Control Area.*

3. **Existing impervious surface** added since January 8, 2001 that is **not *fully dispersed*** and not yet mitigated with a County-approved flow control facility or flow control BMP. *Note: January 8, 2001 is the effective date of the ESA 4(d) Rule for Puget Sound Chinook salmon.*

4. ***Replaced impervious surface*** that is **not *fully dispersed*** on a ***transportation redevelopment project*** in which ***new impervious surface*** is 5,000 square feet or more and totals 50% or more of the existing impervious surface within the project limits.

5. ***Replaced impervious surface*** that is **not *fully dispersed*** on a **parcel *redevelopment project*** in which the total of new plus ***replaced impervious surface*** is 5,000 square feet or more and whose valuation of proposed improvements (including interior improvements and excluding required mitigation improvements) exceeds 50% of the assessed value of the existing ***site*** improvements.

Exceptions

The following exceptions apply only **in Conservation Flow Control Areas**[27]:

1. The ***historic site conditions*** **assumption** for application of Level 2 flow control may be reduced through a basin plan or study approved by King County DNRP and the Washington State Department of Ecology. One possible reduction is to an assumption of 75% forest, 15% grass, and 10% impervious surface (75/15/10 conditions) or ***existing site conditions***, whichever generates the lowest 100-year peak flow. Another possible change that could be made through a County and Ecology approved basin plan or study is to the lowest peak flow (50% of the 2-year peak flow) above which discharge durations must be matched. This peak flow, known as the geomorphic threshold of bed load movement, may be changed based on the actual channel conditions necessary to protect or allow for restoration of water body beneficial uses and habitat functions essential to salmonids. ~~, if one of the following criteria are met:~~

   ~~a) The 75/15/10 or ***existing site conditions*** assumption was determined by a County-approved plan or study to be sufficient to protect or allow for restoration of habitat functions essential to salmonids, OR~~

   ~~b) At least 80% of the developable land in the stream basin in which the project is located was **developed prior to 1975** (enactment of the Clean Water Act) as determined from aerial photos.~~

2. The facility requirement in Conservation Flow Control Areas is waived for any ***threshold discharge area*** in which there is **no more than a 0.1-cfs difference** in the sum of developed 100-year peak flows for those target surfaces subject to this requirement and the sum of ***historic site conditions*** 100-year peak flows for the same surface areas. *Note: for the purposes of this calculation, target surfaces served by flow control BMPs per Appendix C may be modeled in accordance with the flow control BMP facility sizing credits in Table 1.2.3.C (p. 1-44).*

3. The facility requirement in Conservation Flow Control Areas may be reduced or waived for any ***threshold discharge area*** where a ~~**County-approved**~~ **plan or study** approved by the County and Ecology shows that a lower standard (e.g., Level 1 flow control) is sufficient or no facility is necessary to protect or allow for restoration of water body beneficial uses and habitat functions essential to salmonids.

4. The facility requirement in Conservation Flow Control Areas as applied to ***replaced impervious surface*** may be waived if the County has adopted a plan and implementation schedule approved by state Department of Ecology for fulfilling this requirement in **regional facilities**.

5. The facility requirement in Conservation Flow Control Areas as applied to ***replaced impervious surface*** may be ~~waived~~ reduced by the DDES Land Use Services Division Manager/designee or Building Services Division Manager/designee using the procedures detailed in Sections 1.4.3 and 1.4.4 of the adjustment process, if the **cost of ~~the~~ flow control ~~facility~~ facilities** to mitigate ~~these~~ all target surfaces exceeds that necessary to mitigate only for ***new impervious surface*** plus ***new pervious surface*** and also exceeds $^{1}/_{3}$ of the valuation of proposed improvements (including interior improvements) or twice the cost of a facility to mitigate ~~the same surfaces~~equivalent

DRAFT

surfaces on a new ***development site***, whichever is less. The amount of reduction shall be limited such that the **cost of flow control facilities** is at least equal to that necessary to mitigate only for ***new impervious surface*** plus ***new pervious surface***, and beyond this amount, is no greater than $^{1}/_{3}$ of the valuation of proposed improvements (including interior improvements) or twice the cost of a facility to mitigate equivalent surfaces on a new ***development site***, whichever is less.

C. FLOOD PROBLEM FLOW CONTROL AREAS

Flood Problem Flow Control Areas are designated by King County where the County has determined that a higher average level of flow control is needed to prevent aggravation of existing documented flooding problems. Such areas are delineated on the Flow Control Applications Map (located inside the back cover of this manual), and are also listed on the map by name of lake, wetland code number (from the *King County Wetlands Inventory*), or approximate address. A more detailed delineation of Flood Problem Flow Control Areas is available on the County's Geographic Information System.

Note: For projects located at or near the delineated boundary of the Flood Problem Flow Control Area, ***site****-specific topography or drainage information may be needed to verify that a project or any* ***threshold discharge area*** *of a project is within the flow control area. Any* ***threshold discharge area*** *is considered to be within the Flood Problem Flow Control Area if the* ***threshold discharge area*** *drains to a waterbody or drainage system that is clearly within the mapped Flood Problem Flow Control Area.*

REQMT

Within Flood Problem Flow Control Areas, required flow control facilities must comply with the following minimum requirements for facility performance and mitigation of targeted surfaces, except where such requirements or the facility requirement itself is waived or reduced by the area-specific exceptions at the end of this subsection.

DRAFT

Minimum Required Performance

Facilities **in Flood Problem Flow Control Areas** must comply with the following flow control performance standard and assumptions unless modified by offsite analysis per Core Requirement #2 (see Table 1.2.3.A, p. 1-31):

Level 3 Flow Control: Apply the Level 2 flow control standard, AND match the developed 100-year peak discharge rate to the predeveloped 100-year peak discharge rate. If the Flood Problem Flow Control Area is located within a Conservation Flow Control Area and does not drain entirely by non-erodible manmade conveyance to a ***major receiving water*** (listed on page 1-32), then ***historic site conditions*** shall be assumed as the predeveloped condition except for the purposes of matching 100-year peak discharge rates. For all other situations and for the purposes of matching 100-year peak discharge rates, ***existing site conditions*** may be assumed.

Intent

The Level 3 flow control standard is intended to prevent significant increases in existing water surface levels for 2-year through 100-year return frequencies. Such increases are expected to occur as the volume of runoff discharging to the water body is increased by upstream development. Because inflow rates to these water bodies are typically much higher than the outflow rates, increased runoff volumes from upstream development are, in effect, stacked on top of existing volumes in the water body, resulting in higher water surface levels. The duration-matching and 100-year peak-matching criteria of the Level 3 flow control standard counteract this stacking effect by slowing the arrival of additional runoff volumes. Because it can prevent significant aggravation of existing flooding, the Level 3 standard is also applicable to other flow control areas where ***severe flooding problems*** have been identified per Core Requirement #2.

Effectiveness in Addressing Downstream Drainage Problems

If the Level 3 flow control standard is implemented onsite, no additional measures are required to prevent aggravation of the three types of downstream problems described in Core Requirement #2. The one exception is for a wetland or lake that is a closed depression with a ***severe flooding problem***, and the proposed project is adding impervious surface area amounting to more than 10% of the 100-year water surface area of the closed depression. In this case, additional onsite flow control or offsite improvements may be necessary as determined by a "point of compliance analysis" (see "Special Provision for Closed Depressions" in Table 1.2.3.A (p. 1-31), and see Section 3.3.6, "Point of Compliance Analysis").

Target Surfaces

Facilities **in Flood Problem Flow Control Areas** must mitigate (either directly or in effect) the runoff from the following target developed surfaces within the ***threshold discharge area*** for which the facility is required:

1. If the Flood Problem Flow Control Area is **located within a Conservation Flow Control Area**, then the target surfaces are the same as those required for facilities in Conservation Flow Control Areas (see p. 1-36) unless otherwise allowed by the area-specific exceptions for Conservation Flow Control Areas. *Note: Any Flood Problem Flow Control Area that appears to be located within a Conservation Flow Control Area identified on the Flow Control Applications Map, but drains entirely by non-erodible manmade conveyance to a* ***major receiving water*** *(listed on page 1-32), is considered to be located within a Basic Flow Control Area.*
2. If the Flood Problem Flow Control Area is **located within a Basic Flow Control Area** or drains entirely by non-erodible manmade conveyance to a ***major receiving water***, then the target surfaces are the same as those required for facilities in Basic Flow Control Areas (see p. 1-33).

DRAFT

Exceptions

The following exceptions apply only **in Flood Problem Flow Control Areas**:

1. If the Flood Problem Flow Control Area **is located within a Conservation Flow Control Area**, then the facility requirement is waived for any ***threshold discharge area*** in which there is no more than a 0.1-cfs difference in the sum of developed 100-year peak flows for the target surfaces subject to this requirement and the sum of ***historic site conditions*** 100-year peak flows for the same surface areas. *Note: for the purposes of this calculation, target surfaces served by flow control BMPs per Appendix C may be modeled in accordance with the flow control BMP facility sizing credits in Table 1.2.3.C (p. 1-44). Also, any Flood Problem Flow Control Area that appears to be located within a Conservation Flow Control Area identified on the Flow Control Applications Map, but drains entirely by non-erodible manmade conveyance to a* ***major receiving water*** *(listed on page 1-32), is considered to be located within a Basic Flow Control Area.*
2. If the Flood Problem Flow Control Area **is located within a Basic Flow Control Area**, then the facility requirement is waived for any ***threshold discharge area*** in which the target surfaces subject to this requirement will generate no more than a 0.1-cfs increase in the ***existing site conditions*** 100-year peak flow. *Note: for the purposes of this calculation, target surfaces served by flow control BMPs per Appendix C may be modeled in accordance with the flow control BMP facility sizing credits in Table 1.2.3.C (p. 1-44).*
3. Any required application of the Flood Problem Flow Control Areas facility requirement to ***replaced impervious surface*** may be waived if the County has adopted a plan and implementation schedule approved by the state Department of Ecology for fulfilling this requirement with regional facilities.
4. Any required application of the Flood Problem Flow Control Areas facility requirement to ***replaced impervious surface*** may be ~~waived~~ reduced by the DDES Land Use Services Division Manager/designee or Building Services Division Manager/designee using the procedures detailed in Sections 1.4.3 and 1.4.4 of the adjustment process, if the **cost of ~~the~~ flow control ~~facility~~ facilities** to

mitigate ~~these~~ all target surfaces exceeds that necessary to mitigate only for ***new impervious surface*** plus ***new pervious surface*** and also exceeds $^1/_3$ of the valuation of proposed improvements (including interior improvements) or twice the cost of a facility to mitigate the same surfaces on a new ***development site***, whichever is less. The amount of reduction allowed by this exception shall be limited such that the **cost of flow control facilities** is at least equal to that necessary to mitigate only for ***new impervious surface*** plus ***new pervious surface***, and beyond this amount, is no greater than $^1/_3$ of the valuation of proposed improvements (including interior improvements) or twice the cost of a facility to mitigate equivalent surfaces on a new ***development site***, whichever is less.

5. Any required application of the Flood Problem Flow Control Areas facility requirement to ***replaced impervious surface*** may assume ***existing site conditions*** as the predeveloped condition for the purposes of matching the developed 100-year peak discharge rate to the predeveloped 100-year peak discharge rate.

DRAFT

1.2.3.2 FLOW CONTROL FACILITY IMPLEMENTATION REQUIREMENTS

Flow control facilities shall be designed and implemented in accordance with the following requirements, allowances, and flexible compliance provisions:

A. ONSITE VS. OFFSITE IMPLEMENTATION

All required flow control facilities must be implemented onsite except where the requirements below can be met by direct discharge to a regional or shared facility constructed to provide flow control for the proposed project. Regional facilities are typically constructed as part of a County-approved plan or study (e.g., basin plan, stormwater compliance plan, or master drainage plan). Shared facilities may be constructed under a County-developed shared facility drainage plan or under an agreement between two or more private developers.

1. The regional or shared facility must be of adequate size and design to meet the **current** flow control requirements for the proposed project. *Note: the current flow control requirements are those specified by Core Requirement #3 of this manual unless superseded by other adopted area-specific flow control requirements per Special Requirement #1 (see Section 1.3.1).* In some cases where the current flow control requirements differ from those used to originally design the regional or shared facility, additional analysis and possible retrofitting of the facility may be required to ensure adequate size and design. In other cases where the current flow control requirements are not significantly different or are less stringent, adequate size and design may already be documented by an adopted King County basin plan or master drainage plan, an approved shared facility drainage plan, or a detailed drainage analysis approved by the County for a separate permitted development.
2. The regional or shared facility must be fully operational at the time of construction of the proposed project. In the case of a shared facility, the proposed project must comply with the terms and conditions of all contracts, agreements, and permits associated with the shared facility. If the offsite facility is an existing King County-owned facility, the County may charge a special use fee equal to or based on the property value of the detention capacity being used.
3. The conveyance system between the ***project site*** and the regional facility must meet the same criteria specified for direct discharge to a ***major receiving water*** except for Criterion (a) (see "Direct Discharge Exemption" on page 1-32). In the case of a shared facility, the criteria are the same, except the conveyance system need only have adequate capacity and erosion protection for buildout of the *participating portion*[28] of the contributing drainage area.

DRAFT

B. METHODS OF ANALYSIS AND DESIGN

Flow control facilities must be analyzed and designed using a continuous flow simulation method such as HSPF (Hydrologic Simulation Program FORTRAN) or the simplified HSPF-based runoff files method. Specifications for use of the runoff files method and associated computer program, KCRTS, are found in Chapter 3. Detailed design specifications for flow control facilities are found in Chapter 5.

C. SIZING CREDITS FOR FULLY DISPERSED SURFACES

A ***fully dispersed*** surface (either impervious or non-native pervious) is one that conforms to the BMP strategy for "full dispersion" detailed in Appendix C, Section C.2.1. This strategy calls for minimizing the area of onsite developed surface relative to ***native vegetated surface***, together with the application of dispersion techniques that utilize the natural retention/detention capacity of the ***native vegetated surface*** to mitigate the runoff effects of the developed surfaces. Developed surfaces conforming to this strategy are considered to have a negligible impact downstream, and therefore, may be modeled as forest and are not subject to the area-specific flow control facility requirement (Section 1.2.3.1) or the area-specific water quality facility requirement (Section 1.2.8.1). In order for developed surfaces to qualify as ***fully***

[28] The *participating portion* includes those properties that have agreements for use of the shared facility.

dispersed, they must meet the basic criteria listed below and further detailed in Appendix C, Section C.2.1.

Criteria for Fully Dispersed Surfaces

1. The **total area of impervious surface** being ***fully dispersed*** must be no more than 15% of the total area of ***native vegetated surface*** being preserved by a clearing limit per KCC 16.82 or by recorded tract, easement, or covenant within the same ***threshold discharge area***. The total area of impervious surface plus *non-native pervious surface*[29] being ***fully dispersed*** must be no more than 35% of a ***threshold discharge area***.

2. The runoff from a ***fully dispersed*** surface must be discharged using one of the following **dispersion devices** in accordance with the design specifications and maximum area of ***fully dispersed*** surface for each device set forth in Appendix C, Section C.2.1:

   a) **Splash blocks**

   b) **Rock pads**

   c) **Gravel filled trenches**

   d) **Sheet flow**

   Note: The dispersion device must be situated so as to discharge within the same ***threshold discharge area*** *of the surface it serves.*

3. A **native vegetated flowpath segment** of at least 100 feet in length (25 feet for sheet flow from a non-native pervious surface) must be available along the flowpath that runoff would follow upon discharge from a dispersion device listed in Minimum Requirement 2 above. The native vegetated flowpath segment **must meet all of the following criteria:**

   a) The flowpath segment must be over ***native vegetated surface***.

   b) The flowpath segment must be **onsite or an offsite tract or easement area** reserved for such dispersion.

   c) The **slope** of the flowpath segment must be **no steeper than 15%** for any 20-foot reach of the flowpath segment.

   d) The flowpath segment must be located **between the dispersion device and any downstream drainage feature** such as a pipe, ditch, stream, river, pond, lake, or wetland.

   e) The flowpath segments for adjacent dispersion devices must comply with the **minimum spacing requirements** in Appendix C, Section C.2.~~2~~1. These requirements do not allow overlap of flowpath segments, except in the case where **sheet flow from a non-native pervious surface** overlaps with the flowpath of any dispersion device listed in Minimum Requirement 2 above. In this case, the longest of the two overlapping flowpath segments must be extended at least 1 foot for every 3 feet of distance along the most representative path that runoff would travel from the upstream end to the discharge end of the non-native pervious surface.

4. On ***sites*** **with septic systems**, the discharge of runoff from dispersion devices must not be upgradient of the drainfield. This requirement may be waived by DDES if ***site*** topography clearly prohibits flows from intersecting the drainfield.

5. The dispersion of runoff must not create **flooding or erosion impacts** as determined by DDES. If runoff is proposed to be discharged toward a ***landslide hazard area***, ***erosion hazard area***, ***or steep slope hazard area*** (i.e., slopes steeper than 20%), DDES may require the applicant to have the proposal evaluated by a geotechnical engineer, engineering geologist, or the DDES staff geologist.

DRAFT

[29] *Non-native pervious surface* means a pervious surface that does not meet the definition of a ***native vegetated surface***.

D. SIZING CREDITS FOR USE OF FLOW CONTROL BMPS

When sizing flow control facilities and assessing exceptions from the flow control facility requirement, target impervious surfaces served by a flow control BMP that meets the design specifications for that BMP in Appendix C and the requirements for use of BMP credits in Section 5.2.2 may be modeled as specified in Table 1.2.3.C below.

TABLE 1.2.3.C FLOW CONTROL BMP FACILITY SIZING CREDITS(1)

Flow Control BMP Type	Facility Sizing Credit
Full dispersion	Model fully dispersed surface as forest
Full infiltration(2)	Subtract impervious area that is fully infiltrated
Limited infiltration	Model tributary impervious surface as 50% impervious, 50% grass
Basic dispersion	Model dispersed impervious surface as 50% impervious, 50% grass
Rain garden	Model tributary impervious surface as 50% impervious, 50% grass
Permeable pavement (non-grassed)	Model permeable pavement area as 50% impervious, 50% grass
Grassed modular grid pavement	Model permeable pavement as all grass
Rainwater harvesting	Subtract area that is fully controlled
Vegetated roof	Model vegetated roof area as 50% impervious, 50% grass
Restricted footprint	Model footprint as restricted
Wheel strip driveways	Model credited area as 50% impervious, 50% grass
Minimum disturbance foundation	Model foundation area as 50% impervious, 50% grass
Open grid decking over pervious area	Model deck area as 50% impervious, 50% grass
Native growth retention credit	Model mitigated impervious area as 50% impervious, 50% grass
Perforated pipe connection	None

Notes:

(1) These credits do not apply when determining eligibility for exemptions from Core Requirement #3 or exceptions from the flow control facility requirement unless otherwise noted in the exemption or exception.

(2) For any project subject to Small Project Drainage Review, and for any single family residential project subject to Full or Large Project Drainage Review, the design requirements and specifications in Appendix C, Section C.2.2 may be used for design of full infiltration. For all other projects, full infiltration must be designed in accordance with infiltration facility standards in Section 5.4.

DRAFT

E. MITIGATION OF TARGET SURFACES THAT BYPASS FACILITY

On some ***sites***, topography may make it difficult or costly to collect all target surface runoff for discharge to the onsite flow control facility. Therefore, some project runoff subject to flow control may bypass required onsite flow control facilities provided that all of the following conditions are met:

1. The **point of convergence** for runoff discharged from the bypassed target surfaces and from the project's flow control facility must be within **a quarter-mile downstream**[30] of the facility's ***project site*** discharge point, AND
2. The increase in the ***existing site conditions*** **100-year peak discharge** from the area of bypassed target surfaces must not exceed 0.4 cfs, AND
3. Runoff from the bypassed target surfaces **must not create a significant adverse impact** to downstream drainage systems, salmonid habitat, or properties as determined by DDES, AND
4. **Water quality requirements** applicable to the bypassed target surfaces must be met, AND

[30] Note: DDES may allow this distance to be extended beyond a quarter mile to the point where the ***project site*** area constitutes less than 15% of the tributary area.

5. **Compensatory mitigation by a flow control facility** must be provided so that the net effect at the point of convergence downstream is the same with or without the bypass. This mitigation may be waived if the ***existing site conditions*** 100-year peak discharge from the area of bypassed target surfaces is increased by no more than 0.1 cfs and **flow control BMPs** as detailed in Appendix C are applied to all impervious surfaces within the area of bypassed target surfaces. One or combination of the following methods may be used to provide compensatory mitigation by a flow control facility subject to permission/approvals from other parties as deemed necessary by DDES:

   a) Design the project's flow control facility or retrofit an existing offsite flow control facility as needed to achieve the desired effect at the point of convergence, OR

   b) Design the project's flow control facility or provide/retrofit an offsite flow control facility to mitigate an existing developed area (either onsite or offsite) that has runoff characteristics (i.e., peak flow and volume) equivalent to those of the bypassed target surfaces but is currently not mitigated or required to be mitigated to the same flow control performance requirement as the bypassed target surfaces.

F. BYPASS OF RUNOFF FROM NON-TARGET SURFACES

The performance of flow control facilities can be compromised if the contributing area, beyond that which must be mitigated by the facility, is too large. Therefore, IF the existing 100-year peak flow rate from any upstream area (not targeted for mitigation) is greater than 50% of the 100-year developed peak flow rate (undetained) for the area that must be mitigated, THEN the runoff from the upstream area must bypass the facility. The bypass of upstream runoff must be designed so that all of the following conditions are met:

1. Any existing contribution of flows to an **onsite wetland** must be maintained, AND
2. Upstream flows that are **naturally attenuated** by natural detention on the ***project site*** under predeveloped conditions must remain attenuated, either by natural means or by providing additional onsite detention so that peak flows do not increase, AND
3. Upstream flows that are **dispersed or unconcentrated** on the ***project site*** under predeveloped conditions must be discharged in a safe manner as described in Core Requirement #1 under "Discharge Requirements" (p. 1-21).

DRAFT

G. MITIGATION TRADES

A project's flow control facility may be designed to mitigate an existing developed non-target surface area (either onsite or offsite) in trade for not mitigating part or all of the project's target surface area, provided that all of the following conditions are met:

1. The **existing developed non-target surface area** (i.e., an area of existing impervious surface and/or non-native pervious surface) must have runoff discharge characteristics (i.e., peak flow and volume) equivalent to those of the target surface area for which mitigation is being traded and must not be currently mitigated to the same flow control performance requirement as the target surface area, AND
2. Runoff from both the target surface area being traded and the flow control facility **must converge prior to discharge** of the runoff from the target surface area being traded onto private property without an easement or through any area subject to erosion, AND
3. The **net effect** in terms of flow control at the point of convergence downstream must be the same with or without the mitigation trade, AND
4. The undetained runoff from the target surface area being traded **must not create a significant adverse impact** to downstream drainage systems, salmonid habitat, or properties prior to convergence with runoff from the flow control facility.

H. MANIFOLD DETENTION FACILITIES

A *manifold detention facility* is a single detention facility designed to take the place of two or more otherwise required detention facilities. It combines the runoff from two or more onsite drainage areas

having separate ***natural discharge locations***, and redistributes the runoff back to the ***natural discharge locations*** following detention. Because manifold detention facilities divert flows from one ***natural discharge location*** to another and then back, they are not allowed except by an approved adjustment (see Section 1.4).

I. FACILITY REQUIREMENT IN LANDSLIDE HAZARD DRAINAGE AREAS

Proposed projects subject to Discharge Requirement 2 in Core Requirement #1 (see p. 1-22) must provide a tightline system unless the 100-year runoff from the ***project site*** can be feasibly infiltrated or one of the other exceptions listed on page 1-22 apply. For infiltration to be used as an alternative to the tightline requirement, it must be feasible per the facility design requirements and limitations specified in Section 5.4. When evaluating the feasibility of infiltration, multiple facility locations scattered throughout the ***project site*** shall be considered and used where feasible and practical to avoid concentrating infiltrated water in one location. If multiple facilities are not feasible or practical, then a single infiltration facility meeting the minimum setback requirements in Section 5.4 may be used where feasible.

Where infiltration is not feasible, it is still possible for a proposed project to qualify for one of the other exceptions to the tightline requirement specified in Core Requirement #1 (p. 1-22). If such a project is subject to the flow control facility requirement in Core Requirement #3, the required facility must be a **detention pond** sized to meet, at minimum, the ***historic site conditions*** Level 2 flow control facility standard with a safety factor of 20% applied to the storage volume. The detention pond must be sited and designed so as to maximize the opportunity for infiltration in the pond. To accomplish this, all of the following design requirements must be met:

1. The detention pond must be preceded by either a water quality treatment facility per Core Requirement #8 or a presettling basin per Section 5.4, AND
2. All detention pond side slopes must be 3H:1V or flatter and must be earthen, AND
3. Detention pond liners that impede infiltration shall not be used, AND
4. The pond bottom shall be at or above the seasonal high groundwater table, AND
5. The detention pond outflow must meet the discharge dispersal requirements specified in Discharge Requirement 1 of Core Requirement #1 (p. 1-21).

DRAFT

1.2.3.3 FLOW CONTROL BMPS REQUIREMENT

REQMT

Projects subject to Core Requirement #3 must apply **flow control BMPs** to impervious surfaces as directed by this section to either supplement the flow mitigation provided by required flow control facilities or provide flow mitigation where flow control facilities are not required. Flow control BMPs must be selected and applied according to the basic requirements, procedures, and provisions detailed in Section 5.2 and the design specifications for each BMP in Appendix C, Section C.2.

Flow control BMPs are methods and designs for dispersing, infiltrating, or otherwise reducing or preventing development-related increases in runoff at or near the sources of those increases. Flow control BMPs include, but are not limited to, preservation and use of ***native vegetated surfaces*** to fully disperse runoff; use of other pervious surfaces to disperse runoff; roof downspout infiltration; permeable pavements; rainwater harvesting; vegetated roofs; and reduction of development footprint.

Intent: To provide mitigation of hydrologic impacts that are not possible/practical to mitigate with a flow control facility. Such impacts include increases in runoff volumes and flashiness and decreases in groundwater recharge. Increased runoff volume and flashiness leads to higher and more variable stream velocities at low flows and more frequent water level fluctuations in streams and wetlands. This causes wash-out and stranding of aquatic species, algal scour and washout of organic matter, loss of vegetation diversity and habitat quality, and disruption of cues for spawning, egg hatching, and migration. Decreased groundwater recharge reduces water supply for human use and summer base flows in streams, which is critical to water temperature, salmonid use of smaller streams, and the habitat quality of mainstem side channels and wetlands used for spawning, rearing, and flood refuge. Flow control BMPs seek to reduce runoff volumes and flashiness and increase groundwater recharge by reducing imperviousness and making use of the pervious portions of ***development sites*** to maximize infiltration and retention of stormwater onsite. Thus, the goal is to apply flow control BMPs to ***new*** and ~~existing~~ ***replaced*** ***impervious surfaces*** to the maximum extent practicable without causing flooding or erosion impacts. The minimum levels of application specified in Section 5.2 are considered by the County to be a maximum extent practicable level based on best available information regarding the effectiveness of these BMPs versus their cost.

DRAFT

❑ INFILTRATION FACILITY EXEMPTION

Any impervious surface served by an infiltration facility designed in accordance with the flow control facility requirement (Section 1.2.3.1), the facility implementation requirements (Section 1.2.3.2), and the design criteria for infiltration facilities (Section 5.4) is exempt from the flow control BMPs requirement.

❑ IMPLEMENTATION OF THIS REQUIREMENT

For **non-subdivision projects making improvements on an individual *site*/lot**, implementation of this requirement shall be in accordance with the "Individual Lot BMP Requirements" in Section 5.2.1, which specify the selection of BMPs and the extent of their application to the impervious surfaces of the ***site*/lot**. This required implementation of flow control BMPs must occur as part of the proposed project and provisions must be made for their future maintenance as specified in Section 5.2.1.

For **subdivision projects** or **projects within rights-of-way** (e.g., road improvements), implementation of this requirement is incentive-based. In other words, implementation is achieved by giving credits for the application of flow control BMPs per Table 1.2.3.C (p. 1-44). As allowed in Sections 1.2.3 and 1.2.8, these credits may be used to reduce the size of a required flow control facility, qualify for a flow control facility exception or bypass of target surfaces, or reduce the target surfaces subject to flow control or water quality facility requirements. To use these credits, flow control BMPs must be implemented as part of the proposed project and provisions must be made for their future maintenance as specified in Section 5.2.2. For subdivision projects proposing to take credit for future implementation of BMPs on individual lots, provisions must be made to assure their implementation as specified in Section 5.2.2.1.

1.2.4 CORE REQUIREMENT #4: CONVEYANCE SYSTEM

REQUIREMENT

All engineered conveyance system elements for proposed projects must be analyzed, designed, and constructed to provide a minimum level of protection against overtopping, flooding, erosion, and structural failure as specified in the following groups of requirements:

- "Conveyance Requirements for New Systems," Section 1.2.4.1 (below)
- "Conveyance Requirements for Existing Systems," Section 1.2.4.2 (p. 1-49)
- "Conveyance System Implementation Requirements," Section 1.2.4.3 (p. 1-50)

Intent: To ensure proper design and construction of engineered conveyance system elements. *Conveyance systems* are natural and engineered drainage facilities that collect, contain, and provide for the flow of surface and storm water. This core requirement applies to the engineered elements of conveyance systems—primarily pipes, culverts, and ditches/channels.

1.2.4.1 CONVEYANCE REQUIREMENTS FOR NEW SYSTEMS

All *new conveyance system elements*,[31] both onsite and offsite, shall be analyzed, designed, and constructed according to the following requirements. Also see Section 4.1 for route design and easement requirements.

Pipe Systems

1. New pipe systems shall be designed with sufficient capacity to convey and contain (at minimum) the 25-year peak flow, assuming developed conditions for onsite tributary areas and existing conditions for any offsite tributary areas.
2. Pipe system structures may overtop for runoff events that exceed the 25-year design capacity, provided the overflow from a 100-year runoff event does not create or aggravate a ***severe flooding problem*** or ***severe erosion problem*** as described in Core Requirement #2, Section 1.2.2 (p. 1-31). Any overflow occurring onsite for runoff events up to and including the 100-year event must discharge at the natural location for the ***project site***. In residential subdivisions, this overflow must be contained within an onsite drainage easement, tract, covenant, or public right-of-way.
3. The upstream end of a pipe system that receives runoff from an open drainage feature (pond, ditch, etc.) shall be analyzed and sized as a culvert as described below.

Culverts

1. New culverts shall be designed with sufficient capacity to meet the headwater requirements in Section 4.3.1 and convey (at minimum) the 25-year peak flow, assuming developed conditions for onsite tributary areas and existing conditions for any offsite tributary areas.
2. New culverts must also convey as much of the 100-year peak flow as is necessary to preclude creating or aggravating a ***severe flooding problem*** or ***severe erosion problem*** as described in Core Requirement #2, Section 1.2.2 (p. 1-31). Any overflow occurring onsite for runoff events up to and including the 100-year event must discharge at the natural location for the ***project site***. In residential subdivisions, this overflow must be contained within an onsite drainage easement, tract, covenant, or public right-of-way.
3. New culverts proposed in streams with salmonids shall be designed to provide for fish passage as detailed in Section 4.3.2. *Note: The County's critical areas regulations (KCC 21A.24) or the State Department of Fish and Wildlife may require a bridge to facilitate fish passage.*

[31] *New conveyance system elements* are those that are proposed to be constructed where there are no existing constructed conveyance elements.

DRAFT

Ditches/Channels

1. New ditches/channels shall be designed with sufficient capacity to convey and contain, at minimum, the 25-year peak flow, assuming developed conditions for onsite tributary areas and existing conditions for any offsite tributary areas.
2. New ditches/channels must also convey as much of the 100-year peak flow as is necessary to preclude creating or aggravating a ***severe flooding problem*** or ***severe erosion problem*** as described in Core Requirement 2, Section 1.2.2 (p. 1-31). Any overflow occurring onsite for runoff events up to and including the 100-year event must discharge at the natural location for the ***project site***. In residential subdivisions, such overflow must be contained within an onsite drainage easement, tract, covenant, or public right-of-way.

Tightline Systems Traversing Steep Slopes

New tightline conveyance systems traversing slopes that are steeper than 15% and greater than 20 feet in height, or are within a ***steep slope hazard area*** as defined in KCC 21A.06, shall be designed with sufficient capacity to convey and contain (at minimum) the 100-year peak flow, assuming *full build-out conditions*[32] for all tributary areas, both onsite and offsite. Tightline systems shall be designed as detailed in Section 4.2.2.

Bridges

New bridges shall be designed to accommodate the 100-year peak flow as specified in Section 4.3.3 and in accordance with the floodplain development standards in KCC 21A.24.

DRAFT

1.2.4.2 CONVEYANCE REQUIREMENTS FOR EXISTING SYSTEMS

The following conveyance requirements for existing systems are less rigorous than those for new systems to allow some salvaging of existing systems that are in useable condition. Existing systems may be utilized if they are capable of providing a minimum level of protection as-is or with minor modifications.

Existing Onsite Conveyance Systems

No Change in Flow Characteristics: Existing onsite conveyance systems that will not experience a change in flow characteristics (e.g., peak flows or volume of flows) as a result of the proposed project need not be analyzed for conveyance capacity.

Change in Flow Characteristics: Existing onsite conveyance systems that will experience a change in flow characteristics as a result of the proposed project must comply with the following conveyance requirements:

1. The existing system must be analyzed and shown to have sufficient capacity to convey and contain (at minimum) the 10-year peak flow assuming developed conditions for onsite tributary areas and existing conditions for any offsite tributary areas.
2. The applicant must demonstrate that the 100-year peak flow to the existing system will not create or aggravate a ***severe flooding problem*** or ***severe erosion problem*** as described in Core Requirement #2, Section 1.2.2 (p. 1-31).
3. Minor modifications may be made to the conveyance system to achieve the required capacity stated above. Examples of minor modifications include raising a catch-basin rim, replacing or relaying a section of pipe to match the capacity of other pipes in the system, improving a pipe inlet, or enlarging a short, constricted reach of ditch or channel.

[32] *Full build-out conditions* means the tributary area is developed to its full zoning potential except where there are existing sensitive areas, open space tracts, and/or native growth protection easements/covenants.

4. Modifications to an existing conveyance system or element that acts to attenuate peak flows, due to the presence of detention storage upstream, shall be made in a manner that does not significantly increase peak flows downstream. For example, if water is detained in a pond upstream of a restrictive road culvert, then installing an overflow system for the culvert should prevent overtopping of the road without significantly reducing existing detention storage.

Existing Offsite Conveyance Systems

1. Existing offsite conveyance systems need not be analyzed for conveyance capacity except as required by Core Requirement #2, or if offsite improvements or direct discharge are proposed per Core Requirement #3.
2. Improvements made to existing offsite conveyance systems to address the problem-specific mitigation requirements in Section 1.2.2.2 (p. 1-27) need only change existing conveyance capacity sufficient to prevent aggravation of the drainage problem(s) being addressed.
3. Existing offsite conveyance systems proposed to be used for direct discharge to a ***major receiving water*** per Core Requirement #3 (p. 1-32) shall meet the same conveyance requirements specified in Section 1.2.4.1 (p. 1-48) for new systems.

1.2.4.3 CONVEYANCE SYSTEM IMPLEMENTATION REQUIREMENTS

Conveyance systems shall be designed and implemented in accordance with the following requirements, allowances, and flexible compliance provisions:

DRAFT

A. METHODS OF ANALYSIS AND DESIGN

Properly sized conveyance elements provide sufficient hydraulic capacity to convey peak flows of the return frequencies indicated in Sections 1.2.4.1 and 1.2.4.2. Conveyance capacity shall be demonstrated using the methods of analysis detailed in Chapter 4. Design flows for sizing conveyance systems shall be determined using the appropriate runoff computation method specified in Section 3.2.

B. COMPOSITION

Where feasible, conveyance systems shall be constructed of vegetation-lined channels, as opposed to pipe systems. Vegetative channels shall generally be considered feasible if all of the following conditions are present:

1. The channel gradient generally does not exceed 5 percent, AND
2. No modifications to currently adopted standard roadway cross sections in the *King County Road Standards* are necessitated by the channel, AND
3. The channel will be accessible for maintenance (see Section 1.2.6), AND
4. The channel will not be subject to erosion.

Exceptions: The following are exceptions to the requirement for vegetative channels*:*

- Conveyance systems proposed under roadways, driveways, or parking areas
- Conveyance systems proposed between houses in urban-zoned plats and short plats
- Conveyance systems conveying roof runoff only.

C. INTERFLOW AND INTERCEPTION

Interflow is near-surface groundwater that moves laterally through the soil horizon following the hydraulic gradient of underlying relatively impermeable soils. When interflow is expressed on the surface, it is termed a *spring* or *seepage*. Any significant springs or seepage areas that impact a roadway or structure

proposed by the project must be intercepted and directed into a conveyance system. Where roadways may impede the passage of interflow to downstream wetlands or streams, provision for passage of unconcentrated flows must be made.

D. PROVISION FOR LOT DRAINAGE WITHIN SUBDIVISIONS

Within *subdivision projects*,[33] provision must be made for the safe conveyance of runoff from the discharge location of each lot to the subdivision's main conveyance system or road drainage system. This may include, but is not limited to, **provisional stub-outs** from an enclosed roadway drainage system to the edge of the road right-of-way at each created lot, or lot-line pipes or ditches that collect lot drainage and convey it to the subdivision's main conveyance system or road drainage system.

E. OUTFALLS

An *outfall* is defined as a point where collected and concentrated surface and storm water runoff is discharged from a pipe system or culvert.

Energy Dissipation: At a minimum, rock erosion protection is required at outfalls from all drainage systems and elements except where DDES determines that erosion protection is being provided by other means or is not needed. Details on outfall structures are included in Section 4.2.2.

New Point Discharges Over Steep Slopes: Proposed outfalls that will discharge runoff in a location where the natural (existing) discharge is unconcentrated over a slope steeper than 15% and greater than 20 feet in height, or over a ***steep slope hazard area*** (as defined in KCC 21A.06), must meet the following criteria:

1. IF the 100-year peak discharge is less than or equal to 0.2 cfs[34] under existing conditions and will remain less than or equal to 0.2 cfs under developed conditions, THEN outfall runoff may be discharged onto a rock pad shaped to disperse flow. The outfall and rock pad must be located upstream from any ***landslide*** or ***steep slope hazard area*** buffer and no less than 50 feet from the top of a ***steep slope hazard area*** unless otherwise approved by DDES based on an evaluation/report by a geotechnical engineer.
2. IF the 100-year peak discharge is greater than 0.2 cfs but less than or equal to 0.5 cfs under existing conditions and will remain less than or equal to 0.5 cfs under developed conditions, THEN runoff must be conveyed to a dispersal trench or other dispersal system. The dispersal trench or system must be located upstream from any ***landslide*** or ***steep slope area*** buffer and no less than 50 feet from the top of a ***steep slope hazard area*** unless otherwise approved by DDES based on an evaluation/report by a geotechnical engineer.
3. IF the 100-year peak discharge is greater than 0.5 cfs for either existing or developed conditions, THEN a tightline conveyance system must be constructed to convey the runoff to the bottom of the slope unless other measures are approved by DDES based on an evaluation/report by a geotechnical engineer. Tightline systems must be designed so that existing baseflow conditions are not significantly changed and adequate energy dissipation is provided at the bottom of the slope.

F. OUTFALLS TO THE GREEN RIVER

New stormwater outfalls or modifications to existing stormwater outfalls discharging to the Green River between River Mile 6 (South Boeing Access Road) and SR 18 are allowed *only* through the adjustment process. These outfalls must comply with requirements of the *Green River Pump Operations Procedure Plan*, which establishes storage volumes and release rate criteria for developments proposing to ***construct or modify*** outfalls. Copies of the plan are available from DNRP.

[33] For purposes of this requirement, the term *subdivision project* refers to any project that creates a short plat, plat, or binding site plan.

[34] Peak discharges shall be as computed using KCRTS as detailed in Chapter 3.

DRAFT

G. SPILL CONTROL PROVISIONS

Projects proposing to construct or replace onsite conveyance system elements that receive runoff from non-roof-top ***pollution-generating impervious surface*** must provide a spill control device as detailed in Section 4.2.1 prior to discharge from the ***project site*** or into a *natural onsite drainage feature.*[35] More specifically, this requirement applies whenever a proposed project does either of the following:

- Constructs a new onsite conveyance system that receives runoff from non-roof-top ***pollution-generating impervious surface***, OR
- Removes and replaces an existing onsite conveyance system element that receives runoff from 5,000 square feet or more of non-roof-top ***pollution-generating impervious surface*** onsite.

The intent of this device is to temporarily detain oil or other floatable pollutants before they enter the downstream drainage system in the event of an accidental spill or illegal dumping. It may consist of a tee section in a manhole or catch basin, or another alternative as specified in Section 4.2.1.

H. GROUNDWATER PROTECTION

Any reach of new ditch or channel proposed by a project in which the untreated runoff from 5,000 square feet or more of ***pollution-generating impervious surface*** comes into direct contact with an outwash soil must be lined with either a **low permeability liner** or a **treatment liner** consistent with the specifications for such liners in Section 6.2.4, except where it can be demonstrated that the soil has the following properties that reduce the risk of groundwater contamination:

1. The soil has a *measured infiltration rate*[36] of less than or equal to 9 inches per hour, except in ***groundwater protection areas*** where the measured rate must be less than or equal to 2.4 inches per hour, OR
2. The soil has a measured infiltration rate greater than 9 inches per hour, is not located within a ***groundwater protection area*** or within one-quarter-mile of a *sensitive lake*[37], and the first 2 feet of the soil beneath the ditch/channel must meet one of the following specifications for general protection of groundwater:
   a) The soil must have a *cation exchange capacity*[38] greater than 5 and an *organic content*[39] greater than 0.5%, OR
   b) The soil must be composed of less than 25% gravel by weight with at least 75% of the soil passing the #4 sieve, and the portion passing the #4 sieve must meet one of the following gradations:
      - At least 50% must pass the #40 sieve and at least 2% must pass the #100 sieve, OR
      - At least 25% must pass the #40 sieve and at least 5% must pass the #200 sieve.

   The intent of this requirement is to reduce the likelihood that pollutants will be discharged to groundwater when untreated runoff is conveyed in ditches or channels constructed in soils with high infiltration rates.

DRAFT

[35] *Natural onsite drainage feature* means a natural swale, channel, stream, closed depression, wetland, or lake.

[36] *Measured infiltration rate* shall be as measured by the EPA method or the Double Ring Infiltrometer Method (ASTM D3385). For some soils, an infiltration rate of less than 9 inches per hour may be assumed based on a soil texture determination rather than a rate measurement. For more details, see the "Groundwater Protection" requirements in Section 5.4.1.

[37] *Sensitive lake* is a designation applied by the County to lakes that are particularly prone to eutrophication from development-induced increases in phosphorus loading. Such lakes are identified on the Water Quality Applications Map adopted with this manual (see map pocket on inside of back cover).

[38] *Cation exchange capacity* shall be tested using EPA Laboratory Method 9081.

[39] *Organic content* shall be measured on a dry weight basis using ASTM D2974.

I. PUMP SYSTEMS

Pump systems may be used to convey water from one location or elevation to another within the ***project site*** provided they meet the design criteria specified for such systems in Section 4.2.3 and will be privately owned and maintained.

Pump systems discharging flows from the ***project site*** that would not have discharged by gravity flow under ***existing site conditions*** will require an approved adjustment to Core Requirement #1 (see Section 1.4, "Adjustment Process"). These pump systems will be considered only when they are necessary to prevent creation or aggravation of a flooding or erosion problem as specified in Section 1.2.2. Pump systems discharging to the Green River between River Mile 6 (South Boeing Access Road) and SR 18 must also comply with the *Green River Pump Operations Procedure Plan*.

DRAFT

1.2.5 CORE REQUIREMENT #5: EROSION AND SEDIMENT CONTROL

REQUIREMENT

All proposed projects that will clear, grade, or otherwise disturb the ***site*** must provide erosion and sediment controls to prevent, to the maximum extent practicable, the transport of sediment from the ***project site*** to downstream drainage facilities, water resources, and adjacent properties. To prevent sediment transport as well as other impacts related to land-disturbing activities, **Erosion and Sediment Control (ESC)** measures that are appropriate to the ***project site*** must be applied as described in Section 1.2.5.1 and shall perform as described in Section 1.2.5.2. In addition, these measures, both temporary and permanent, shall be implemented consistent with the requirements in Section 0 that apply to the proposed project.

Intent: To prevent the transport of sediment and other impacts, like increased runoff, related to land disturbing activities. Erosion of disturbed areas on construction sites can result in excessive sediment transport to adjacent properties and to surface waters. This sediment can result in major adverse impacts, such as flooding from obstructed drainage ways, smothering of salmonid spawning beds, algal blooms in lakes, and exceedances of State water quality standards for turbidity. These impacts can also result from the increased runoff generated by land disturbing activities on construction sites.

1.2.5.1 ESC MEASURES

Each of the following categories of ESC measures must be considered for application to the ***project site*** as detailed in the King County *Erosion and Sediment Control (ESC) Standards*, adopted as Appendix D of this manual:

1. Clearing Limits
2. Cover Measures
3. Perimeter Protection
4. Traffic Area Stabilization
5. Sediment Retention
6. Surface Water Collection
7. Dewatering Control
8. Dust Control
9. Flow Control

DRAFT

1.2.5.2 ESC PERFORMANCE AND COMPLIANCE PROVISIONS

The changing conditions typical of construction sites call for frequent field adjustments of existing ESC measures or additional ESC measures in order to meet required performance. In some cases, strict adherence to specified measures may not be necessary or practicable based on ***site*** conditions or project type. For projects in Targeted, Full, or Large Project Drainage Review, the **applicant must designate an ESC supervisor** who shall be responsible for the performance, maintenance, and review of ESC measures and for compliance with all permit conditions relating to ESC as described in the *ESC Standards*. For projects that disturb one or more acres of land, the ESC supervisor shall be a **Certified Professional in Erosion and Sediment Control** (see www.cpesc.net for more information) or a **Certified Erosion and Sediment Control Lead** whose certification is recognized by King County. King County recognition of certification means that the individual has taken a King County-approved third party training program and has passed the King County-approved test for that training program. Additionally, the applicant's selection of an ESC supervisor must be approved by King County.

The following provisions specify the minimum performance required and the circumstances under which the County may add to or vary from the ESC standards in Appendix D to meet this performance:

A. ESC PERFORMANCE

ESC measures shall be applied/installed and maintained to prevent, to the maximum extent practicable, the transport of sediment from the ***project site*** to downstream drainage systems or surface waters or into onsite wetlands, streams, or lakes or onto adjacent properties. This performance is intended to be achieved through proper selection, installation, and operation of the above ESC measures as detailed in the *ESC Standards* (detached Appendix D) and approved by the County. However, the ESC supervisor or the County may determine at any time during construction that the approved measures are not sufficient and that additional action is required based on one of the following criteria:

1. IF a turbidity test of surface and storm water discharges leaving the ***project site*** is greater than the benchmark value of 25 NTU (nephelometric turbidity units) set by the Washington State Department of Ecology, but less than 250 NTU, the ESC Supervisor shall do all of the following:

   a) Review the ESC plan for compliance and make appropriate revisions within 7 days of the discharge that exceeded the benchmark of 25 NTU, AND

   b) Fully implement and maintain appropriate ESC measures as soon as possible but no later than 10 days after the discharge that exceeded the benchmark, AND

   c) Document ESC implementation and maintenance in the ***site*** log book.

   ~~or entering onsite wetlands, streams, or lakes indicates a **turbidity level greater than 25 NTU** (nephelometric units) above the background levels of offsite surface and storm water flows entering the ***project site***, OR if surface and storm water discharges from onsite activity areas exceed 25 NTU, THEN corrective actions and/or additional measures beyond those specified in Section 1.2.5.1 shall be implemented as deemed necessary by the County inspector or ESC supervisor. *Note: The ESC supervisor shall have a turbidity meter onsite and shall use it whenever runoff occurs from onsite activities and during storm events.*~~

2. ~~IF a turbidity test indicates a **turbidity level greater than 100 NTU**, THEN County inspection staff shall be notified immediately and corrective actions and/or additional measures beyond those specified in Section 1.2.5.1 shall be implemented as deemed necessary by the County.~~IF a turbidity test of surface or storm water entering onsite wetlands, streams, or lakes indicates a turbidity level greater than 5 NTU above background when the background turbidity is 50 NTU or less, or 10% above background when the background turbidity is greater than 50 NTU, then corrective actions and/or additional measures beyond those specified in Section 1.2.5.1 shall be implemented as deemed necessary by the County inspector or onsite ESC supervisor.

3. IF discharge turbidity is 250 NTU or greater, the ESC Supervisor shall do all of the following:

   a) Notify the County by telephone, AND

   b) Review the ESC plan for compliance and make appropriate revisions within 7 days of the discharge that exceeded the benchmark of 25 NTU, AND

   c) Fully implement and maintain appropriate ESC measures as soon as possible but no later than 10 days after the discharge that exceeded the benchmark, AND

   d) Document ESC implementation and maintenance in the ***site*** log book. AND

   e) Continue to sample discharges until turbidity is 25 NTU or lower, or the turbidity is no more than 10% over background turbidity.

~~3.~~4. IF the County determines that the condition of the construction site poses a **hazard to adjacent property** or may **adversely impact drainage facilities or water resources**, THEN additional measures beyond those specified in Section 1.2.5.1 may be required by the County.

DRAFT

Note: The ESC supervisor shall have a turbidity meter onsite and shall use it whenever runoff occurs from onsite activities and during storm events.

B. FLEXIBLE COMPLIANCE

Some projects may meet the intent of Core Requirement #5 while varying from specific ESC requirements contained here and in the *ESC Standards*. If a project is designed and constructed to meet the intent of this core requirement, the County may determine that strict adherence to a specific ESC requirement is unnecessary; an approved adjustment (see Section 1.4) is not required in these circumstances. Certain types of projects are particularly suited to this greater level of flexibility, for instance, projects on relatively flat, well drained soils, projects that are constructed in closed depressions, or projects that only disturb a small percentage of a forested site may meet the intent of this requirement with very few ESC measures. More information on intent and general ESC principles is contained in the *ESC Standards* in Appendix D.

C. ROADS AND UTILITIES

Road and utility projects often pose difficult erosion control challenges because they frequently cross surface waters and are long and narrow with limited area available to treat and store sediment-laden water. Because of these factors, road and utility projects are allowed greater flexibility in meeting the intent of Core Requirement #5 as described in the *ESC Standards*.

D. ALTERNATIVE AND EXPERIMENTAL MEASURES

All measures proposed for erosion and sediment control shall conform to the details and specifications in the *ESC Standards* unless an alternative is approved by King County, and if the alternative is a new technology, it must also be approved through the state Department of Ecology's CTAPE program (see "Alternative and Experimental Measures" in the *ESC Standards*, detached Appendix D).

DRAFT

1.2.5.3 IMPLEMENTATION REQUIREMENTS

Proposed projects must identify, install, and maintain required erosion and sediment control measures consistent with the following requirements:

A. ESC PLAN

As specified in Chapter 2, all proposed projects must submit an ESC plan for implementing ESC measures. The **ESC plan** must show the location and details of all ESC measures as specified in Chapter 2 and the *ESC Standards* and shall include an **ESC report**, which contains additional directions and supporting information like a detailed construction sequence as proposed by the design engineer and any calculations or information necessary to size ESC measures and demonstrate compliance with Core Requirement #5. The ESC plan shall also contain plan notes that outline specific permit conditions as outlined in Appendix D Section D.8.2 Standard ESC Plan Notes. The County may require large, complex projects to phase construction and to submit multiple ESC plans for the different stages of construction. New ESC plans are not required for changes that are necessary during construction, unless required by the County inspector. *Note that the ESC plan is a component of, or may comprise, the Construction Stormwater Pollution Prevention Plan, which in turn is a primary component of the engineering plans required for drainage review as specified in Chapter 2.*

B. WET SEASON CONSTRUCTION

During the wet season (October 1 to April 30) any ***site*** with exposed soils shall be subject to the "Wet Season Requirements" contained in the *ESC Standards*. In addition to the ESC cover measures, these provisions include covering any newly-seeded areas with mulch and seeding as much disturbed area as possible during the first week of October to provide grass cover for the wet season. Other ESC measures

such as baker tanks and portable sand filters may be required for use during the wet season. A separate "Wet Season" ESC plan shall be submitted and approved by the County before continuing work on any ***site*** during the wet season.

C. CONSTRUCTION WITHIN CRITICAL AREAS AND BUFFERS

Any construction that will result in disturbed areas on or within a stream or associated buffer, within a wetland or associated buffer, or within 50 feet of a lake shall be subject to the "Critical Area Restrictions" contained in the *ESC Standards*. These provisions include phasing the project whenever possible so that construction in these areas is limited to the dry season.

D. MAINTENANCE

All ESC measures shall be maintained and reviewed on a regular basis as prescribed in the *ESC Standards*. ~~For projects in Full or Large Project Drainage Review, the **applicant must designate an ESC supervisor** who shall be responsible for the performance, maintenance, and review of ESC measures and for compliance with all permit conditions relating to ESC as described in the *ESC Standards*. The ESC supervisor must be a **Certified Professional in Erosion and Sediment Control** (see www.cpesc.net for more information) or a **Certified Erosion and Sediment Control Lead** whose certification is recognized by King County. King County recognition of certification means that the individual has taken a King County-approved third-party training program and has passed the King County-approved test for that training program. Additionally, the applicant's selection of an ESC supervisor must be approved by King County.~~

E. FINAL STABILIZATION

Prior to obtaining final construction approval, the ***site*** shall be stabilized, structural ESC measures (such as silt fences and sediment traps) shall be removed, and drainage facilities shall be cleaned as specified in the *ESC Standards*. A separate ESC plan describing final stabilization shall be submitted and approved by the County prior to implementation.

DRAFT

F. CONSIDERATION OF OTHER REQUIRED PERMITS

Consideration should be given to the requirements and conditions that may be applied by other agencies as part of other permits required for land-disturbing activities. In particular, the following permits may be required and should be considered when implementing ESC measures:

- A **Class IV Special Forest Practices Permit** is required by the Washington State Department of Natural Resources for projects that will clear more than two acres of forest or 5,000 board feet of timber. All such clearing is also subject to the State Environmental Policy Act (RCW 43.21C) and will require SEPA review. King County assumes lead agency status for Class IV permits, and the application may be consolidated with the associated King County development permit or approval.
- A **NPDES General Permit for Construction** (pursuant to the Washington State Department of Ecology's Baseline General Permit for Stormwater) is required for projects that will disturb one or more ~~than one~~ acres for purposes of constructing or allowing for construction of a development, or projects disturbing less than one acre that are part of a *larger common plan of sale*[40] that will ultimately disturb one or more acres.

[40] ***Common plan of development or sale*** means a site where multiple separate and distinct construction activities may take place at different times or on different schedules, but still under a single plan. Examples include: 1) phased projects and projects with multiple filings or lots, even if the separate phases or filings/lots will be constructed under separate contract or by separate owners (e.g. a development where lots are sold to separate builders); 2) a development plan that may be phased over multiple years, but is still under a consistent plan for long-term development; and 3) projects in a contiguous area that may be unrelated but still under the same contract, such as construction of a building extension and a new parking lot at the same facility.

1.2.6 CORE REQUIREMENT #6: MAINTENANCE AND OPERATIONS

REQMT

Maintenance and operation of all drainage facilities is the responsibility of the applicant or property owner, except those facilities for which King County assumes maintenance and operation as described below and in KCC 9.04.115 and KCC 9.04.120. Drainage facilities must be maintained and operated in accordance with the maintenance standards in Appendix A of this manual or other maintenance standards as approved by King County.

Intent: To ensure that the maintenance responsibility for drainage facilities is clearly assigned and that these facilities will be properly maintained and operated in perpetuity.

Drainage Facilities to be Maintained by King County

King County will assume maintenance and operation of the following drainage facilities[41] for any residential subdivision with two or more lots, and any similar development where at least two-thirds of the developed contributing area is from single family or townhouse residential structures on individual lots, except where King County grants an adjustment per Section 1.4, allowing the facilities to be maintained by the homeowners association:

- Flow control and water quality facilities within a tract or right-of-way dedicated to King County.
- Flow control BMP devices within a tract or right-of-way dedicated to King County.
- The conveyance system within improved public road right-of-way.

Note: King County may assume maintenance of facilities serving any mix of developments as part of a shared facilities plan. See Reference Section 4-D for further guidance regarding the County's assumption of maintenance responsibility for shared facilities.

DRAFT

King County **will assume maintenance** and operation of these facilities **two years after final construction approval** by DDES and an inspection by the County to ensure the facilities have been properly maintained and are operating as designed.

Flow control and water quality facilities and **flow control BMP devices** to be maintained and operated by King County must be located in a tract or right-of-way dedicated to King County. Access roads serving these facilities must also be located in the tract or right-of-way and must be connected to an improved public road right-of-way. Underground flow control or water quality facilities (tanks or vaults) may be allowed in private rights-of-way or roads if the easement includes provisions for facility access and maintenance.

Conveyance systems to be maintained and operated by King County must be located in a drainage easement, tract, or right-of-way granted to King County. *Note: King County does not normally assume maintenance responsibility for conveyance systems that are outside of improved public road right-of-way.*

Drainage Facilities to be Maintained by Private Parties

All drainage facilities maintained privately or by other public agencies, except flow control BMPs, must be maintained as specified in **Appendix A**, "Maintenance Requirements for Flow Control, Conveyance, and WQ Facilities," and as further prescribed in **Chapter 6** for water quality facilities, unless otherwise approved by King County DNRP. A copy of the **Operation and Maintenance Manual** submitted as part of the permit application (see Section 2.3.1) shall be retained on ***site*** and shall be transferred with the property to the new owner. A log of maintenance activity indicating when cleaning occurred and where waste was disposed of shall also be kept by the owner and be available for inspection by the County.

All privately maintained **flow control BMPs** must be maintained as specified in the ***site*/lot's** declaration of covenant and grant of easement per Section 5.2.1.

[41] *Note: King County does not assume maintenance of individual lot drainage systems or drainage stub-outs serving single family residential lot downspout, footing, or yard drains, nor does King County assume maintenance of the vegetated portions of water quality treatment facilities and flow control BMPs integrated into site landscaping.*

King County may inspect all privately maintained drainage facilities for compliance with these requirements. If the property owner(s) fails to maintain their facilities to the acceptable standards, the County may issue a written notice specifying the required remedial actions and requiring a schedule for timely completion of the actions. If these actions are not performed in a timely manner, the County may enter the property to perform the actions needed and bill the property owner(s) for the cost of the actions. If a hazard to public safety exists, the County may perform remedial actions without written notice.

If the proposed project is a commercial, industrial, or multifamily development or redevelopment, or a single family residential building permit, a **drainage facility declaration of covenant and grant of easement** (see Reference Section 8-J) must be recorded at the King County Office of Records and Elections prior to engineering plan approval. Whenever a flow control or water quality facility or flow control BMP is proposed to be located on a parcel separate from the parcel or parcels containing the target surfaces mitigated by the facility or BMP, provisions must be made to ensure that the owner or owners of the target surfaces have a perpetual right to operate and maintain the facility. This may be done either by recording an easement granting this right to the owner(s) of the target surfaces, or by conveying the land on which the facility sits (or an interest therein) to the owner(s) of target surfaces.

If the proposed project is a **residential subdivision development**, all privately maintained conveyance systems or other drainage facilities that convey flows through private property must be located in a **drainage easement dedicated to convey surface and storm water**. Individual owners of the properties containing these easements must maintain the drainage facilities through their property. The legal instrument creating drainage easements on private property must contain language that requires a private property owner to obtain written approval from King County prior to removing vegetation (except by routine mowing) from any drainage easement containing open, vegetated drainage facilities (such as swales, channels, ditches, ponds, etc.). See Reference Section 8-L, "Drainage Easement," for guidance.

DRAFT

1.2.7 CORE REQUIREMENT #7: FINANCIAL GUARANTEES AND LIABILITY

REQUIREMENT

All drainage facilities constructed or modified for projects (except flow control BMPs to be privately maintained) must comply with the financial guarantee requirements in King County Ordinance 12020 and the liability requirements of King County Code 9.04.100. There are **two types of financial guarantees** for projects constructing or modifying drainage facilities. These are as follows:

- The *drainage facilities restoration and site stabilization guarantee*
- The *drainage defect and maintenance guarantee*.

Intent: To ensure financial guarantees are posted to sufficiently cover the cost of correcting, if necessary, incomplete or substandard drainage facility construction work, and to warrant for two years the satisfactory performance and maintenance of those newly-constructed drainage facilities to be assumed by King County for maintenance and operation. Core Requirement #7 is also intended to ensure that a liability policy is provided that protects the proponent and the County from any damages relating to the construction or maintenance of required drainage facilities by private parties.

Drainage Facilities Restoration and Site Stabilization Financial Guarantee

Before starting construction, the applicant who must construct drainage facilities, pursuant to the drainage requirements in this manual and KCC 9.04.050, must post a drainage facilities restoration and site stabilization financial guarantee. This guarantee must be an amount sufficient to cover the cost of corrective work performed specifically for the given project on or off the ***site***. *Note: DDES may waive this guarantee on projects proposing only minor modifications or improvements to the drainage system (e.g., catch basin inserts, spill control devices, pipe replacements, etc.). In addition, this guarantee may be combined with other required guarantees as allowed in Ordinance 12020.*

Before King County will release the project's drainage facilities restoration and site stabilization financial guarantee, the applicant must do the following:

1. Construct the drainage facilities
2. Receive final construction approval from DDES
3. Pay all required fees.

Drainage Defect and Maintenance Financial Guarantee

For any constructed or modified drainage facilities to be maintained and operated by King County, the applicant must do the following:

1. Post a drainage defect and maintenance financial guarantee for a period of two years (see Reference Section 8-I, "Maintenance and Defect Agreement").
2. Maintain the drainage facilities (per the maintenance standards in Appendix A) during the two-year period following posting of the guarantee.

Before King County will release the drainage defect and maintenance financial guarantee and assume maintenance and operation of drainage facilities, the applicant must do the following:

1. For plats, record the final plat.
2. For tracts containing drainage facilities to be maintained by King County and not located within the final plat, deed the tract to King County and set property corners in conformance with state surveying standards.
3. For easements containing drainage facilities to be maintained by King County and not located within the final plat, provide easement documents and set temporary survey markers to delineate the easement location.
4. Receive a final County inspection to ensure the drainage facilities have been properly maintained and are operating as designed.
5. Correct any defects noted in the final inspection.

DRAFT

1.2.8 CORE REQUIREMENT #8: WATER QUALITY

REQMT

All proposed projects, including ***redevelopment projects***, must provide water quality (WQ) facilities to treat the runoff from those new and replaced ***pollution-generating impervious surfaces*** and new ***pollution-generating pervious surfaces*** targeted for treatment as specified in the following sections. These facilities shall be selected from a menu of treatment facility options specified by the area-specific facility requirements in Section 1.2.8.1 (p. 1-64) and implemented according to the applicable WQ implementation requirements in Section 1.2.8.2 (p. 1-71).

Intent: To require an efficient, cost-effective level of water quality treatment tailored to the sensitivities and resource protection needs of the downstream receiving water to which the ***project site*** drains, or, in the case of infiltration, protection of the receiving groundwater system.

Guide to Applying Core Requirement #8

Core Requirement #8 requires that WQ treatment facilities be provided to remove pollutants from runoff discharging from a ***project site*** in accordance with one of the three area-specific WQ facility requirements found in Section 1.2.8.1 (p. 1-64). Each area-specific facility requirement applies to one of three geographic areas of unincorporated King County, called "WQ treatment areas." Such areas are designated by King County to tailor the levels of treatment to the protection needs of specific waterbodies and resources. The three areas are **Basic WQ Treatment Areas**, **Sensitive Lake WQ Treatment Areas**, and **Sphagnum Bog WQ Treatment Areas**. They are depicted on the WQ Applications Map adopted with this manual (see the map pocket inside the back cover).

The facility requirement for each WQ treatment area includes an area-specific menu of treatment facility options, the types of surfaces from which runoff must be treated ("target surfaces"), and any exceptions to the menu and surfaces requirements.

For efficient application of Core Requirement #8, the following steps are recommended:

1. Check the exemption language on page 1-62 to determine if or which ***threshold discharge areas*** of the ***project site*** must provide WQ treatment facilities per Core Requirement #8.
2. Use the WQ Applications Map and any necessary ***site***-specific information to determine the WQ treatment area in which your project is located. If this determination can not be made from the WQ Applications Map, a more detailed delineation of WQ treatment areas is available on King County's Geographic Information System. Because the basin boundaries of Sphagnum Bog WQ Treatment Areas are not delineated on the WQ Applications Map, you may find that your project is located in one of these as well as another WQ treatment area. If this happens, the requirements of the Sphagnum Bog WQ Treatment Area take precedence.
3. Comply with the requirements specified in Section 1.2.8.1 (p. 1-64) for the WQ treatment area you identified above.
4. Consult Section 1.2.8.2 (p. 1-71) for other design requirements, allowances, and flexible compliance provisions related to implementing water quality treatment.

Other Important Information about Core Requirement #8

Core Requirement #8 is the primary component of an overall water quality protection strategy required by this manual. Other requirements include the following:

- Core Requirement #4: **Conveyance System, Spill Control Provisions**, Section 1.2.4 (p. 1-52)—This provision generally applies whenever a project constructs or replaces onsite conveyance system elements that receive runoff from ***pollution-generating impervious surfaces***. The provision requires that runoff from such impervious surfaces be routed through a spill control device prior to discharge from the ***project site*** or into a natural onsite drainage feature.

- Core Requirement #4: **Conveyance System, Groundwater Protection**, Section 1.2.4 (p. 1-52) — This provision requires that ditches/channels be lined as needed to reduce the risk of groundwater contamination when they convey runoff from ***pollution-generating impervious surfaces*** that comes into direct contact with an outwash soil.
- Special Requirement #4: **Source Control**, Section 1.3.4 (p. 1-79)—This requirement applies water quality source controls from the *King County Stormwater Pollution Prevention Manual* to those projects proposing to develop or redevelop a commercial, industrial, or multifamily ***site***.
- Special Requirement #5: **Oil Control**, Section 1.3.5 (p. 1-80)—This requirement applies special oil controls to those projects proposing to develop or redevelop a ***high-use site***.

❑ EXEMPTIONS FROM CORE REQUIREMENT #8

There are five possible exemptions from the requirement to provide **a water quality treatment facility** per Core Requirement #8:

1. Surface Area Exemption

A proposed project or any ***threshold discharge area*** within the ***site*** of a project is exempt if it meets all of the following criteria:

a) Less than 5,000 square feet of ***new PGIS*** that is **not *fully dispersed*** will be added, AND

b) Less than 5,000 square feet of ***new*** **plus *replaced PGIS*** that is **not *fully dispersed*** will be created as part of a ***redevelopment project***, AND

c) Less than 35,000 square feet of ***new PGPS*** that is **not *fully dispersed*** will be added.

2. Impervious Surface Exemption for Transportation Redevelopment Projects

A proposed ***transportation redevelopment project*** or any ***threshold discharge area*** within the ***site*** of such a project is exempt if it meets all of the following criteria:

a) The **total *new impervious surface*** within the project limits is less than 50% of the existing impervious surface, AND

b) Less than 5,000 square feet of ***new PGIS*** that is **not *fully dispersed*** will be added, AND

c) Less than 35,000 square feet of ***new PGPS*** that is **not *fully dispersed*** will be added.

3. Cost Exemption for Parcel Redevelopment Projects

A proposed ***redevelopment project*** on a single or multiple parcel ***site*** or any ***threshold discharge area*** within the ***site*** of such a project is exempt if it meets all of the following criteria:

a) The **total valuation** of the project's proposed improvements (including interior improvements and excluding required mitigation improvements) is less than 50% of the assessed value of the existing ***site*** improvements, AND

b) Less than 5,000 square feet of ***new PGIS*** that is **not *fully dispersed*** will be added, AND

c) Less than 35,000 square feet of ***new PGPS*** that is **not *fully dispersed*** will be added.

~~4. Standard Infiltration Exemption~~

~~A proposed project or any drainage area within a project is exempt if the runoff from ***pollution-generating pervious*** and ***impervious surfaces*** is infiltrated in soils with a *measured infiltration rate*~~[42]

[42] ~~*Measured infiltration rate* shall be as measured by the EPA method or the Double Ring Infiltrometer Method (ASTM D3385). For some soils, an infiltration rate of less than 9 inches per hour may be assumed based on a soil texture determination rather than a rate measurement. For more details, see the "Groundwater Protection" requirements in Section 5.4.1.~~

DRAFT

~~of less than or equal to 9 inches per hour, except in ***groundwater protection areas*** where the measured rate must be less than or equal to 2.4 inches per hour.~~

~~5~~4. Soil Treatment Exemption

A proposed project or any drainage area within a project is exempt if the runoff from ***pollution-generating impervious surfaces*** is infiltrated in soils that meet the "groundwater protection criteria" outlined below, except ~~where the measured infiltration rate is greater than 9 inches per hour in ***groundwater protection areas*** or~~ areas within one-quarter-mile of a *sensitive lake*.[43]

Groundwater Protection Criteria: The first 2 feet or more of the soil beneath an infiltration facility must have a *cation exchange capacity*[44] greater than 5 and an *organic content*[45] greater than 0.5%, AND must meet one of the following specifications for general protection of groundwater:

a) The soil must have a ~~*cation exchange capacity*[46] greater than 5 and an *organic content*[47] greater than 0.5%~~ *measured infiltration rate*[48] of less than or equal to 9 inches per hour, except in ***groundwater protection areas*** where the measured rate must be less than or equal to 2.4 inches per hour, OR

b) The soil must be composed of less than 25% gravel by weight with at least 75% of the soil passing the #4 sieve, and the portion passing the #4 sieve must meet one of the following gradations:

- At least 50% must pass the #40 sieve and at least 2% must pass the #100 sieve, OR
- At least 25% must pass the #40 sieve and at least 5% must pass the #200 sieve.

DRAFT

[43] *Sensitive lake* is a designation applied by the County to lakes that are particularly prone to eutrophication from development-induced increases in phosphorus loading. Such lakes are identified on the Water Quality Applications Map adopted with this manual (see map pocket on inside of back cover).

[44] *Cation exchange capacity* shall be tested using EPA Laboratory Method 9081.

[45] *Organic content* shall be measured on a dry weight basis using ASTM D2974.

[46] *Cation exchange capacity* shall be tested using EPA Laboratory Method 9081.

[47] *Organic content* shall be measured on a dry weight basis using ASTM D2974.

[48] *Measured infiltration rate* shall be as measured by the EPA method or the Double Ring Infiltrometer Method (ASTM D3385). For some soils, an infiltration rate of less than 9 inches per hour may be assumed based on a soil texture determination rather than a rate measurement. For more details, see the "Groundwater Protection" requirements in Section 5.4.1.

1.2.8.1 AREA-SPECIFIC WATER QUALITY FACILITY REQUIREMENTS

REQUIREMENT

Projects subject to Core Requirement #8 must provide a water quality treatment facility selected from a menu of treatment facility options identified in the area-specific facility requirements and exceptions for the WQ treatment area in which the proposed project or ***threshold discharge area*** of the proposed project is located. These WQ treatment areas are listed below and their requirements and exceptions are detailed in the following subsections:

A. Basic WQ Treatment Areas

B. Sensitive Lake WQ Treatment Areas

C. Sphagnum Bog WQ Treatment Areas.

Intent: To apply an appropriate level of water quality treatment based on the sensitivities of receiving waters for the drainage area in which the project lies. These drainage areas are identified as WQ treatment areas on the WQ Applications Map adopted with this manual. In addition to a minimum basic standard, which applies broadly to most geographic areas, special menus are provided for land uses that generate the highest concentrations of metals in stormwater and for ***sites*** within the watersheds of sensitive lakes, and sphagnum bog wetlands.

A. BASIC WQ TREATMENT AREAS

Basic WQ Treatment Areas are designated by King County where a general, cost-effective level of treatment is sufficient for most land uses. Some land uses, however, will need an increased level of treatment because they generate high concentrations of metals in stormwater runoff and acute concentrations of metals in streams are toxic to fish. The treatment facility requirements for Basic WQ Treatment Areas provide for this increase in treatment. Basic WQ Treatment Areas are delineated on the WQ Applications Map adopted with this manual (see the map pocket inside the back cover). Any unincorporated areas of King County not shown on this map shall be assumed to be Basic WQ Treatment Areas. A more detailed delineation is available on the County's Geographic Information System.

DRAFT

Note: For projects located at or near the delineated boundary of the Basic WQ Treatment Area, ***site****-specific topography or drainage information may be needed to verify that the project or any* ***threshold discharge area*** *of the project is within the WQ treatment area. Any* ***threshold discharge area*** *is considered to be within the Basic WQ Treatment Area if the* ***threshold discharge area*** *drains to a waterbody or drainage system that is clearly within the mapped Basic WQ Treatment Area. The only* ***exception*** *to this is if the* ***threshold discharge area*** *also drains to a sphagnum bog wetland larger than 0.25 acres in size as described in Subsection C, "Sphagnum Bog WQ Treatment Areas" (p. 1-70). In this case, the* ***threshold discharge area*** *is considered to be located within a Sphagnum Bog WQ Treatment Area and is subject to the facility requirement of that area only (i.e., required treatment menu, target surfaces, and exceptions).*

Required Treatment Menu

REQUIREMENT

Within Basic WQ Treatment Areas, a treatment facility option from the **Basic WQ menu** shall be used to treat runoff from the surfaces listed under "Target Surfaces" below, except where such treatment is waived or reduced by the area-specific exceptions at the end of this subsection and except where the Enhanced Basic WQ menu is applicable as follows. If 50% or more of the runoff that drains to any proposed treatment facility is from one or more of the **following land uses**, then the **Enhanced Basic WQ menu** shall be used in place of the Basic WQ menu for the design of this facility, except if such treatment is waived or reduced by the area-specific exceptions at the end of this subsection:

1. Residential subdivision development in which the actual density of single family units is equal to or greater than 8 units per acre of developed area.

2. Industrial, commercial, or multifamily development.

REQUIREMENT

~~3. Commercial development with an expected average daily traffic (ADT) count of 100 or more vehicles per 1,000 square feet of gross building area.~~

~~4. Commercial development involved with vehicle repair, maintenance, or sales.~~

~~5.~~3. A road with an expected average daily traffic (ADT) count of 2,000 or more vehicles or expected to serve 200 or more homes. *Note: those roads defined in the King County Road Standards as urban subaccess streets, rural subaccess streets, urban minor access streets – residential, rural minor access streets – residential, urban subcollectors, and rural subcollectors all serve less than 100 homes by definition.*

Treatment Goal and Options

The treatment goal for facility options in the **Basic WQ menu** is 80% removal of total suspended solids (TSS) for a typical rainfall year, assuming typical pollutant concentrations in urban runoff.[49] TSS is the general performance indicator for basic water quality protection because it is the most obvious pollutant of concern. The Basic WQ menu includes facilities such as wetponds, combined detention/wetponds, biofiltration swales, filter strips, and sand filters. See Chapter 6 for specific facility choices and design details.

The treatment goal for facility options in the **Enhanced Basic WQ menu** is 50% reduction of total zinc. Zinc is an indicator of a wider range of metals typically found in urban runoff that are potentially toxic to fish and other aquatic life. The Enhanced Basic WQ menu includes options for use of a basic-sized stormwater wetland, a large sand filter, or a combination of two facilities in series, one of which is either a sand filter or a Stormfilter™ (leaf compost filter). See Chapter 6 for specific facility options and designs.

DRAFT

Intent

The **Basic WQ menu** is intended to be applied to both stormwater discharges draining to surface waters and those infiltrating into soils that do not provide adequate groundwater protection (see Exemptions 4 and 5 from Core Requirement #8). Overall, the 80% TSS removal objective, in conjunction with special requirements for source control and ***high-use site*** controls, should result in good stormwater quality for all but the most sensitive water bodies. Increased water quality treatment is necessary for developments that generate the highest concentrations of metals and for developments that drain to sensitive lakes and sphagnum bog wetlands.

Facility options in the **Enhanced Basic WQ menu** are intended to remove more metals than expected from those in the Basic WQ menu. Lower metal concentrations reduce the risk to fish of exposure to both chronic and acutely toxic concentrations of metals such as copper and zinc. As the toxicity of metals depends on their concentration, this standard is most effective for ***project sites*** with a larger proportion of ***pollution-generating impervious surface*** like roadways and medium to high density subdivisions. The Enhanced Basic WQ menu is intended to apply to all such ***project sites*** that drain by surface flows to a fish-bearing stream. However, projects that drain entirely by pipe to the ***major receiving waters*** listed on page 1-32 are excused from the increased treatment and may revert to the Basic WQ menu because concentration effects are of less concern as the overall flow volume increases.

Target Surfaces

Facilities **in Basic WQ Treatment Areas** must treat (either directly or in effect) the runoff from the following target surfaces within the ***threshold discharge area*** for which the facility is required:

1. ***New PGIS*** that is **not *fully dispersed*** per the criteria on Page 1-43. For individual lots within residential subdivision projects, the extent of ***new PGIS*** shall be assumed based on expected driveway size as approved by DDES.

[49] For evaluation purposes, typical concentrations of TSS in Seattle area runoff are between 30 and 100 mg/L (Table 1, "Water Quality Thresholds Decision Paper," King County Surface Water Management Division, April 1994).

2. ***New PGPS*** that is **not *fully dispersed*** and from which there will be a concentrated surface discharge in a natural channel or man-made conveyance system from the ***site***. For individual lots within residential subdivision projects, the extent of ***new pervious surface*** shall be assumed to be the entire lot area, except the assumed impervious portion as specified in Chapter 3 and any portion in which native conditions are preserved by covenant, tract, or easement.

3. **Existing impervious surface** added since January 8, 2001 that is **not *fully dispersed*** and not yet mitigated with a County-approved water quality facility or flow control BMP. *Note: January 8, 2001 is the effective date of the ESA 4(d) Rule for Puget Sound Chinook salmon.*

4. ***Replaced PGIS*** that is **not *fully dispersed*** on a ***transportation redevelopment project*** in which ***new impervious surface*** is 5,000 square feet or more and totals 50% or more of the existing impervious surface within the project limits.

5. ***Replaced PGIS*** that is **not *fully dispersed*** on a **parcel *redevelopment project*** in which the total of new plus ***replaced impervious surface*** is 5,000 square feet or more and whose valuation of proposed improvements (including interior improvements and excluding required mitigation improvements) exceeds 50% of the assessed value of the existing ***site*** improvements.

Exceptions

The following exceptions apply only **in Basic WQ Treatment Areas**:

1. The facility requirement **in Basic WQ Treatment Areas** as applied to **target *PGPS*** may be waived altogether if there is a good faith agreement with the King Conservation District to implement a farm management plan for agricultural uses, or DDES approves a *landscape management plan*[50] that controls solids, pesticides, and fertilizers leaving the ***site***.

2. The **Enhanced Basic WQ menu** as specified above for certain land uses may be reduced to the **Basic WQ menu** for treatment of any runoff that is infiltrated according to the standards in Section 5.4.

3. The **Enhanced Basic WQ menu** as specified above for certain land uses may be reduced to the **Basic WQ menu** for treatment of any runoff that is discharged directly, via a non-fish-bearing conveyance system, all the way to the ordinary high water mark of a stream with a mean annual flow of 1,000 cfs or more (at the discharge point of the conveyance system) or a lake that is 300 acres or larger.

4. The **Enhanced Basic WQ menu** as specified above for commercial land uses may be reduced to the **Basic WQ menu** if all of the following criteria are met:

   a) No leachable metals (e.g., galvanized metals) are currently used or proposed to be used in areas of the ***site*** exposed to the weather, AND

   b) A covenant is recorded that prohibits future such use of leachable metals on the ***site*** (use the covenant in Reference Section XX), AND

   c) Less than 50% of the runoff draining to the proposed treatment facility is from any area of the ***site*** comprised of one or both of the following land uses:

      - Commercial development with an expected ADT of 100 or more vehicles per 1,000 square feet of gross building area.
      - Commercial development involved with vehicle repair, maintenance, or sales.

~~4.~~5. The facility requirement as applied to ***replaced PGIS*** may be waived if the County has adopted a plan and implementation schedule for fulfilling this requirement using **regional facilities**.

DRAFT

[50] *Landscape management plan* means a King County approved plan for defining the layout and long-term maintenance of landscaping features to minimize the use of pesticides and fertilizers, and to reduce the discharge of suspended solids and other pollutants. Guidelines for preparing landscape management plans can be found in Reference Section 4-A. Submittal requirements are detailed in Section 2.3.1.4.

B. SENSITIVE LAKE WQ TREATMENT AREAS

Sensitive Lake WQ Treatment Areas are designated by King County in the watersheds of lakes that have a combination of water quality characteristics and watershed development potential that makes them particularly prone to eutrophication induced by development. Such areas are delineated on the WQ Applications Map adopted with this manual (see the map pocket inside the back cover). A more detailed delineation is available on the County's Geographic Information System.

Note: For projects located at or near the delineated boundary of the Sensitive Lake WQ Treatment Area, ***site****-specific topography or drainage information may be needed to verify that the project or any* ***threshold discharge area*** *of the project is within the WQ treatment area. Any* ***threshold discharge area*** *is considered to be within the Sensitive Lake WQ Treatment Area if the* ***threshold discharge area*** *drains to the sensitive lake itself or to any waterbody or drainage system that is clearly within the mapped Sensitive Lake WQ Treatment Area. The only* ***exception*** *to this is if the* ***threshold discharge area*** *also drains to a sphagnum bog wetland larger than 0.25 acres in size as described in Subsection D, "Sphagnum Bog WQ Treatment Areas" (p. 1-70). In this case, the requirements of Sphagnum Bog WQ Treatment Areas (i.e., required treatment menu, target surfaces, and exceptions) shall apply to the* ***threshold discharge area****.*

Required Treatment Menu

REQUIREMENT

Within Sensitive Lake WQ Treatment Areas, a treatment facility option from the **Sensitive Lake Protection menu** shall be used to treat runoff from the surfaces listed under "Target Surfaces" below, except where such treatment is waived or reduced by the area-specific exceptions at the end of this subsection and except where the Enhanced Basic WQ menu is applicable as follows. If 50% or more of the runoff that drains to any proposed treatment facility is from one or more of the **following land uses**, then a treatment facility option common to both the **Sensitive Lake Protection menu and Enhanced Basic WQ menu** shall be used for the design of this facility, except if such treatment is waived or reduced by the area-specific exceptions at the end of this subsection:

DRAFT

1. Residential subdivision development in which the actual density of single family units is equal to or greater than 8 units per acre of developed area.
2. Industrial, commercial, or multifamily development.

~~3. Commercial development with an expected average daily traffic (ADT) count of 100 or more vehicles per 1,000 square feet of gross building area.~~

~~4. Commercial development involved with vehicle repair, maintenance, or sales.~~

~~5.~~3. A road with an expected average daily traffic (ADT) count of 2,000 or more vehicles or expected to serve 200 or more homes. *Note: those roads defined in the King County Road Standards as urban subaccess streets, rural subaccess streets, urban minor access streets – residential, rural minor access streets – residential, urban subcollectors, and rural subcollectors all serve less than 100 homes by definition.*

Treatment Goal and Options

The treatment goal for facility options in the Sensitive Lake Protection menu is 50% annual average total phosphorus (TP) removal assuming typical pollutant concentrations in urban runoff.[51] This goal was chosen as a realistic and cost-effective level of phosphorus removal. The Sensitive Lake Protection menu includes options for using either Basic WQ facilities of larger size, combinations of two facilities in series,[52] or a single facility in combination with land use planning elements that reduce phosphorus. See Chapter 6 for specific facility options and design details.

[51] Phosphorus concentrations of between 0.10 and 0.50 mg/L are considered typical of Seattle area runoff (Table 1, "Water Quality Thresholds Decision paper," King County Surface Water Management Division, April 1994).

[52] *In series* means that the entire treatment water volume flows from one facility to the other in turn.

On some developments or portions thereof that have surface uses that generate the highest concentrations of metals in stormwater runoff, the treatment goal is expanded to include 50% reduction of total zinc. This expanded goal requires use of a treatment facility option that is common to both the Sensitive Lake Protection menu and the Enhanced Basic menu.

Intent

A project discharging runoff via surface flow contributes phosphorus loading to a sensitive lake regardless of distance from the lake. If discharge is via infiltration through coarse soils, it is also possible that phosphorus would be transported through the ground for some distance without attenuation. This groundwater transport distance is considered to be typically no more than one-quarter mile. Therefore, onsite treatment using the **Sensitive Lake Protection menu** is required prior to infiltration within one-quarter mile of a sensitive lake. Infiltration through finer soils is expected to provide significant attenuation of TP, so the general groundwater protection criteria specified on page 1-63 under "Soil Treatment Exemption" are considered sufficient for infiltration through finer soils.

Where the treatment goal is expanded to include 50% reduction of total zinc, the facility options common to both the Sensitive Lake Protection menu and the Enhanced Basic WQ menu should meet this goal as well as the lake protection goal of 50% removal of annual average total phosphorous. The intent behind the 50% reduction of total zinc goal and why it is applied is described on Page 1-65.

Target Surfaces

Facilities **in Sensitive Lake WQ Treatment Areas** must mitigate (either directly or in effect) the runoff from the following target surfaces within the ***threshold discharge area*** for which the facility is required:

1. ***New PGIS*** that is **not *fully dispersed*** per the criteria on Page 1-43. For individual lots within residential subdivision projects, the extent of ***new PGIS*** shall be assumed based on expected driveway size as approved by DDES.
2. ***New PGPS*** that is **not *fully dispersed*** and from which there will be a concentrated surface discharge in a natural channel or man-made conveyance system from the ***site***. For individual lots within residential subdivision projects, the extent of ***new pervious surface*** shall be assumed to be the entire lot area, except the assumed impervious portion as specified in Chapter 3 and any portion in which native conditions are preserved by covenant, tract, or easement. *Note: where the runoff from **target PGPS** is separated from the runoff from **target PGIS**, the Basic WQ menu may be used in place of the Sensitive Lake Protection menu for treatment of runoff from the **target PGPS** (see the area-specific exceptions at the end of this subsection).*
3. **Existing impervious surface** added since January 8, 2001 that is **not *fully dispersed*** and not yet mitigated with a County-approved water quality facility or flow control BMP. *Note: January 8, 2001 is the effective date of the ESA 4(d) Rule for Puget Sound Chinook salmon.*
4. ***Replaced PGIS*** that is **not *fully dispersed*** on a ***transportation redevelopment project*** in which ***new impervious surface*** is 5,000 square feet or more and totals 50% or more of the existing impervious surface within the project limits.
5. ***Replaced PGIS*** that is **not *fully dispersed*** on a **parcel *redevelopment project*** in which the total of new plus ***replaced impervious surface*** is 5,000 square feet or more and whose valuation of proposed improvements (including interior improvements and excluding required mitigation improvements) exceeds 50% of the assessed value of the existing ***site*** improvements.

DRAFT

Exceptions

The following exceptions apply only **in Sensitive Lake WQ Treatment Areas**:

1. The **Basic WQ menu** may be used in place of the **Sensitive Lake Protection menu** for treatment of any **runoff that is infiltrated** according to the standards in Section 5.4, provided the infiltration facility is not located in soils having *high infiltration rates*[53] within one-quarter-mile of the lake's mean-high-water level. If the infiltration facility is located beyond the one-quarter-mile limit, the Basic WQ menu may be used regardless of the infiltration rate.

2. Application of the **Enhanced Basic WQ menu** as specified above for certain land uses may be waived for treatment of any runoff that is infiltrated according to the standards in Section 5.4.

3. Application of the **Enhanced Basic WQ menu** as specified above for certain land uses may be waived for treatment of any runoff that is discharged, via a non-fish-bearing conveyance system, all the way to the ordinary high water mark of a stream with a mean annual flow of 1,000 cfs or more (at the discharge point of the conveyance system) or a lake that is 300 acres or larger.

4. The **Enhanced Basic WQ menu** as specified above for commercial land uses may be waived if the all of the following criteria are met:

   a) No leachable metals (e.g., galvanized metals) are currently used or proposed to be used in areas of the ***site*** exposed to the weather, AND

   b) A covenant is recorded that prohibits future such use of leachable metals on the ***site*** (use the covenant in Reference Section XX), AND

   c) Less than 50% of the runoff draining to the proposed treatment facility is from any area of the ***site*** comprised of one or both of the following land uses:

      - Commercial development with an expected ADT of 100 or more vehicles per 1,000 square feet of gross building area.

      - Commercial development involved with vehicle repair, maintenance, or sales.

~~4.~~5. The **Basic WQ menu** may be used for treatment of any runoff from **target *PGPS*** that is treated separately from the runoff from **target *PGIS***.

~~5.~~6. The facility requirement as applied to **target *PGPS*** may be waived altogether if there is a good faith agreement with the King Conservation District to implement a **farm management plan** for agricultural uses, or DDES approves a **landscape management plan** that controls solids, pesticides, and fertilizers leaving the ***site***.

~~6.~~7. The facility requirement as applied to ***replaced PGIS*** may be waived if the County has adopted a plan and implementation schedule for fulfilling this requirement using **regional facilities**.

Note: If a lake management plan has been prepared and adopted by King County, additional treatment and/or other water quality measures may be required as specified in the plan and pursuant to Special Requirement #1, Section 1.3.1 (p. 1-75).

C. SPHAGNUM BOG WQ TREATMENT AREAS

Sphagnum Bog WQ Treatment Areas are areas of King County that **drain to *sphagnum bog wetlands*[54] larger than 0.25 acres in *size*[55]**. These wetlands support unique vegetation communities, and they tend to develop in areas where water movement is minimized. Bogs are typically isolated from significant

[53] *High infiltration rates* are those in excess of 9 inches per hour as measured by the EPA method or the Double Ring Infiltrometer method (ASTM D3385). These will typically be medium to coarse sand or gravel soil with low silt content. See Section 5.4.1 for information on measuring infiltration rates.

[54] A *sphagnum bog wetland* is defined as a wetland dominated by sphagnum moss and which has an associated acid-loving plant community. A technical definition can be found in the "Definitions" section.

[55] The *size* of a sphagnum bog wetland is defined by the boundaries of the sphagnum bog plant community.

DRAFT

sources of surface and ground water and receive their main water supply from rainfall. Sphagnum bog wetlands are generally uncommon in the Puget Sound area; of all the inventoried wetlands in King County, only a small percentage have sphagnum bog components.[56]

Only a portion of all sphagnum bog wetlands have been identified and mapped by King County. Consequently, many of these wetlands and their contributing drainage areas must be identified during the wetland identification and delineation for a ***project site*** and during offsite analysis as required in Core Requirement #2. A list of identified sphagnum bog wetlands is included on the WQ Applications Map; however, if a wetland that meets the definition of a sphagnum bog wetland is found downstream of a ***project site***, the ***project site*** is considered to be within a Sphagnum Bog WQ Treatment Area whether the wetland is listed or not.

*Note: Any **threshold discharge area** that drains to a sphagnum bog wetland larger than 0.25 acres in size is considered to be within a Sphagnum Bog WQ Treatment Area regardless of the WQ treatment area indicated by the WQ Applications Map.*

Required Treatment Menu

REQMT

A treatment option from the **Sphagnum Bog Protection menu** shall be used to treat runoff from the target surfaces specified below, except where this mitigation is waived or reduced by the area-specific exceptions at the end of this subsection.

Treatment Goals and Options

The treatment goals for protection of sphagnum bog wetlands include the control of nutrients, alkalinity, and pH. Although these goals may change as additional information about these wetlands becomes available, target pollutant removals for sphagnum bog protection are currently as follows:

- Total phosphorus reduction of 50%
- Nitrate + nitrite reduction of 40%
- pH below 6.5
- Alkalinity below 10 mg $CaCO_3$/L.

Facility options to meet these goals are limited; therefore, the County discourages developments from discharging runoff to sphagnum bog wetlands. Treatment facility options include either infiltration of stormwater up to the 10-year event or a *treatment train*[57] of two or three facilities in series. One of the facilities in the train must be a sand filter. The order of facilities in the treatment train is important; see Chapter 6 for specific facility options and design details.

Intent

Sphagnum bog wetlands support unique vegetation communities that are extremely sensitive to changes in alkalinity and nutrients from surface water inputs. While treatment facility options emphasize reduction of mineral elements (alkalinity) and nutrients in the runoff, little is known about their ability to reduce alkalinity or to actually protect sphagnum-based plant communities. In addition, the effect of frequent water level changes on the sphagnum plant community is also unknown but could be damaging. Hence, it is best to avoid discharge to sphagnum bog wetlands whenever possible.

DRAFT

[56] Approximately 3% of wetlands in the 1990 sensitive areas inventory are either sphagnum bogs or include portions of a lake or wetland with bog characteristics.

[57] A *treatment train* is a combination of two or more treatment BMPs connected in series (i.e., the design water volume passes through each facility in turn).

Target Surfaces

Facilities **in Sphagnum Bog WQ Treatment Areas** must mitigate (either directly or in effect) the runoff from the following target surfaces within the ***threshold discharge area*** for which the facility is required:

1. ***New PGIS*** that is **not *fully dispersed*** per the criteria on Page 1-43. For individual lots within residential subdivision projects, the extent of ***new PGIS*** shall be assumed based on expected driveway size as approved by DDES.
2. ***New PGPS*** that is **not *fully dispersed*** and from which there will be a concentrated surface discharge in a natural channel or man-made conveyance system from the ***site***. For individual lots within residential subdivision projects, the extent of ***new pervious surface*** shall be assumed to be the entire lot area, except the assumed impervious portion as specified in Chapter 3 and any portion in which native conditions are preserved by covenant, tract, or easement.
3. **Existing impervious surface** added since January 8, 2001 that is **not *fully dispersed*** and not yet mitigated with a County-approved water quality facility or flow control BMP. *Note: January 8, 2001 is the effective date of the ESA 4(d) Rule for Puget Sound Chinook salmon.*
4. ***Replaced PGIS*** that is **not *fully dispersed*** on a ***transportation redevelopment project*** in which ***new impervious surface*** is 5,000 square feet or more and totals 50% or more of the existing impervious surface within the project limits.
5. ***Replaced PGIS*** that is **not *fully dispersed*** on a **parcel *redevelopment project*** in which the total of new plus ***replaced impervious surface*** is 5,000 square feet or more and whose valuation of proposed improvements (including interior improvements and excluding required mitigation improvements) exceeds 50% of the assessed value of the existing ***site*** improvements.

Exceptions

The following exceptions apply only **in Sphagnum Bog WQ Treatment Areas**:

1. The **Basic WQ menu** may be used in place of the Sphagnum Bog Protection menu for treatment of any **runoff that is infiltrated** provided the infiltration facility is not located in soils having *high infiltration rates*[58] within one-quarter-mile of the mean-high-water level of a sensitive lake intended to be protected by the Sensitive Lake WQ Treatment Area designation. If the infiltration facility is located in soils with high infiltration rates within the prescribed distance of a sensitive lake, then the Sensitive Lake Protection menu shall be used.
2. The facility requirement for Sphagnum Bog WQ Treatment Areas may be reduced to that of the surrounding WQ treatment area (i.e., either the Basic WQ Treatment Area or Sensitive Lake Treatment Area, whichever contains the Sphagnum Bog WQ Treatment Area) for treatment of any ***replaced PGIS*** **runoff**.

*Note: Unlike other WQ treatment areas, the facility requirement for Sphagnum Bog WQ Treatment Areas as applied to **target PGPS** may **not** be waived through a farm or landscape management plan.*

1.2.8.2 WATER QUALITY IMPLEMENTATION REQUIREMENTS

Water quality treatment facilities shall be designed and implemented in accordance with the following requirements, allowances, and flexible compliance provisions:

A. METHODS OF ANALYSIS AND DESIGN

Water quality treatment facilities shall be analyzed and designed as detailed in Chapter 6.

[58] *High infiltration rates* are those in excess of 9 inches per hour as measured by the EPA method or the Double Ring Infiltrometer method (ASTM D3385). These will typically be medium to coarse sand or gravel soil with low silt content. See Section 5.4.1 for information on measuring infiltration rates.

DRAFT

B. SITING OF TREATMENT FACILITIES

Required treatment facilities shall be located so as to treat the runoff from all target surfaces, except as allowed below under "Treatment Trades" and "Untreated Discharges."

Any other onsite or offsite runoff draining to a proposed treatment facility must be treated whether it is from a **target pollution-generating surface** or not and regardless of whether the runoff has already been treated by another facility. The facility must be sized for all flows/volumes entering the facility. This is because treatment effectiveness is determined in part by the total volume of runoff entering the facility.

C. TREATMENT TRADES

The runoff from **target pollution-generating surfaces** may be released untreated if an existing non-targeted pollution-generating surface of equivalent size and pollutant characteristics lying within the same watershed or stream reach tributary area is treated on the ***project site***. Such substitution is subject to the following restrictions:

1. The existing non-targeted pollution-generating surface is not currently being treated, is not required to be treated by any phase of the proposed project, is not subject to NPDES or other permit requirements, and is not under a compliance order or other regulatory action, AND
2. The proposal is reviewed and approved by DDES.

D. UNTREATED DISCHARGES

If ***site*** topographic constraints are such that runoff from a **target pollution-generating surface** must be pumped to be treated by the required water quality facility, then DDES may allow the area's runoff to be released untreated (except for those ***project sites*** draining to a sphagnum bog wetland) provided that all of the following conditions are met:

1. Treatment of the constrained area by filter strip, biofiltration, or a linear sand filter is not feasible, and a **treatment trade** as described above is not possible.
2. The untreated target surface is less than 5,000 square feet of ***new PGIS*** and is less than 5,000 square feet of new plus ***replaced PGIS*** on a ***redevelopment project***.
3. Any **target *PGPS*** within the area to be released untreated shall be addressed with a landscape management plan.

DRAFT

E. USE OF EXPERIMENTAL WATER QUALITY FACILITIES

Treatment facilities other than those identified in Chapter 6 are allowed on an experimental basis if it can be demonstrated that they are likely to meet the pollutant removal goal for the applicable receiving water. Use of such facilities requires an experimental design adjustment to be approved by King County according to Section 1.4, "Adjustment Process" (p. 1-83). In addition, any new treatment technologies must be approved through the state Department of Ecology's *TAPE program*[59] before the technology can be approved by King County. When sufficient data on performance has been collected and if performance is acceptable, the new facility will be added to the appropriate water quality menu for common use through a blanket adjustment or update of this manual.

F. OWNER RESPONSIBILITY FOR WATER QUALITY

Regardless of the means by which a property owner chooses to meet the water quality requirements of this manual – whether a treatment facility, a train of facilities, a treatment trade or an experimental treatment facility – it is the responsibility of the property owner to ensure that runoff from their ***site*** does not create

[59] *TAPE* stands for Technology Assessment Protocol – Ecology. For more information, see Ecology's website at http://www.ecy.wa.gov/programs/wq/stormwater/newtech/index.html.

water quality problems or degrade beneficial uses downstream. It is also the responsibility of the property owner to ensure that the discharge from their property is not in violation of state and federal laws.

DRAFT

DRAFT

1.3 SPECIAL REQUIREMENTS

This section details the following five special drainage requirements that may apply to the proposed project depending on its location or ***site***-specific characteristics:

- "Special Requirement #1: Other Adopted Area-Specific Requirements," Section 1.3.1
- "Special Requirement #2: Flood Hazard Area Delineation," Section 1.3.2 (p. 1-77)
- "Special Requirement #3: Flood Protection Facilities," Section 1.3.3 (p. 1-78)
- "Special Requirement #4: Source Control," Section 1.3.4 (p. 1-79)
- "Special Requirement #5: Oil Control," Section 1.3.5 (p. 1-80).

1.3.1 SPECIAL REQUIREMENT #1: OTHER ADOPTED AREA-SPECIFIC REQUIREMENTS

This manual is one of several adopted regulations in King County that apply requirements for controlling drainage on an area-specific basis. The areal clearing restrictions for RA-zoned parcels in KCC 16.82.150 (see Reference Section 3-A) is an example of zoning and land use restrictions used to reduce drainage impacts in certain areas of the County. Other adopted area-specific regulations include requirements that have a more direct bearing on the drainage design of a proposed project. These regulations include the following:

DRAFT

- **Critical Drainage Areas (CDAs):** DNRP establishes CDAs in areas where flooding and/or erosion conditions present an imminent likelihood of harm to the welfare and safety of the surrounding community. The special requirements in CDAs typically include more restrictive flow control and clearing standards. Maps showing CDA boundaries are available from DNRP or DDES.
- **Master Drainage Plans (MDPs):** MDPs are comprehensive drainage plans prepared for urban planned developments (UPDs) or other large, complex projects (described in Section 1.1.2.4). Projects covered by a MDP must meet any adopted requirements specific to that plan.
- **Basin Plans (BPs):** The King County Council adopts basin plans to provide for the comprehensive assessment of resources and to accommodate growth while controlling adverse impacts to the environment. A basin plan may recommend specific land uses, regional capital projects, and special drainage requirements for future development within the basin area it covers.
- **Salmon Conservation Plans (SCPs):** Salmon conservation plans are comprehensive, ecosystem-based plans intended to identify and assess the means to protect and restore salmon habitat through mechanisms such as habitat improvements, regulations, incentives, BMPs, land acquisition, and public education activities. These plans are developed in collaboration with other jurisdictions within a water resource inventory area (WRIA) designated by the state under WAC 173-500-040 and spanning several basins or subbasins.
- **Stormwater Compliance Plans (SWCPs):** Stormwater compliance plans ~~or studies~~ are a subbasin ~~level~~ or outfall specific assessment of ~~whether~~ the quantity and/or quality of King County's municipal separate storm sewer system ~~stormwater~~ discharges to determine actions necessary for ~~are meeting the "maximum extent practicable" standard for applying technology-based controls to maintain and restore the physical, chemical, and biological integrity of the Nation's waters in~~ compliance with the National Pollutant Discharge Elimination System (NPDES) General Municipal Stormwater Permit issued by the state Department of Ecology pursuant to ~~permit program under~~ the federal Clean Water Act. These plans/studies may recommend ~~subbasin-specific~~ capital projects, flow control standards, water quality controls, public education activities, or other actions deemed necessary for ~~Clear Water Act~~ compliance with the Clean Water Act and RCW 90.48, Water Pollution Control.

- **Lake Management Plans (LMPs):** The King County Council adopts lake management plans to provide for comprehensive assessment of resources and to accommodate growth while controlling adverse impacts from nutrient loading to selected lakes. A lake management plan may recommend nutrient control through special drainage and source control requirements for proposed projects within the area it covers.
- **Flood Hazard Reduction Plan Updates (FHRPs):** The King County Flood Hazard Reduction Plan is a regional plan prepared in accordance with RCW 86.12.200 and in collaboration with cities for the purpose of reducing flood hazards. It includes (1) policies to guide floodplain land use and flood hazard reduction activities; (2) program and project recommendations, including capital improvement projects, maintenance, relocation and elevation of homes, flood warning improvements, and river planning activities; (3) implementation priorities for program and project recommendations; and (4) an analysis of major financing alternatives and issues. Future updates of the FHRP may contain additional flood hazard reduction requirements.
- **Shared Facility Drainage Plans (SFDPs):** SFDPs are approved by King County to allow two or more projects to share drainage facilities required by this manual. Projects covered by a SFDP must meet any specific requirements of that plan.

Threshold	Requirement
IF a proposed project is in a designated ***Critical Drainage Area*** or in an area included in an adopted master drainage plan, basin plan, salmon conservation plan, stormwater compliance plan, flood hazard reduction plan, lake management plan, or shared facility drainage plan . . .	THEN the proposed project shall comply with the drainage requirements of the ***Critical Drainage Area***, master drainage plan, basin plan, salmon conservation plan, stormwater compliance plan, flood hazard reduction plan, lake management plan, or shared facility drainage plan, respectively.

DRAFT

Application of this Requirement

The drainage requirements of adopted CDAs, MDPs, BPs, SCPs, SWCPs, FHRPs, LMPs, and SFDPs shall be applied in addition to the drainage requirements of this manual unless otherwise specified in the adopted regulation. Where conflicts occur between the two, the drainage requirements of the adopted area-specific regulation shall supersede those in this manual.

Examples of drainage requirements found in other adopted area-specific regulations include the following:

- More or less stringent flow control
- More extensive water quality controls
- Forest retention requirements
- Infiltration restrictions
- Groundwater recharge provisions
- Discharge to a constructed regional flow control or conveyance facility.

Adjustments to vary from the specific drainage requirements mandated by CDAs, BPs, SCPs, SWCPs, FHRPs, and LMPs may be pursued through the adjustment process described in Section 1.4 of this manual. Copies of all adopted CDAs, basin plans, SCPs, SWCPs, FHRPs, and lake management plans are available from DNRP or DDES.

Projects covered by SFDPs shall demonstrate that the shared facility will be available by the time the project is constructed and that all onsite requirements are met. Projects covered by a SFDP are still required to provide any onsite controls necessary to comply with drainage requirements not addressed by the shared facility.

1.3.2 SPECIAL REQUIREMENT #2: FLOOD HAZARD AREA DELINEATION

Flood hazard areas are composed of the 100-year floodplain, zero-rise flood fringe, zero-rise floodway, FEMA floodway, and channel migration zones as described in KCC 21A.24. If a proposed project contains or is adjacent to a ***flood hazard area*** as determined by DDES, this special requirement requires the project to determine those components that are applicable and delineate them on the project's site improvement plans and recorded maps.

Floodplains are subject to inundation during extreme events. The 100-year floodplain, and floodway if applicable, is delineated in order to minimize flooding impacts to new development and to prevent aggravation of existing flooding problems by new development. Regulations and restrictions concerning development within a 100-year floodplain are found in the critical areas code, KCC 21A.24.

Channel migration zones are areas within the lateral extent of likely stream channel movement that are subject to risk due to stream bank destabilization, rapid stream incision, stream bank erosion and shifts in the location of stream channels, as shown on King County's Channel Migration Zone maps. The channel migration zone includes two additional components, the *severe channel migration hazard area*, which includes the present channel width plus the area at greatest risk of lateral movement, and the *moderate channel migration hazard area*, which is the remaining portion of the channel migration zone. Regulations and restrictions concerning development within channel migration zones and their hazard area components are found in the critical areas code, KCC 21A.24.

Threshold	Requirement
IF a proposed project contains or is adjacent to a ***flood hazard area*** for a river, stream, lake, wetland, closed depression, marine shoreline, or a King County-mapped channel migration zone, or if other King County regulations require study of flood hazards related to the proposed project . . .	THEN the 100-year floodplain, and floodway if applicable, shall be determined and their boundaries, together with the boundaries of the severe and moderate channel migration hazard area (if applicable), shall be delineated on the site improvement plans and profiles, and on any final subdivision maps prepared for the proposed project.

DRAFT

Application of this Requirement

The applicant is required to use the best available floodplain/floodway data when delineating the 100-year floodplain and floodway boundaries on site improvement plans and profiles, and on any final subdivision maps. The **floodplain/floodway delineation** used by the applicant shall be in accordance with KCC 21A.24 and associated public rules. If floodplain/floodway data and delineation does not exist, then a floodplain/floodway analysis shall be prepared by the applicant as described in Section 4.4.2, "Floodplain/Floodway Analysis."

If the ***site*** is located within a **channel migration zone** mapped by King County, the proposed development must comply with KCC 21A.24 and associated public rules.

1.3.3 SPECIAL REQUIREMENT #3: FLOOD PROTECTION FACILITIES

Flood protection facilities, such as **levees** and **revetments** require a high level of confidence in their structural integrity and performance. Proper analysis, design, and construction are necessary to protect against the potentially catastrophic consequences if such facilities should fail.

Threshold	Requirement
IF a proposed project will: • rely on an existing flood protection facility (such as a levee or revetment) for protection against hazards posed by erosion or inundation, OR • modify or construct a new flood protection facility . . .	THEN the applicant shall demonstrate that the flood protection facility conforms with siting, structural stability, environmental, and all other relevant standards set forth in the following regulations and requirements: • Federal Emergency Management Agency (FEMA) regulations (44 CFR), • Washington State *Integrated Streambank Protection Guidelines*, • Corps of Engineers *Manual for Design and Construction of Levees* (EM 1110-2-1913), • KCC 21A.24, and • Special Requirement #1 (specifically the King County Flood Hazard Reduction Plan); AND, flood containment levees intended to provide 100-year flood containment shall be certified per standards of the FEMA regulations (44 CFR).

DRAFT

Application of this Requirement

The applicant is required to demonstrate conformance with FEMA regulations using the methods specified in Section 4.4.2. If the flood protection facility is a 100-year flood containment levee, the facility must be certified by a ***civil engineer*** to comply with FEMA standards in CFR 44.

Conformance with the other regulations and requirements listed above shall be addressed in the Technical Information Report submitted with the project's engineering plans (see Section 2.3.1.1).

Conformance also requires that certain **easement requirements** (outlined in Section 4.1) be met in order to allow County access to the facility. If the proposed project contains an existing King County flood protection facility or proposes to rely on a King County flood protection facility, the applicant shall provide an easement to King County consistent with the river protection easement requirements outlined in Section 4.1.

1.3.4 SPECIAL REQUIREMENT #4: SOURCE CONTROLS

Water quality source controls prevent rainfall and runoff water from coming into contact with pollutants, thereby reducing the likelihood that pollutants will enter public waterways and violate water quality standards or County stormwater discharge permit limits. A *Stormwater Pollution Prevention Manual* was prepared for citizens, businesses, and industries to identify and implement source controls for activities that often pollute water bodies. King County provides advice about source control implementation upon request. The County may, however, require mandatory source controls at any time through formal code enforcement if complaints or studies reveal water quality violations or problems.

Threshold	Requirement
IF a proposed project requires a commercial building or commercial ***site*** development permit . . .	THEN water quality source controls applicable to the proposed project shall be applied as described below in accordance with the *King County Stormwater Pollution Prevention Manual* and King County Code 9.12.

Application of this Requirement

When applicable per the *Stormwater Pollution Prevention Manual*, **structural source control measures**, such as car wash pads or dumpster area roofing, shall be applied to the entire ***site*** containing the proposed project, not just the ***project site***. If the applicant is a tenant or lessee for only a portion of the ***site***, DDES may limit the entire ***site*** application of structural source controls to only that portion of the ***site*** occupied or leased by the applicant. All applicable structural source control measures shall be shown on the site improvement plans submitted for engineering review and approval. Other, **nonstructural source control measures**, such as covering storage piles with plastic or isolating areas where pollutants are used or stored, are to be implemented after occupancy and need not be addressed during the plan review process. All commercial, industrial, and multifamily projects (irrespective of size) undergoing drainage review are required to implement applicable source controls.

DRAFT

1.3.5 SPECIAL REQUIREMENT #5: OIL CONTROL

Projects proposing to develop or redevelop a ***high-use site*** must provide oil controls in addition to any other water quality controls required by this manual. Such ***sites*** typically generate high concentrations of oil due to high traffic turnover or the frequent transfer of oil.

The oil control requirement for ***high-use sites*** applies to all developments that generate high concentrations of oil, regardless of whether the project creates ***new impervious surface*** or makes ***site*** improvements to an existing ***high-use site***. The traffic threshold in the definition above focuses on vehicle turnover per square foot of building area (trip generation) rather than ADT alone because oil leakage is greatest when engines are idling or cooling. In general, all-day parking areas are not intended to be captured by these thresholds except those for diesel vehicles, which tend to leak oil more than non-diesel vehicles. The petroleum storage and transfer stipulation is intended to address regular transfer operations like service stations, not occasional filling of heating oil tanks.

Threshold	Requirement
IF a proposed project either: • develops a ***site*** that will have ***high-use site*** characteristics, OR • is a ***redevelopment project*** proposing $100,000 or more of improvements to an existing ***high-use site*** . . .	THEN the project must treat runoff from the high-use portion of the ***site*** using oil control treatment options from the High-Use menu (described below and detailed in Chapter 6).

DRAFT

High-Use Menu

High-use oil control options are selected to capture and detain oil and associated pollutants. The goal of this treatment is no visible sheen on runoff leaving the facility, or less than 10 mg/L total petroleum hydrocarbons (TPH) in the runoff, depending on the facility option used. Oil control options include facilities that are small, handle only a limited tributary area, and require frequent maintenance, as well as facilities that treat larger areas and generally have less frequent maintenance needs. Facility choices include catch basin inserts, linear sand filters, and oil/water separators. See Chapter 6 for specific facility choices and design details.

Application of this Requirement

For ***high-use sites*** located within a larger commercial center, only the impervious surface associated with the high-use portion of the ***site*** is subject to treatment requirements. If common parking for multiple businesses is provided, treatment shall be applied to the number of parking stalls required for the high-use business only. However, if the treatment collection area also receives runoff from other areas, the treatment facility must be sized to treat all water passing through it.

High-use roadway intersections shall treat lanes where vehicles accumulate during the signal cycle, including left and right turn lanes and through lanes, from the beginning of the left turn pocket (see Figure 1.3.5.A below). If no left turn pocket exists, the treatable area shall begin at a distance equal to three car-lengths from the stop line. If runoff from the intersection drains to more than two collection areas that do not combine within the intersection, treatment may be limited to any two of the collection areas.

Note: For oil control facilities to be located in public road right-of-way and maintained by King County, only coalescing plate or baffle oil/water separators shall be used unless otherwise approved through an adjustment.

Methods of Analysis

The traffic threshold for the High-Use menu shall be estimated using information from *Trip Generation*, published by the Institute of Transportation Engineers, or from a traffic study prepared by a professional engineer or transportation specialist with experience in traffic estimation.

FIGURE 1.3.5.A TREATABLE AREAS FOR HIGH-USE ROAD INTERSECTIONS

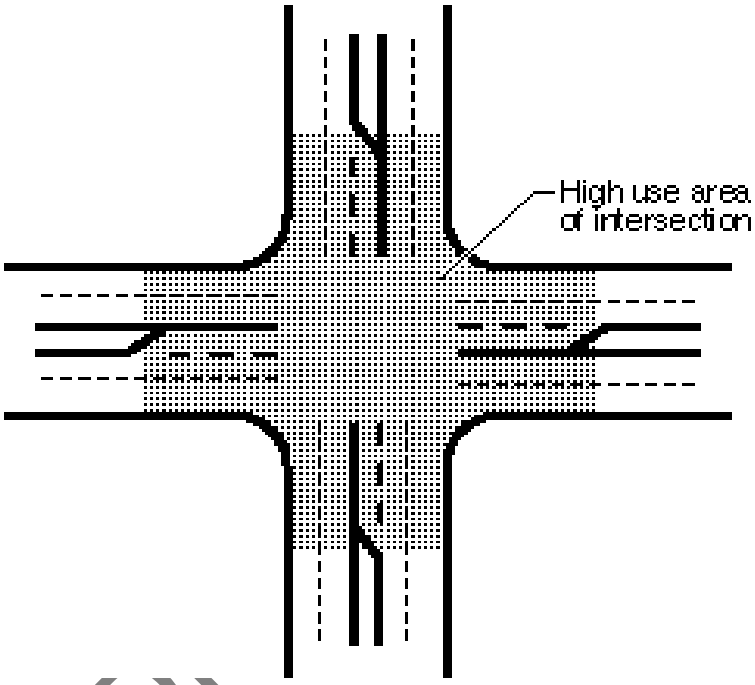

DRAFT

1.4 ADJUSTMENT PROCESS

For proposed projects subject to drainage review by the Department of Development and Environmental Services (DDES), this process is provided for the occasions when a project proponent desires to vary from one of the core or special requirements, or any other specific requirement or standard contained in this manual. Proposed adjustments should be approved prior to final permit approval, but they may be accepted up to the time King County approves final construction or accepts drainage facilities for maintenance. The adjustment application form (one standard form serves all types of adjustments) is included in Reference Section 8-F.

Types of Adjustments

To facilitate the adjustment process and timely review of adjustment proposals, the following types of adjustments are provided:

- **Standard Adjustments:** These are adjustments of the standards and requirements contained in the following chapters and sections of this manual:
  - * Chapter 2, "Drainage Plan Submittal"
  - * Chapter 4, "Conveyance System Analysis and Design"
  - * Chapter 5, "Flow Control Design"
  - * Appendix C, *Small Project Drainage Requirements* (detached)
  - * Appendix D, *Erosion and Sediment Control Standards* (detached).

  Requests for standard adjustments will be accepted only for permits pending approval or approved permits that have not yet expired.

- **Complex Adjustments:** Complex adjustments typically require more in-depth review because they deal with more complicated requirements or requirements that affect basic County policies or other agencies. These adjustments apply to the requirements contained in the following chapters and sections of this manual:
  - * Chapter 1, "Drainage Review and Requirements"
  - * Chapter 3, "Hydrologic Analysis and Design"
  - * Chapter 6, "Water Quality Design"
  - * Appendix A, "Maintenance Requirements for Flow Control, Conveyance, and WQ Facilities"
  - * Appendix B, "Master Drainage Plans."

  Requests for complex adjustments will be accepted only for permits pending approval or approved permits that have not yet expired.

- **Preapplication Adjustments:** This type of adjustment may be requested when the applicant needs an adjustment decision to determine if a project is feasible or when the results are needed to determine if a project is viable before funding a full application. The approval of preapplication adjustments is tied by condition to the project proposal presented at a preapplication meeting with DDES.

- **Experimental Design Adjustments:** This type of adjustment is used for proposing new designs or methods that are not covered in this manual, that are not uniquely ***site*** specific, and that do not have sufficient data to establish functional equivalence.

- **Blanket Adjustments:** This type of adjustment may be established by the County based on approval of any of the above-mentioned adjustments. Blanket adjustments are usually based on previously approved adjustments that can be applied routinely or globally to all projects where appropriate. Blanket adjustments are also used to effect minor changes or corrections to manual design requirements or to add new designs and methodologies to this manual.

DRAFT

1.4.1 ADJUSTMENT AUTHORITY

The Department of Development and Environmental Services (DDES) shall have full authority to determine if and what type of adjustment is required for any proposed project subject to drainage review by DDES. The authority to grant adjustments for such projects is distributed as follows:

- DDES shall have full authority to approve or deny standard, complex, and preapplication adjustments, except those involving outfalls or pump discharges to the Green River between River Mile 6 and SR 18 per Section 1.2.4.2.F and 1.2.4.2.I. DDES decisions on those adjustments are subject to approval by the ~~Green River~~King County Flood Control Zone District.
- DNRP shall have full authority to approve or deny experimental design adjustments.
- Both DDES and DNRP must approve blanket adjustments.

At any time, this adjustment authority may be transferred between DDES and DNRP through a memorandum or an amendment to this manual. This memorandum or amendment must include specific guidelines for deferral of adjustment authority.

1.4.2 CRITERIA FOR GRANTING ADJUSTMENTS

Adjustments to the requirements in this manual may be granted provided that granting the adjustment will achieve the following:

1. Produce a compensating or comparable result that is in the public interest, AND
2. Meet the objectives of safety, function, appearance, environmental protection, and maintainability based on sound engineering judgment.

Also, the granting of any adjustment that would be in conflict with the requirements of any other King County department will require review and concurrence with that department.

DRAFT

Criteria Exception

~~Where it has been~~If it can be demonstrated that meeting the above criteria for producing a compensating or comparable result will deny reasonable use of a property, approval of the adjustment will require an adjustment **criteria exception** to be approved by the director of DDES or DNRP (whoever is approving the adjustment). An adjustment that requires a criteria exception may be granted following legal public notice of the adjustment request, the director's proposed decision on the request, and a written finding of fact that documents the following:

1. There are special physical circumstances or conditions affecting the property such that strict application of the criteria for producing a compensating or comparable result would deprive the applicant of all reasonable use of the parcel of land in question, and every effort has been made to find creative ways to meet the intent of the requirement for which the adjustment is sought, AND
2. Granting the adjustment for the individual property in question will not create a significant adverse impact to public health, welfare, water quality, and properties downstream or nearby, AND
3. The adjustment requires the best practicable alternative for achieving the spirit and intent of the requirement in question.

In addition, the written finding of fact must include the following information as required by the State Department of Ecology per King County's 2007 NPDES General Municipal Stormwater Permit:

- The current (pre-project) use of the ***site***.
- How application of the requirement for which an adjustment is being requested denies reasonable use of the ***site*** compared to the restrictions that existed under the 2005 *Surface Water Design Manual*.
- The possible remaining uses of the ***site*** if the criteria exception were not granted.

- The uses of the ***site*** that would have been allowed under the 2005 *Surface Water Design Manual*.
- A comparison of the estimated amount and percentage of value loss as a result of the requirements of this manual versus the estimated amount and percentage of value loss as a result of requirements that existed under the 2005 *Surface Water Design Manual*.
- The feasibility for the owner to alter the project to apply the requirements of this manual.

~~the applicant shall produce the best practicable alternative as determined by the director of DDES. The director or his/her designee shall assess the case to affirm that denial of reasonable use would occur and to require the practicable alternative that best achieves the spirit and intent of the requirement. DDES staff shall provide recommendations to the director on the best practicable alternative to be required.~~

~~Granting any adjustment that would be in conflict with the requirements of any other King County department will require review and concurrence with that department.~~

Experimental Design Adjustments

Experimental design adjustments that request use of an experimental water quality facility or flow control facility will be approved by DNRP on a limited basis if, upon evaluation, DNRP agrees the following criteria are met:

1. The ~~new~~ experimental design is likely to meet the identified target pollutant removal goal or flow control performance based on limited data and theoretical considerations, AND
2. Construction of the facility can, in practice, be successfully carried out, AND
3. Maintenance considerations are included in the design, and costs are not excessive or are born and reliably performed by the applicant or property owner, AND
4. A share of the cost of monitoring to determine facility performance is contributed by the applicant or property owner.

Note that if the experimental design is a new water quality treatment technology, it must be approved through the state Department of Ecology's TAPE program[60] before the technology can be approved by King County.

Conditions for approval of ~~these~~ experimental design adjustments may include a requirement for setting aside an extra area and posting a financial guarantee for construction of a conventional facility should the experimental facility fail. Once satisfactory operation of the experimental facility is verified, the set aside area could be developed and the financial guarantee released.

DRAFT

1.4.3 ADJUSTMENT APPLICATION PROCESS

Standard and Complex Adjustments

The application process for standard and complex adjustments is as follows:

- Requests for standard and complex adjustments will be accepted only for permits pending approval or approved permits that have not yet expired.
- The completed adjustment request application forms must be submitted to DDES along with sufficient engineering information (described in Chapter 2) to evaluate the request. The application shall note the specific requirement for which the adjustment is sought.
- If the adjustment request involves use of a previously unapproved construction material or construction practice, the applicant should submit documentation that includes, but is not limited to, a record of successful use by other agencies and/or evidence of meeting criteria for quality and

[60] See Footnote No. 59 (p. 1-72).

performance, such as that for the American Association of State Highway and Transportation Officials (AASHTO) and the American Society of Testing and Materials (ASTM).

- If the adjustment requires a criteria exception, additional engineering or other information may be required by DDES to document that denial of reasonable use would occur, that every effort was made to achieve compliance, and that the best practicable alternative will not cause significant adverse impact.
- A fee reduction may be requested if it is demonstrated that the adjustment request requires little or no engineering review.

Preapplication Adjustments

The application process is the same as for standard and complex adjustments except that requests will be accepted prior to permit application, but only if:

- The applicant provides justification at a preapplication meeting with DDES that an adjustment decision is needed to determine the viability of the proposed project, AND
- Sufficient engineering information to evaluate the request is provided.

Experimental Design Adjustments

The application process is the same as for standard and complex adjustments except that requests will be accepted prior to permit application.

Blanket Adjustments

There is no application process for blanket adjustments because they are initiated and issued solely by the County.

DRAFT

1.4.4 ADJUSTMENT REVIEW PROCESS

All adjustments (a.k.a., variances from KCC 9.04) are classified as Type 1 land use decisions in King County Code, Title 20.20, and as such, are governed by the review procedures and time lines set forth in KCC 20.20. Consistent with these procedures, the general steps of the review process for specific types of adjustments are presented as follows.

Standard and Complex Adjustments

- DDES staff will review the adjustment request application forms and documentation for completeness and inform the applicant in writing as to whether additional information is required from the applicant in order to complete the review. The applicant will also be informed if DDES determines that special technical support is required from DNRP in cases where the adjustment involves a major policy issue or potentially impacts a DNRP drainage facility.
- The Land Use Services Division Manager/designee or Building Services Division Manager/designee of DDES will review and either approve or deny the adjustment request following DDES's determination that all necessary information has been received from the applicant.
- If a criteria exception is required for the adjustment, DDES will issue a legal public notice of the adjustment request that indicates the director's proposed decision on the request, including the written finding of fact specified in Section 1.4.2 (p. 1-84). The pubic notice will include a 15-working-day public comment period within which a request for reconsideration may be made to the DDES director as described in Section 1.4.5. Absent a request for reconsideration, the director's decision becomes final after the two week public comment period.
- Approvals of standard and complex adjustments will expire upon expiration of the permit to which they apply.

Preapplication Adjustments

The review process is the same as for standard and complex adjustments except that approvals will expire one year after the approval date, unless a complete permit application is submitted and accepted, in which case the adjustment will expire at the same time as the permit to which it applies.

Experimental Design Adjustments

- DDES staff will refer requests for experimental design adjustments to DNRP staff, along with any recommendations.
- DNRP staff will review the submitted material and any DDES staff recommendations, and inform the applicant as to whether additional information is required in order to complete the review. DNRP will also give the applicant an estimate of the time needed to complete the review.
- If a criteria exception is required for the adjustment, DDES will issue a legal public notice of the adjustment request that indicates the DNRP's proposed decision on the request, including the written finding of fact specified in Section 1.4.2 (p. 1-84). The pubic notice will include a 15-working-day public comment period within which a request for reconsideration may be made to the DNRP director as described in Section 1.4.5. Absent a request for reconsideration, the director's decision becomes final after the 15-working-day public comment period.
- The DNRP director or designee will review and either approve or deny the adjustment request in writing.

Blanket Adjustments

Blanket adjustments will each be established by memorandum between DDES and DNRP based on:

1. A previously approved standard, complex, preapplication, or experimental design adjustment and supporting documentation, AND
2. Information presenting the need for the blanket adjustment. Typically, blanket adjustments should apply globally to design or procedural requirements and be independent of ***site*** conditions.

Both DDES and DNRP must approve a blanket adjustment.

DRAFT

1.4.5 REQUEST FOR RECONSIDERATION PROCEDURE

Although adjustment decisions, classified as Type 1 land use decisions, are not appealable per KCC 20.20, the applicant may request reconsideration of the denial or conditions of approval of an adjustment request by submitting a formal letter to the director of the department in which the decision was made within 15 working days of the decision. This letter must include justification for reconsideration of the decision, along with a copy of the adjustment request with the conditions (if applicable) and a list of all previously submitted material. The department director shall respond to the applicant in writing within 15 working days. The director's decision on the reconsideration request shall be final. A per-hour review fee will be charged to the applicant for County review of a reconsideration request.

Criteria Exceptions

A criteria exception decision for an adjustment is also a Type 1 land use decision and thus, is not appealable per KCC 20.20. However, because the public is given an opportunity to comment on a criteria exception decision, they may request reconsideration of the decision by submitting a formal letter to the director of the department in which the decision was made within 15 working days of the legal public notice. This letter must include justification for reconsideration of the decision, along with any supporting information/documentation. The department director shall respond to the letter in writing within 15 working days. The director's decision on the reconsideration request shall be final.

CHAPTER 2

DRAINAGE PLAN SUBMITTAL

KING COUNTY, WASHINGTON
SURFACE WATER DESIGN MANUAL

DRAFT

Section 2.1	**Plans for Permits and Drainage Review**	**2-3**
Section 2.1.1	Plans Required for Permit Submittal	2-3
Section 2.1.2	Plans Required for Drainage Review	2-3
Section 2.2	**Plans Required with Initial Permit Application**	**2-5**
Section 2.2.1	Subdivision, UPD, and Binding Site Plans	2-5
Section 2.2.2	Short Subdivisions	2-6
Section 2.2.3	Commercial Site Development	2-6
Section 2.2.4	Single family Residential	2-6
Section 2.2.5	Other Permits	2-6
Section 2.3	**Drainage Review Plan Specifications**	**2-7**
Section 2.3.1	Engineering Plan Specifications	2-7
Section 2.3.2	Projects in Targeted Drainage Review	2-32
Section 2.4	**Plans Required After Drainage Review**	**2-33**
Section 2.4.1	Plan Changes After Permit Issuance	2-33
Section 2.4.2	Final Corrected Plan Submittal	2-33
Section 2.4.3	Final Plat, Short Plat, and Binding Site Plan Submittals	2-33

DRAFT

CHAPTER 2

DRAINAGE PLAN SUBMITTAL

This chapter details the drainage related submittal requirements for engineering design plans as part of a permit application to the Department of Development and Environmental Services (DDES). The intent of these requirements is to present consistent formats for design plans and the technical support data required to develop the plans. These conventions are necessary to review engineering designs for compliance with King County ordinances and regulations, and to ensure the intent of the plan is easily understood and implemented in the field. Properly drafted design plans and supporting information also facilitate the construction, operation, and maintenance of the proposed system long after its review and approval. When plans comply with the formats and specifications contained herein, they facilitate review and approval with a minimum of time-consuming corrections and resubmittals.

Note that this chapter primarily describes how to submit drainage plans for review—what must be submitted, in what formats, at what times and to what offices. The basic drainage requirements that these plans must address are contained in Chapter 1, "Drainage Review and Requirements." The specific design methods and criteria to be used are contained in Chapters 3, 4, 5, and 6.

Several key forms used in the plan review process are reproduced in Reference Section 8, "Forms and Worksheets." The drainage submittal requirements for different types of developments are contained in this chapter with the exception of Master Drainage Plans, which are contained in a separate publication titled *Master Drainage Planning for Large or Complex Site Developments*, available from the King County Department of Natural Resources and Parks (DNRP) or DDES. For information on general requirements for any permit type and on the appropriate submittal location, refer to the **customer information bulletins** prepared by DDES for this purpose.

DRAFT

Chapter Organization

The information presented in this chapter is organized into four main sections as follows:

- Section 2.1, "Plans for Permits and Drainage Review" (p. 2-3)
- Section 2.2, "Plans Required with Initial Permit Application" (p. 2-5)
- Section 2.3, "Drainage Review Plan Specifications" (p. 2-7)
- Section 2.4, "Plans Required After Drainage Review" (p. 2-33).

These sections begin on odd pages so the user can insert tabs if desired for quicker reference.

DRAFT

2.1 PLANS FOR PERMITS AND DRAINAGE REVIEW

DDES is responsible for the review of all engineering aspects of private development proposals. Drainage review is a primary concern of engineering design. This section describes the **types of engineered drainage plans** required for engineering review at various permit review stages. *Refer to the DDES customer information bulletins for other details or requirements, such as the submittal and expiration periods set for each type of permit application, review fees, right-of-way use requirements, and other code requirements.*

2.1.1 PLANS REQUIRED FOR PERMIT SUBMITTAL

Most projects require some degree of drainage plans or analysis to be submitted with the initial permit application (see Table 2.1.2.A, p. 2-4). Subdivisions, urban plan developments (UPDs), and binding site plans require engineered **preliminary plans** be submitted with the initial permit application. Short plats require **plot plans** (may be engineered or non-engineered) to be submitted with the initial permit application. Preliminary plans and plot plans provide general information on the proposal, including location of critical areas, road alignments and right-of-way, ***site*** topography, building locations, land use information, and lot dimensions. They are used to determine the appropriate drainage conditions and requirements to be applied to the proposal during the drainage review process.

Single family residential building permits and short plats with one undeveloped lot require only a **site plan** with the initial permit application. Commercial permits require full **engineering plans** (see below). Other permits may have project specific drainage requirements determined by DDES or described in DDES customer information bulletins.

DRAFT

2.1.2 PLANS REQUIRED FOR DRAINAGE REVIEW

For drainage review purposes, **engineering plans** consist of the following:

1. **Site improvement plans** (see Section 2.3.1.2, p. 2-18), which include all plans, profiles, details, notes, and specifications necessary to construct road, drainage, and off-street parking improvements.
2. A **construction stormwater pollution prevention plan (CSWPPP)**, which identifies the measures and BMPs required to prevent the discharge of sediment-laden water and other pollutants associated with construction/***land disturbing activities***. The CSWPPP includes two component plans: an **erosion and sediment control (ESC) plan** (see Section 2.3.1.3, p. 2-25), which addresses prevention of sediment-laden discharges; and a **stormwater pollution prevention and spill (SWPPS) plan** (see Section 2.3.1.4, p.2-28), which addresses prevention of other pollutant discharges.
3. A **technical information report (TIR)** (see Section 2.3.1.1, p. 2-8), which contains all the technical information and analysis necessary to develop the site improvement plan and CSWPPP.

Note: A landscape management plan is also included if applicable (see Section 2.3.1.5, p. 2-31).

Projects under Targeted Drainage Review usually require engineering plans, except that only certain sections of the technical information report are required to be completed and the site improvement plan may have a limited scope depending upon the characteristics of the proposed project. The scope of these plans should be confirmed during the **project predesign meeting** with DDES. For other permits, such as single family residential permits, the scope of the targeted engineering analysis is usually determined during DDES engineering review.

Projects without major drainage improvements may be approved to submit *a modified site improvement plan*. Major drainage improvements usually include water quality or flow control facilities, conveyance systems, bridges, and road right-of-way improvements. For projects requiring engineering plans for road construction, a **modified site improvement plan** is not allowed. See Section 2.3.1.2, (p. 2-18) for further information.

Plans Required for Small Project Drainage Review

Small project drainage plans are a simplified form of site improvement and ESC plans (without a TIR or a SWPPS plan) that may be prepared by a non-engineer from a set of pre-engineered design details. Small project drainage plans are only allowed for projects in Small Project Drainage Review but may be required for individual lots created by a subdivision project to show how required flow control BMPs and ESC measures will be applied to future lot construction.

For single family residential permits, the level and scope of drainage plan requirements are determined by DDES during drainage review. Some projects subject to Small Project Drainage Review may also require Targeted Drainage Review.

TABLE 2.1.2.A DRAINAGE PLAN SUBMITTALS

Type of Permit or Project	Plans Required with Initial Permit Application	Type of Drainage Review	Plans Required for Drainage Review
SUBDIVISIONS, UPDs, AND BINDING SITE PLANS	Plat Map(5) Preliminary Plans Level 1 Downstream Analysis	Full or Targeted Drainage Review(2)	• Preliminary Plans(5) • Engineering Plans(1)
		Large Project Drainage Review	• Preliminary Plans(5) • Master Drainage Plan(4) or Special Study • Engineering Plans(1)
SHORT PLATS	Plot Plan(5)	Small Project Drainage Review	Small Project Drainage Plans(3)
	Plot Plan(5) Level 1 Downstream Analysis	Small Project Drainage Review AND Targeted Drainage Review(2)	• Small Project Drainage Plans(3) • Engineering Plans(1)
		Full or Targeted Drainage Review(2)	Engineering Plans(1)
COMMERCIAL PERMITS	Engineering Plans(1),(2)	Full or Targeted Drainage Review	Engineering Plans(1)
SINGLE FAMILY RESIDENTIAL BUILDING PERMITS OR PERMITS FOR AGRICULTURAL PROJECTS	Site Plan(5) for Single Family Residential Building Permits Site Plan(5) or other project-specific plan as specified by DDES for ***agricultural projects***	Small Project Drainage Review	Small Project Drainage Plans(3)
		Small Project Drainage Review AND Targeted Drainage Review(2)	• Small Project Drainage Plans(3) • Engineering Plans(1)
		Full or Targeted Drainage Review(2)	Engineering Plans(1)
OTHER PROJECTS OR PERMITS	Project-specific (contact DDES or use DDES customer information bulletins)	Full or Targeted Drainage Review(2)	Engineering Plans(1)

Notes:

(1) Submittal specifications for **engineering plans** are detailed in Section 2.3.1 (p. 2-7).

(2) Submittal specifications for **Targeted Drainage Review** are found in Section 2.3.2 (p. 2-32).

(3) Specifications for submittal of **small project drainage plans** are found in Appendix C, *Small Project Drainage Requirements* (detached).

(4) Specifications for submittal of **master drainage plans or special studies** are found in the King County publication titled *Master Drainage Planning for Large or Complex Site Developments.*

(5) Submittal specifications for these plans are found in the application packages and in DDES Customer information Bulletins.

DRAFT

2.2 PLANS REQUIRED WITH INITIAL PERMIT APPLICATION

This section describes the submittal requirements for initial permit applications at DDES. The **timing for submittal** of engineering plans will vary depending on permit type. For subdivisions and short plats, this submittal usually follows the County's approval of preliminary plans. For commercial building permits, engineering plans must be submitted as part of the initial permit application. For other permit types the drainage plan requirements are determined during the permit review process.

Note: If engineering plans are required to be submitted with the initial permit application, they must be accompanied by the appropriate supporting documents (e.g., required application forms, an environmental checklist, etc.). For more details, see DDES's customer information bulletins.

Design Plan Certification

All preliminary plans and engineering plans must be stamped by a ***civil engineer***.

All land boundary surveys and legal descriptions used for preliminary and engineering plans must be stamped by a **land surveyor** licensed in the State of Washington. Topographic survey data and mapping prepared specifically for a proposed project may be performed by the ***civil engineer*** stamping the engineering plans as allowed by the Washington State Board of Registration for Professional Engineers and Land Surveyors.

2.2.1 SUBDIVISION, UPD, AND BINDING SITE PLANS

DRAFT

Applications for proposed subdivision, UPD, and binding site plan projects must include engineered **preliminary plans**, which are used to help determine engineering plan requirements to recommend to the Hearing Examiner. Preliminary plans shall include the following:

1. **A conceptual drainage plan** prepared, stamped, and signed by a ***civil engineer***. This plan must show the location and type of the following:

   a) Existing and proposed flow control facilities

   b) Existing and proposed water quality facilities

   c) Existing and proposed conveyance systems.

   The level of detail of the plan should correspond to the complexity of the project.

2. **A Level 1 Downstream Analysis** as required in Core Requirement #2 and outlined under "TIR Section 3, Offsite Analysis" (p. 2-9). This offsite analysis shall be submitted in order to assess potential offsite drainage impacts associated with development of the project, and to help propose appropriate mitigation of those impacts. A higher level of offsite analysis may be requested by DDES prior to preliminary approval, or as a condition of engineering plan submittal. The offsite analysis must be prepared, stamped, and signed by a ***civil engineer***.

3. **Survey/topographic information.** The submitted ***site*** plan and conceptual drainage plan shall include the following:

   a) Field topographic base map to accompany application (aerial topography allowed with DDES permission)

   b) Name and address of surveyor and surveyor's seal and signature

   c) Notation for field or aerial survey

   d) Datum and benchmark/location and basis of elevation

e) Location of all critical areas (include the King County designation number, or identify as undesignated)

f) Contour intervals per the following chart:

Zoning Designation	Contour Intervals
Densities of developed area of over 2 DU per acre	2 feet at less than 15% slope 5 feet at 15% slope or more
Densities of developed area of 2 DU or less per acre	5 feet

2.2.2 SHORT SUBDIVISIONS

Applications for proposed short plats[1] require a **plot plan** (simplified preliminary plan) and a **Level 1 Downstream Analysis**. Plot plans are usually engineered, except for projects exempt from drainage review or projects subject to Small Project Drainage Review for the entire project. The specifications for submittal of plot plans are outlined in DDES customer information bulletins.

The Level 1 Downstream Analysis is required for all short plats except those meeting the exemptions outlined in Section 1.2.2 or those subject to Small Project Drainage Review for the entire project. A higher level of offsite analysis may be requested by DDES prior to preliminary approval, or as a condition of engineering plan submittal.

DRAFT

2.2.3 COMMERCIAL SITE DEVELOPMENT

Applications for commercial permits require that **engineering plans** be submitted as part of the initial permit application. Most commercial projects will go through Full Drainage Review and require complete engineering plans. Projects that qualify for limited scope engineering design should request Targeted Drainage Review during the preapplication meeting with DDES.

2.2.4 SINGLE FAMILY RESIDENTIAL

Applications for single family residential permits[1] require a non-engineered **site plan** to be submitted. The specifications for ***site*** plans are outlined in DDES customer information bulletins.

2.2.5 OTHER PERMITS

Other permit applications[1] will require project-specific information. Initial submittal requirements can be obtained by contacting DDES or consulting the DDES customer information bulletins.

[1] The specific level of required drainage analysis and design is usually determined during the preliminary drainage review of the plans submitted with the application. The overall plan review process may be expedited if the project is submitted with the appropriate level of detail.

2.3 DRAINAGE REVIEW PLAN SPECIFICATIONS

This section presents the specifications and contents required of plans to facilitate drainage review. Most projects subject to **Full Drainage Review** will require engineering plans that include a "technical information report (TIR)," "site improvement plans," and a "construction stormwater pollution prevention plan (CSWPPP)," which includes an "erosion and sediment control (ESC) plan" and a "stormwater pollution prevention and spill (SWPPS) plan." In addition, a "landscape management plan" may also be required to comply with Core Requirement #8 (see Section 1.2.8). For more information on the types of projects subject to Full Drainage Review, see Section 1.1.2.3.

Small projects with specific drainage concerns that are subject to **Targeted Drainage Review** also require engineering plans that include the same elements, except that the TIR may be of limited scope. The site improvement plans and ESC plans may also be of limited scope, but must meet all applicable specifications. For more information on the types of projects subject to Targeted Drainage Review, see Section 1.1.2.2.

Projects subject to **Small Project Drainage Review** may be required to submit "small project drainage plans." These are simplified drainage and erosion control plans that may be prepared by a non-engineer from a set of pre-engineered design details, and which do not require a TIR or a SWPPS plan. The *Small Project Drainage Requirements* booklet available at DDES and appended to this manual (detached Appendix C) contains the specifications for small project drainage plans and details on the Small Project Drainage Review process.

Note: Projects in Small Project Drainage Review may be required to submit engineering plans if they are also subject to Targeted Drainage Review as determined in Section 1.1.2.2 and Appendix C. Also, short plats in Small Project Drainage Review will be required to submit engineering plans if roadway construction is a condition of preliminary approval.

DRAFT

Design Plan Certification

All preliminary plans and engineering plans must be stamped by a ***civil engineer***.

All land boundary surveys, and legal descriptions used for preliminary and engineering plans must be stamped by a **land surveyor** licensed in the State of Washington. Topographic survey data and mapping prepared specifically for a proposed project may be performed by the ***civil engineer*** stamping the engineering plans as allowed by the Washington State Board of Registration for Professional Engineers and Land Surveyors.

2.3.1 ENGINEERING PLAN SPECIFICATIONS

For drainage review purposes, **engineering plans** must consist of the following:

1. A **TIR** as detailed in Section 2.3.1.1 (p. 2-8), AND
2. **Site improvement plans** as detailed in Section 2.3.1.2 (p. 2-18), AND
3. A **CSWPPP**, which includes an ESC plan as detailed in Section 2.3.1.3 (p. 2-25) and a SWPPS plan as detailed in Section 2.3.1.4 (p. 2-28).

Also, if applicable per Section 1.2.8, a **landscape management plan,** as detailed in Section 2.1.1.1 (p. 2-31), must be included.

Projects in Targeted Drainage Review require a limited scope TIR with site improvement plans and an ESC plan, as detailed in Section 2.3.2 (p. 2-32). DDES may allow a modified site improvement plan for some projects in Targeted Drainage Review (see Section 2.3.2, p. 2-32) or where major improvements (e.g., detention facilities, conveyance systems, bridges, road right-of-way improvements, etc.) are not proposed.

2.3.1.1 TECHNICAL INFORMATION REPORT (TIR)

The full TIR should be a comprehensive supplemental report containing all technical information and analysis necessary to develop the site improvement plan. This report should contain all calculations, conceptual design analysis, reports, and studies required and used to construct a complete site improvement plan based on sound engineering practices and careful geotechnical and hydrological design. The TIR must be stamped and dated by a ***civil engineer***.

The TIR shall contain the following **ten sections**, preceded by a table of contents:

1. Project Overview
2. Conditions and Requirements Summary
3. Offsite Analysis
4. Flow Control and Water Quality Facility Analysis and Design
5. Conveyance System Analysis and Design
6. Special Reports and Studies
7. Other Permits
8. CSWPPP Analysis and Design
9. Bond Quantities, Facility Summaries, and Declaration of Covenant
10. Operations and Maintenance Manual.

Every TIR must contain each of these sections; however, if a section does not apply, the applicant may simply mark "N/A" with a brief explanation. This standardized format allows a quicker, more efficient review of information required to supplement the site improvement plan.

The **table of contents** should include a list of the ten section headings and their respective page numbers, a list of tables with page numbers, and a list of numbered references, attachments, and appendices.

When the TIR package requires **revisions**, the revisions must be submitted in a complete TIR package.

DRAFT

❑ TIR SECTION 1 PROJECT OVERVIEW

The project overview must provide a general description of the proposal, predeveloped and developed ***site*** conditions, ***site*** and ***project site*** area, size of the improvements, and the disposition of stormwater runoff before and after development. The overview shall identify and discuss difficult ***site*** parameters, the natural drainage system, and drainage to and from adjacent property, including bypass flows.

The following figures are required:

Figure 1. TIR Worksheet

Include a copy of the TIR Worksheet (see Reference Section 8-A).

Figure 2. Site Location

Provide a map that shows the general location of the ***site***. Identify all roads that border the ***site*** and all significant geographic features and critical areas (lakes, streams, steep slopes, etc.).

Figure 3. Drainage Basins, Subbasins, and Site Characteristics

This figure shall display the following:

1. Show acreage of subbasins.
2. Identify all ***site*** characteristics.
3. Show existing discharge points to and from the ***site***.

4. Show routes of existing, construction, and future flows at all discharge points and downstream hydraulic structures.
5. Use a minimum USGS 1:2400 topographic map as a base for the figure.
6. Show (and cite) the length of travel from the farthest upstream end of a proposed storm system in the development to any proposed flow control facility.

Figure 4. Soils

Show the soils within the following areas:

1. The ***project site***
2. The area draining to the ***site***
3. The drainage system downstream of the ***site*** for the distance of the downstream analysis (see Section 1.2.2).

Copies of King County Soil Survey **maps** may be used; however, if the maps do not accurately represent the soils for a proposed project (including offsite areas of concern), it is the design engineer's responsibility to ensure that the actual soil types are properly mapped. Soil classification symbols that conform to the *SCS Soil Survey for King County* shall be used; and the equivalent KCRTS soil type (till, outwash, or wetlands) shall be indicated (see Table 3.2.2.B).

Subdivision projects may need to evaluate the soils on each lot for applicability of the full infiltration flow control BMP as specified in Section 5.2. This soils report, as well as geotechnical investigations necessary for proposed infiltration facilities, should be referenced in the TIR Overview and submitted under Special Reports and Studies, TIR Section VI. A figure in the required geotechnical report that meets the above requirements may be referenced to satisfy 1, 2, and 3 above.

DRAFT

❑ TIR SECTION 2
CONDITIONS AND REQUIREMENTS SUMMARY

The intent of this section is to ensure all preliminary approval conditions and applicable requirements pertaining to ***site*** engineering issues have been addressed in the site improvement plan. All conditions and requirements for the proposed project should be included.

In addition to the core requirements of this manual, adopted basin plans and other plans as listed in Special Requirement #1 should be reviewed and applicable requirements noted. Critical area requirements, conditions of plat approval, and conditions associated with development requirements (e.g., conditional use permits, rezones, variances and adjustments, SEPA mitigations, etc.) should also be included.

❑ TIR SECTION 3
OFFSITE ANALYSIS

All projects in engineering review shall complete, at a minimum, an Offsite Analysis, except for projects meeting the exemptions outlined in Section 1.2.2. The Offsite Analysis is usually completed as part of the initial permit application and review process, and is to be included in the TIR. *Note: If offsite conditions have been altered since the initial submittal, a new offsite analysis may be required.*

The primary component of the offsite analysis is the **downstream analysis** described in detail below. Upstream areas are included in this component to the extent they are expected to be affected by backwater effects from the proposed project. Other components of the offsite analysis could include, but are not limited to, evaluation of impacts to fish habitat, groundwater levels, groundwater quality, or other environmental features expected to be significantly impacted by the proposed project due to its size or proximity to such features.

Levels of Analysis

The offsite analysis report requirements vary depending on the specific ***site*** and downstream conditions. Each project submittal shall include at least a Level 1 downstream analysis. Upon review of the Level 1 analysis, DDES may require a Level 2 or Level 3 analysis. If conditions warrant, additional, more detailed analysis may be required. *Note: Potential impacts upstream of the proposal shall also be evaluated*.

Level 1 Analysis

The Level 1 analysis is a qualitative survey of each downstream system leaving a ***site***. This analysis is required for all proposed projects and shall be submitted with the initial permit application. Depending on the findings of the Level 1 analysis, a Level 2 or 3 analysis may need to be completed or additional information may be required. If further analysis is required, the applicant may schedule a meeting with DDES staff.

Level 2 or 3 Analysis

If problems are identified in the Level 1 analysis, a Level 2 (rough quantitative) analysis or a Level 3 (more precise quantitative) analysis may be required to further evaluate proposed mitigation for the problem. DDES staff will determine whether a Level 2 or 3 analysis is required based on the evidence of existing or potential problems identified in the Level 1 analysis and on the proposed design of onsite drainage facilities. The Level 3 analysis is required when results need to be as accurate as possible: for example, if the ***site*** is flat; if the system is affected by downstream controls; if minor changes in the drainage system could flood roads or buildings; or if the proposed project will contribute more than 15 percent of the total peak flow to the drainage problem location. The Level 2 or 3 analysis may not be required if DDES determines from the Level 1 analysis that adequate mitigation will be provided.

Additional Analysis

Additional, more detailed hydrologic analysis may be required if DDES determines that the downstream analysis has not been sufficient to accurately determine the impacts of a proposed project on an existing or potential drainage problem. This more detailed analysis may include a **point of compliance analysis** as detailed in Section 3.3.6.

DRAFT

Scope of Analysis

Regardless of the level of downstream analysis required, the applicant shall define and map the study area (Task 1), review resources (Task 2), inspect the study area (Task 3), describe the drainage system and problems (Task 4), and propose mitigation measures (Task 5) as described below.

Task 1. Study Area Definition and Maps

For the purposes of Task 2 below, the study area shall extend downstream one mile (minimum flowpath distance) from the proposed project discharge location and shall extend upstream as necessary to encompass the offsite drainage area tributary to the proposed ***project site***. **For the purposes of Tasks 3, 4, and 5,** the study area shall extend downstream to a point on the drainage system where the proposed ***project site*** constitutes less than 15 percent of the total tributary drainage area, but not less than one-quarter mile (minimum flowpath distance). The study area shall also extend upstream of the ***project site*** a distance sufficient to preclude any back water effects from the proposed project.

The offsite analysis shall include (1) a **site map** showing property lines, and (2) the **best available topographical map** (e.g., from DDES, Department of Transportation map Counter, Sewer District, or at a minimum a USGS 1:24000 Quadrangle Topographic map) with the study area boundaries, ***site*** boundaries, downstream flowpath, and potential/existing problems (Task 4) shown. Other maps, diagrams, and photographs such as aerial photos may be helpful in describing the study area.

Task 2. Resource Review

To assist the design engineer in preparing an offsite analysis, King County has gathered information regarding existing and potential flooding and erosion problems. For all levels of analysis, all of the

resources described below shall be reviewed for existing/potential problems in the study area (*upstream and one mile downstream of the* ***project site***):

- Adopted **basin plans** available at DDES, DNRP, and the library.
- Finalized **drainage studies** available at DNRP Water and Land Resources Division.
- **Basin Reconnaissance Summary Reports** and 1"=400' scale problem summary maps available at DDES, DNRP, and the library.
- ***Critical Drainage Area*** maps available at DDES.
- Floodplain/floodway (**FEMA**) **maps** available at DDES and the library.
- Other **offsite analysis reports** in the same subbasin, if available (check with DDES records staff).
- **Sensitive Areas Folio** available at DDES, DNRP, and the library (see also "Sensitive Areas" on the iMap website: http://www.metrokc.gov/gis/mapportal/iMAP_main.htm# or its successor for critical areas) must be used to document the distance downstream from the proposed project to the nearest critical areas.
- DNRP **drainage complaints**[2] **and studies** available at DNRP Water and Land Resources Division, phone: 206-296-1900 (see also "Stormwater" on the iMap website: http://www.metrokc.gov/gis/mapportal/iMAP_main.htm#).
- **Road drainage problems** (check with the KCDOT Roads Maintenance and Operations Division).
- U.S. Department of Agriculture, *King County Soils Survey* available at DDES and the library.
- **Wetlands Inventory** maps available at DDES and DNRP.
- **Migrating river studies** available at DDES and the DNRP Water and Land Resources Division.

Potential/existing problems identified in the above documents shall be documented in the **Drainage System Table** (see Reference Section 8-B) as well as described in the text of the **Level 1 Downstream Analysis Report**. If a document is not available for the ***site***, note in the report that the information was not available as of a particular date. If necessary, additional resources are available from King County, the Washington State Department of Fisheries and Wildlife (WDFW), the State Department of Ecology (DOE), the United States Army Corps of Engineers (Corps), and the public works departments of other municipalities in the vicinity of the proposed ***project site***.

DRAFT

Task 3. Field Inspection

The design engineer shall physically inspect the existing on- and offsite drainage systems of the study area for each discharge location. Specifically, he/she shall investigate any evidence of the following existing or potential problems and drainage features:

Level 1 Inspection:

1. Investigate any problems reported or observed during the resource review.
2. Locate all existing/potential constrictions or lack of capacity in the existing drainage system.
3. Identify all existing/potential downstream drainage problems as defined in Section 1.2.2.1.
4. Identify existing/potential overtopping, scouring, bank sloughing, or sedimentation.
5. Identify significant destruction of aquatic habitat or organisms (e.g., severe siltation, bank erosion, or incision in a stream).
6. Collect qualitative data on features such as land use, impervious surfaces, topography, and soil types.
7. Collect information on pipe sizes, channel characteristics, drainage structures, and relevant

[2] *Note: drainage complaints that are more than 10 years old are not required for Level 1 downstream analysis.*

critical areas (e.g., wetlands, streams, steep slopes).

8. Verify tributary basins delineated in Task 1.
9. Contact neighboring property owners or residents in the area about past or existing drainage problems, and describe these in the report (optional).
10. Note the date and weather conditions at the time of the inspection.

Level 2 or 3 Inspection:

1. Perform a Level 1 Inspection.
2. Document ***existing site conditions*** (approved drainage systems or pre-1979 aerial photographs) as defined in Core Requirement #3.
3. Collect quantitative field data. For Level 2, collect non-survey field data using hand tapes, hand reel, and rods; for Level 3, collect field survey profile and cross-section topographic data prepared by an experienced surveyor.

Task 4. Drainage System Description and Problem Descriptions

Each drainage system component and problem shall be addressed in the offsite analysis report in three places: on a map (Task 1), in the narrative (Task 4), and in the *Offsite Analysis Drainage System Table* (see Reference Section 8-B).

Drainage System Descriptions: The following information about drainage system components such as pipes, culverts, bridges, outfalls, ponds, tanks, and vaults shall be included in the report:

1. Location (corresponding map label and distance downstream/upstream from ***site*** discharge)
2. Physical description (type, size, length, slope, vegetation, and land cover)
3. Problems
4. Field observations.

Problem Descriptions: All existing or potential problems (e.g., ponding water, high/low flows, siltation, erosion, etc.) identified in the resource review or field inspection shall be described in the offsite analysis. These descriptions will help in determining if such problems are one of three defined problem types that require special attention per Core Requirement #2 (see Section 1.2.2.1). Special attention may include more analysis, additional flow control, or other onsite or offsite mitigation measures as specified by the problem-specific mitigation requirements set forth in Section 1.2.2.2.

The following information shall be provided for each existing or potential problem:

1. Description of the problem (ponding water, high or low flows, siltation, erosion, slides, etc.).
2. Magnitude of or damage caused by the problem (siltation of ponds, dried-up ornamental ponds, road inundation, flooded property, flooded building, flooded septic system, significant destruction of aquatic habitat or organisms).
3. General frequency and duration of problem (dates and times the problem occurred, if available).
4. Return frequency of storm or flow (cfs) of the water when the problem occurs (optional for Level 1 and required for Levels 2 and 3). *Note: A Level 2 or 3 analysis may be required to accurately identify the return frequency of a particular downstream problem; see Section 3.3.3.*
5. Water surface elevation when the problem occurs (e.g., elevation of building foundation, crest of roadway, elevation of septic drainfields, or wetland/stream high water mark).
6. Names and concerns of involved parties (optional for all levels of analysis).
7. Current mitigation of the problem.
8. Possible cause of the problem.

DRAFT

9. Whether the proposed project is likely to aggravate (increase the frequency or severity of) the existing problem or create a new one based on the above information. For example, an existing erosion problem should **not** be aggravated if Level 2 flow control is already required in the region for the design of onsite flow control facilities. Conversely, a downstream flooding problem inundating a home every 2 to 5 years will likely be aggravated if only Level 1 flow control is being applied in the region. See Section 1.2.3.1 for more details on the effectiveness of flow control standards in addressing downstream problems.

Task 5. Mitigation of Existing or Potential Problems

For any existing or potential offsite drainage problem determined to be one of the three defined problem types in Section 1.2.2.1, the design engineer must demonstrate that the proposed project neither aggravates (if existing) nor creates the problem as specified in the problem-specific mitigation requirements set forth in Section 1.2.2.2. To meet these requirements, the proposed project may need to provide additional onsite flow control as specified in Table 1.2.3.A (see also Section 3.3.5), or other onsite or offsite mitigation measures as described in Section 3.3.5.

❑ TIR SECTION 4
FLOW CONTROL AND WATER QUALITY FACILITY ANALYSIS AND DESIGN

Existing Site Hydrology (Part A)

This section of the TIR should include a discussion of assumptions and ***site*** parameters used in analyzing the existing ***site*** hydrology.

The acreage, soil types, and land covers used to determine existing flow characteristics, along with basin maps, graphics, and exhibits for each subbasin affected by the development, should be included.

The following information must be provided on a topographical map:

1. Delineation and acreage of areas contributing runoff to the ***site***
2. Flow control facility location
3. Outfall
4. Overflow route.

DRAFT

The scale of the map and the contour intervals must be sufficient to determine the basin and subbasin boundaries accurately. The direction of flow, the acreage of areas contributing drainage, and the limits of development should all be indicated on the map.

Each subbasin contained within or flowing through the ***site*** should be individually labeled and KCRTS parameters referenced to that subbasin.

All natural streams and drainage features, including wetlands and depressions, must be shown. Rivers, closed depressions, streams, lakes, and wetlands must have the 100-year floodplain (and floodway where applicable) delineated as required in Special Requirement #2 (see Section 1.3.2) and by the critical areas requirements in KCC 21A.24.

Developed Site Hydrology (Part B)

This section should provide narrative, mathematical, and graphical presentations of parameters selected and values used for the developed ***site*** conditions, including acreage, soil types and land covers, roadway layouts, and all constructed drainage facilities and any required flow control BMPs.

Developed subbasin areas and flows should be clearly depicted on a map and cross-referenced to computer printouts or calculation sheets. Relevant portions of the calculations should be highlighted and tabulated in a listing of all developed subbasin flows.

All maps, exhibits, graphics, and references used to determine developed ***site*** hydrology must be included, maintaining the same subbasin labeling as used for the existing ***site*** hydrology whenever possible. If the boundaries of the subbasin have been modified under the developed condition, the labeling should be modified accordingly (e.g., Subbasin "Am" is a modified version of existing Subbasin "A").

Performance Standards (Part C)

The design engineer shall include brief discussions of the following:

- The applicable **area-specific flow control facility standard** determined from the Flow Control Applications Map per Section 1.2.3.1, any modifications to the standard to address onsite or offsite drainage conditions, and applicable **flow control BMP requirements** determined from Sections 1.2.3.3 and 5.2;
- The applicable **conveyance system capacity standards** per Section 1.2.4; and
- The applicable **area-specific water quality treatment menu** determined from the Water Quality Applications Map per Section 1.2.8.1, and any applicable special requirements for **source control** or **oil control** determined from Sections 1.3.4 and 1.3.5.

Flow Control System (Part D)

This section requires an **illustrative sketch** of the flow control facility (or facilities), required flow control BMPs, and appurtenances. The facility sketch (or sketches) must show basic measurements necessary to calculate the storage volumes available from zero to the maximum head, all orifice/restrictor sizes and head relationships, control structure/restrictor orientation to the facility, and facility orientation on the ***site***. The flow control BMP sketch (or sketches) must show basic measurements and dimensions, orientation on the ***site***, flowpath lengths, etc.

The applicant should include all **supporting documentation** such as computer printouts, calculations, equations, references, storage/volume tables, graphs, and any other aides necessary to clearly show results and methodology used to determine the storage facility volumes. KCRTS facility documentation files, "Compare Flow Durations" files, peaks files, return frequency or duration curves, etc., should be included to verify the facility meets the performance standards indicated in Part C. The volumetric safety factor used in the design should be clearly identified, as well as the reasoning used by the design engineer in selecting the safety factor for this project. If **flow control BMP credits** are used as allowed in Section 5.2.2, documentation must be provided, explaining how the credits will be used and how the criteria for use of credits will be met.

DRAFT

Water Quality System (Part E)

This section provides an **illustrative sketch** of the proposed water quality facility (or facilities), source controls, oil controls, and appurtenances. This sketch (or sketches) of the facility, source controls, and oil controls must show basic measurements and dimensions, orientation on the ***site***, location of inflow, bypass, and discharge systems, etc.

The applicant should include all **supporting documentation** such as computer printouts, calculations, equations, references, and graphs necessary to show the facility was designed and sized in accordance with the specifications and requirements in Chapter 6. If the **water quality credit option** is used as allowed in Section 6.1.2, documentation must be provided, identifying the actions that will be taken to acquire the requisite credits.

❑ TIR SECTION 5
CONVEYANCE SYSTEM ANALYSIS AND DESIGN

This section should present a detailed analysis of any existing conveyance systems, and the analysis and design of the proposed stormwater collection and conveyance system for the development. This section would also include any analysis required for the design of bridges to convey flows and pass sediments and debris per Section 4.4.3. Analysis information should be presented in a clear, concise manner that can be easily followed, checked, and verified. All pipes, culverts, catch basins, channels, swales, and other stormwater conveyance appurtenances must be clearly labeled and correspond directly to the engineering plans.

The **minimum information** included shall be pipe flow tables, flow profile computation tables, nomographs, charts, graphs, detail drawings, and other tabular or graphic aides used to design and confirm performance of the conveyance system.

Verification of capacity and performance must be provided for each element of the conveyance system. The analysis must show design velocities and flows for all drainage facilities within the development, as well as those offsite that are affected by the development. If the final design results are on a computer printout, a separate summary tabulation of conveyance system performance should also be provided.

❑ TIR SECTION 6 SPECIAL REPORTS AND STUDIES

Some ***site*** characteristics, such as steep slopes or wetlands, pose unique road and drainage design problems that are particularly sensitive to stormwater runoff. As a result, King County may require the preparation of special reports and studies that further address the ***site*** characteristics, the potential for impacts associated with the development, and the measures that would be implemented to mitigate impacts. Special reports shall be prepared by people with expertise in the particular area of analysis. **Topics of special reports** may include any of the following:

- Floodplain delineation in accordance with Section 1.3.2
- Flood protection facility conformance in accordance with Section 1.3.3
- Critical areas analysis and delineation
- Geotechnical/soils
- Groundwater
- Slope protection/stability
- Erosion and deposition
- Geology
- Hydrology
- Fluvial geomorphology
- Anadromous fisheries impacts
- Water quality
- Structural design
- Structural fill.

DRAFT

❑ TIR SECTION 7 OTHER PERMITS

Construction of road and drainage facilities may require additional permits from other agencies for some projects. These additional permits may contain more restrictive drainage plan requirements. This section of the TIR should provide the titles of any other permits, the agencies requiring the other permits, and the permit requirements that affect the drainage plan. Examples of other permits are listed in Section 1.1.3.

❑ TIR SECTION 8 CSWPPP ANALYSIS AND DESIGN

This section of the TIR should include the analysis and design information used to prepare the required **construction stormwater pollution prevention plan**. This information should be presented in two parts associated with the CSWPPP's two component plans, the erosion sediment control (ESC) plan (Part A) and the stormwater pollution prevention and spill (SWPPS) plan (Part B). See Sections 2.3.1.3 and 2.3.1.4 for plan specifications and contents. This CSWPPP is intended to be equivalent to and may be more stringent than that required for the NPDES Stormwater Construction Permit issued by State DOE.

ESC Plan Analysis and Design (Part A)

This section must include all hydrologic and hydraulic information used to analyze and design the erosion

and sediment control measures, including final ***site*** stabilization measures. The TIR shall explain how proposed ESC measures comply with the *Erosion and Sediment Control Standards* (detached Appendix D) and show compliance with the implementation requirements of Core Requirement #5, Section 1.2.5.

Part A must include the following:

1. Provide sufficient information to **justify** the overall ESC plan and the choice of individual ESC measures. At a minimum, there shall be a discussion of each of the measures specified in Section 1.2.5 and their applicability to the proposed project.
2. Include all **hydrologic and hydraulic information** used to analyze and size the ESC facilities shown in the engineering plans. Describe the methodology, and attach any graphics or sketches used to size the facilities.
3. Identify areas with a particularly **high susceptibility to erosion** because of slopes or soils. Discuss any special measures taken to protect these areas as well as any special measures proposed to protect water resources on or near the ***site***.
4. Identify any ESC recommendations in any of the **special reports** prepared for the project. If these recommendations are not included in the ESC plan, provide justification.
5. If proposing **exceptions or modifications** to the standards detailed in the *Erosion and Sediment Control Standards* (detached Appendix D), clearly present the rationale. If proposing techniques or products different from those detailed in the *ESC Standards*, provide supporting documentation so the County can determine if the proposed alternatives provide similar protection.

SWPPS Plan Design (Part B)

The **stormwater pollution prevention and spill plan** must identify all activities that could contribute pollutants to surface and storm water during construction. This section of the TIR must provide sufficient information to justify the selection of specific stormwater pollution prevention BMPs proposed to be applied to the pollution-generating activities that will occur with construction of the proposed project. BMPs applicable to such activities are found in the *King County Stormwater Pollution Prevention Manual* adopted pursuant to KCC 9.12.

At a minimum, there shall be a discussion of each anticipated pollution-generating activity and the pollution prevention BMPs selected to address it. If there are any **calculations** required for the selected BMP, include those in the discussion. If an **alternative BMP** or major modification to one of the County's standard BMPs will be used, a written request must be submitted for review and approval, detailing how the alternative will work. An "Alternative BMP Request Form" is available in the *Stormwater Pollution Prevention Manual*.

Updates or revisions to the SWPPS plan may be requested by King County at any time during project construction if the County determines that pollutants generated on the construction site have the potential to contaminate surface, storm, or ground water.

The SWPPS plan shall also **discuss the receiving waters**, especially if the receiving water body is listed on the **303d list**. Information must be provided that shows the plan meets **TMDL requirements**. Discuss the 303(d) listed pollutant generated or used onsite and any special handling requirements or BMPs.

❑ TIR SECTION 9
BOND QUANTITIES, FACILITY SUMMARIES, AND DECLARATION OF COVENANT

Bond Quantities Worksheet

Each plan submittal requires a construction quantity summary to establish appropriate bond amounts. Using the *Bond Quantities Worksheet* furnished by DDES (see Reference 8-H), the design engineer shall separate existing right-of-way and erosion control quantities from other onsite improvements. In addition, the design engineer shall total the amounts based on the unit prices listed on the form.

Drainage facilities for single family residential building permits, which are normally not bonded, shall be constructed and approved prior to granting the certificate of occupancy.

DRAFT

Flow Control and Water Quality Facility Summary Sheet and Sketch

Following approval of the plans, a *Flow Control and Water Quality Facility Summary Sheet and Sketch* (see Reference 8-D) shall be submitted along with an $8^1/_2$" x 11" plan sketch for each facility proposed for construction. The plan shall show a north arrow, the tract, the facility access road, the extent of the facility, and the control structure location. The approximate street address shall be noted.

Declaration of Covenant for Privately Maintained Flow Control and WQ Facilities

Any declaration of covenant and grant of easement required for proposed flow control and water quality facilities per Section 1.2.6 must be included here for review and approval before recording. After approval by DDES, the declaration of covenant and grant of easement must be signed and recorded at the office of King County Records and Elections before any permit is approved.

Declaration of Covenant for Privately Maintained Flow Control BMPs

Any declarations of covenant and grant of easement required for proposed flow control BMPs per Section 5.2 must be included here for review and approval before recording. After approval by DDES, all such documents must be signed and recorded at the office of King County Records and Elections before any permit is approved.

❑ TIR SECTION 10
OPERATIONS AND MAINTENANCE MANUAL

For each flow control and water quality facility that is to be privately maintained, and for those that have special non-standard features, the design engineer shall prepare an operations and maintenance manual. The manual should be simply written and should contain a brief description of the facility, what it does, and how it works. In addition, the manual shall include a copy of the *Maintenance Requirements for Flow Control, Conveyance, and WQ Facilities* (see Appendix A) and provide an outline of maintenance tasks and the recommended frequency each task should be performed. This is especially important for water quality facilities where proper maintenance is critical to facility performance. For this reason, most of the water facility designs in Chapter 6 include "maintenance considerations" important to the performance of each facility.

DRAFT

2.3.1.2 SITE IMPROVEMENT PLAN

Site improvement plans shall portray design concepts in a clear and concise manner. The plans must present all the information necessary for persons trained in engineering to review the plans, as well as those persons skilled in construction work to build the project according to the design engineer's intent. Supporting documentation for the site improvement plans must also be presented in an orderly and concise format that can be systematically reviewed and understood by others.

The **vertical datum** on which all engineering plans, plats, binding site plans, and short plats are to be based must be the North American Vertical Datum (NAVD) of 1988, and the datum must be tied to at least one King County Survey Control Network benchmark. The benchmark(s) shall be shown or referenced on the plans. If a King County Control Network benchmark does not exist within $^1/_2$ mile of the subject property, or if 250 feet or greater of total vertical difference exists between the starting benchmark and the project, an assumed or alternate vertical datum may be used. Datum correlations can be found in Table 4.4.2.C.

Horizontal control for all plats, binding site plans, and short plats shall reference the North American Datum of 1983/91 as the coordinate base and basis of bearings. All horizontal control for these projects must be referenced to a minimum of two King County Survey Horizontal Control monuments. If two horizontal control monuments do not exist within one mile of the project, an assumed or alternate coordinate base and basis of bearings may be used. Horizontal control monument and benchmark information is available from the King County Survey Department.

The site improvement plans consist of all the plans, profiles, details, notes, and specifications necessary to construct road, drainage structure, and off-street parking improvements. Site improvement plans include the following:

- A **base map** (described on page 2-21), and
- ***Site* plan and profiles** (beginning on page 2-22).

Note: Site improvement plans must also include grading plans if onsite grading extends beyond the roadway.

DRAFT

Modified Site Improvement Plan

DDES may allow a modified site improvement plan for some projects in Targeted Drainage Review (see Section 2.3.2, p. 2-32) or where major improvements (e.g., detention facilities, conveyance systems, bridges, road right-of-way improvements, etc.) are not proposed. The modified site improvement plan must:

1. Be drawn on a 11" x 17" or larger sheet,
2. Accurately locate structure(s) and access, showing observance of the setback requirements given in this manual, the critical areas code (KCC 21A.24), or other applicable documents,
3. Provide enough information (datum, topography, details, notes, etc.) to address issues as determined by DDES.

❑ GENERAL PLAN FORMAT

Site improvement plans should use *King County Roads Standard Map Symbols* as appropriate, and must include *Standard Plan Notes* (see Reference Section 7). Each plan must follow the general format detailed below:

1. Plan sheets and profile sheets, or combined **plan and profile sheets**, specifications, and detail sheets as required shall be on "D-size" sheets (24" x 36"). "E-size" sheets (36" x 42") are also acceptable for commercial proposals, except that associated right-of-way improvements must be on "D-size" sheets (24" x 36"). Original sheets shall be archive quality reproducibles, Mylar, or equal.
2. **Drafting details** shall generally conform to *King County Standard Map Symbols* (see Reference Section 7-A) with lettering size (before reduction) no smaller than Leroy 80 (Leroy 100 is preferred). Existing features shall be shown with dashed lines or as half-toned (screened) in order to clearly

distinguish existing features from proposed improvements.

3. Each submittal shall contain a **project information/cover sheet** with the following:
   a) Title: Project name and DDES file number
   b) Table of contents (if more than three pages)
   c) Vicinity map
   d) Name and phone number of utility field contacts (e.g., water, sanitary sewer, gas, power, telephone, and TV) and the One-Call number (1-800-424-5555)
   e) King County's preconstruction/inspection notification requirements
   f) Name and phone number of the erosion control supervisor
   g) Name and phone number of the surveyor
   h) Name and phone number of the owner/agent
   i) Name and phone number of the applicant
   j) Legal description
   k) Plan approval signature block for DDES
   l) Name and phone number of the engineering firm preparing the plans (company logos acceptable)
   m) Fire Marshal's approval stamp (if required)
   n) Statement that mailbox locations have been designated or approved by the U.S. Postal Service (where required)
   o) List of conditions of preliminary approval on all ***site*** improvements.
4. An **overall site plan** shall be included if more than three plan sheets are used. The overall plan shall be indexed to the detail plan sheets and include the following:
   a) The complete property area development
   b) Right-of-way information
   c) Street names and road classification
   d) All project phasing and proposed division boundaries
   e) All natural and proposed drainage collection and conveyance systems with catch basin numbers shown.
5. Each sheet of the plan set shall be stamped, signed, and dated by a ***civil engineer***. At least one sheet showing all boundary survey information must be provided and stamped by a **land surveyor** licensed in the State of Washington.
6. **Detail sheets** shall provide sufficient information to construct complex elements of the plan. Details may be provided on plan and profile sheets if space allows.
7. A **title block** shall be provided on each plan sheet. At a minimum, the title block shall list the following:
   a) Development title
   b) Name, address, and phone number of the firm or individual preparing the plan
   c) A revision block
   d) Page (of pages) numbering
   e) Sheet title (e.g., road and drainage, grading, erosion and sediment control).

DRAFT

8. A blank **approval block** (4" high x 6" wide) shall be provided on each plan sheet. Two such blocks shall be provided on the first sheet of a plan set.
9. The **location and label** for each section or other detail shall be provided.
10. **Critical areas**, critical area buffers, and critical area building setbacks as required by KCC 21A.24 shall be delineated and labeled.
11. All **match lines** with matched sheet number shall be provided.
12. All division or phase lines and the **proposed limits of construction** under the permit application shall be indicated.
13. **Wetlands** shall be labeled with the number from the County's wetland inventory, or shall be labeled as "uninventoried" if not listed on the wetland inventory.
14. The **standard plan notes** that apply to the project shall be provided on the plans (see Reference Section 7-B).
15. Commercial building permit applications shall include the **designated zoning** for all properties adjacent to the development ***site***(s).

DRAFT

❑ BASE MAP

A site improvement plan **base map** provides a common base and reference in the development and design of any project. A base map helps ensure that the engineering plans, grading plans, and ESC plans are all developed from the same background information. This base map shall include the information listed in Table 2.3.1.A.

TABLE 2.3.1.A BASE MAP REQUIREMENTS

Feature	Requirements
Ground Surface Topography	Provide topography within the ***site*** and extending beyond the property lines. Contour lines must be shown as described in "Plan View: Site Plan and Roadway Elements" (p. 2-22).
Surface Water Discharge	Provide ground surface elevations for a reasonable "fan" around points of discharge extending at least 50 feet downstream of all point discharge outlets.
Hydrologic Features	Provide spot elevations in addition to contour lines to aid in delineating the boundaries and depth of all existing floodplains, wetlands, channels, swales, streams, storm drainage systems, roads (low spots), bogs, depressions, springs, seeps, swales, ditches, pipes, groundwater, and seasonal standing water.
Other Natural Features	Show the location and relative sizes of other natural features such as rock outcroppings, existing vegetation, and trees 12 inches in diameter and greater that could be disturbed by the project improvements and construction activities (within tree canopy), noting species.
Flows	Provide arrows that indicate the direction of surface flow on all public and private property and for all existing conveyance systems.
Floodplains/ Floodways	Show the floodplain/floodways as required by the flood hazard portion of the critical areas code (KCC 21A.24) and Section 4.4.2.
General Background Information	Show the location and limits of all existing: • Property boundaries • Structures • Easements (including dimensions) • Total property (including dimensions) • Roads and right-of-way • Sanitary sewers and water utilities • Common open space • Public dedications • Other manmade features affecting existing topography/proposed improvements.
Development Limitations	Delineate limitations to the development that may occur as identified on the TIR worksheet, Part 11 (see Reference 8-A).

DRAFT

❑ SITE PLAN AND PROFILES

The design engineer shall provide plans and profiles for all construction, including but not limited to the following information:

Plan View: Site Plan and Roadway Elements

1. Provide **property lines**, **right-of-way lines**, and widths for proposed roads and intersecting roads. *Note: the condition of all public right-of-way and the right to use it as proposed must be verified.*
2. Provide all existing and proposed **roadway features**, such as centerlines, edges of pavement and shoulders, ditchlines, curbs, and sidewalks. In addition, show points of access to abutting properties and roadway continuations.
3. Show existing and proposed **topography contours** at 2-foot intervals (5-foot intervals for slopes greater than 15 percent, 10-foot intervals for slopes greater than 40 percent). Contours may be extrapolated from USGS mapping, aerial photos, or other topography map resources. However, contours shall be field verified for roadway and stream centerlines, steep slopes, floodplains, drainage tracts easements, and conveyance systems. Contours shall extend 50 feet beyond property lines to resolve questions of setback, cut and fill slopes, drainage swales, ditches, and access or drainage to adjacent property.
4. Show the location of all existing **utilities** and proposed utilities (except those designed by the utility and not currently available) to the extent that these will be affected by the proposed project. Clearly identify all existing **utility poles**.
5. Identify all roads and adjoining subdivisions.
6. Show **right-of-way** for all proposed roadways, using sufficient dimensioning to clearly show exact locations on all sections of existing and proposed dedicated public roadway.
7. Clearly differentiate areas of **existing pavement** and areas of **new pavement**. If the project is a ***redevelopment project***, delineate areas of ***replaced impervious surface***.
8. For subdivision projects, generally use **drawing scales** of 1"=50'; however, 1"=100' is optional for development of lots one acre or larger. For commercial, multi-family, or other projects, generally use scales of 1"=20'; however, 1"=10', 1" = 30', 1"=40' and 1"=50' are acceptable. Show details for clarification, including those for intersections and existing driveways, on a larger scale.

DRAFT

Plan View: Drainage Conveyance

1. Sequentially **number all catch basins and curb inlets** starting with the structure farthest downstream.
2. Represent **existing storm drainage facilities** in dashed lines and label with "Existing."
3. Clearly label existing storm drainage **facilities to be removed** with "Existing to be removed."
4. Show the length, diameter, and material for all **pipes**, **culverts**, and **stub-outs**. Include the slope if not provided on the profile view. Material may be noted in the plan notes.
5. Clearly label **catch basins** as to size and type (or indicate in the plan notes).
6. Clearly label **stub-out locations** for footing drains and other lot-specific connections to the storm drainage system. Locate all stub-outs to allow gravity flow from the lowest corner of the lot to the connecting catch basin.
7. Show **datum**, **benchmark locations**, and **elevations** on each plan sheet.
8. Clearly label all stub-out locations for any **future pipe connections**.
9. Clearly show on the plans all drainage **easements, tracts**, access easements, Native Growth Retention Areas, Critical Area Tracts, Critical Area Setback Areas, and building setback lines. Show dimensions, type of restriction, and use.
10. Using arrows, indicate the **drainage direction** of hydraulic conveyance systems.

Plan View: Other

1. Show the location, identification, and dimensions of all **buildings**, **property lines**, **streets**, **alleys**, and **easements**.
2. Show the locations of **structures on abutting properties** within 50 feet of the proposed ***project site***.
3. Show the location of all proposed **drainage facility fencing**, together with a typical section view of each fencing type.
4. Provide section details of all **retaining walls and rockeries**, including sections through critical portions of the rockeries or retaining walls.
5. Show all existing and proposed **buildings with projections and overhangs**.
6. Show the location of all **wells** on ***site*** and within 100 feet of the ***site***. Note wells to be abandoned.
7. Show the location and dimensions of proposed **flow control BMP** devices, features, pathways, limits, and set-asides.
8. Show the location and dimensions of structural **source control BMPs** required by the *King County Stormwater Pollution Prevention Manual*.

Profiles: Roadway and Drainage

1. Provide **existing centerline ground profile** at 50-foot stations and at significant ground breaks and topographic features, with average accuracy to within 0.1 feet on unpaved surface and 0.02 feet on paved surface.
2. For publicly maintained roadways, provide **final road and storm drain profile** with the same stationing as the horizontal plan, reading from left to right, to show stationing of points of curve, tangent, and intersection of vertical curves, with elevation of 0.01 feet. Include tie-in with intersecting pipe runs.
3. On a grid of numbered lines, provide a continuous plot of **vertical positioning against horizontal**.
4. Show finished **road grade and vertical curve data** (road data measured at centerline or edge of pavement). Include stopping sight distance.
5. Show all **roadway drainage**, including drainage facilities that are within the right-of-way or easement.
6. On the profile, show slope, length, size, and type (in plan notes or on a detail sheet) for all **pipes and detention tanks** in public right-of-way.
7. Indicate the **inverts** of all pipes and culverts and the elevations of catch basin grates or lids. It is also desirable, but not required, to show invert elevations and grate elevations on plan sheets.
8. For pipes that are proposed to be within 2.0 feet of finished grade, indicate the **minimum cover dimensions**.
9. Indicate **roadway stationing** and offset for all catch basins.
10. Indicate **vertical and horizontal scale**.
11. Clearly label all profiles with respective street names and plan sheet reference numbers, and indicate all profile sheet reference numbers on plan sheets, if drawn on separate sheets.
12. Locate **match points with existing pavements**, and show elevations.
13. Show all **property boundaries**.
14. Label all **match line locations**.
15. Provide profiles for all **12-inch and larger pipes** and for **channels** (that are not roadside ditches).
16. Show the location of all existing and proposed (if available or critical for clearance) **gas**, **water**, and **sanitary sewer crossings**.

DRAFT

17. Show **energy dissipater locations**.
18. Identify **datum** used and all **benchmarks** (may be shown on plan view instead). Datum and benchmarks must refer to established control when available.
19. Use a **vertical scale** of 1"=5'. As an exception, vertical scale shall be 1"=10' if the optional 1"=100' horizontal scale is used on projects with lots one acre or larger. Clarifying details, including those for intersections and existing driveways, should use a larger scale.
20. **Split sheets**, with the profile aligned underneath the plan view, are preferred but not required.

❑ DETAILS

The design engineer shall provide details for all construction, including but not limited to the following.

Flow Control, Water Quality, and Infiltration Facility Details

1. Provide a scaled drawing of each detention pond or vault and water quality facility, including the tract boundaries.
2. Show predeveloped and finished grade **contours** at 2-foot intervals. Show and label **maximum design water elevation**.
3. Dimension all **berm widths**.
4. Show and label at least two **cross sections** through a pond or water quality facility. One cross section must include the restrictor.
5. Specify **soils and compaction requirements** for pond construction.
6. Show the location and detail of **emergency overflows**, **spillways**, and **bypasses**.
7. Specify **rock protection/energy dissipation** requirements and details.
8. Provide **inverts** of all pipes, grates, inlets, tanks, and vaults, and **spot elevations** of the pond bottom.
9. Show the location of **access roads** to control manholes and pond/forebay bottoms.
10. Provide plan and section views of all **energy dissipaters**, including **rock splash pads**. Specify the size of rock and thickness.
11. Show **bollard locations** on plans. Typically, bollards are located at the entrance to drainage facility access roads.
12. On the pond or water quality facility detail, show the size, type (or in plan notes), slope, and length of all **pipes**.
13. Show to scale the section and plan view of **restrictor and control structures**. The plan view must show the location and orientation of all inlet pipes, outlet pipes, and flow restrictors.
14. Draw details at one of the following **scales**: 1"=1', 1"=2', 1"=4', 1"=5', 1"=10', or 1"=20'.

Structural Plan Details

Any submittal that proposes a structure (e.g., bridge crossing, reinforced concrete footings, walls, or vaults) shall include plan sheets that include complete working drawings showing dimensions, steel placement, and specifications for construction. Structures may require a design prepared and **stamped by a professional structural engineer** licensed in the State of Washington, and an application for a separate commercial building permit.

DRAFT

2.3.1.3 EROSION AND SEDIMENT CONTROL (ESC) PLAN

This section details the specifications and contents for ESC plans. Note that an ESC plan includes the plan's drawings plus an ESC report, which provides all supporting information and any additional direction necessary for implementing ESC measures and meeting ESC implementation requirements. The ESC plan's drawings may be simplified by the use of the symbols and codes provided for each ESC measure in the *Erosion and Sediment Control Standards* (detached Appendix D). In general, the ESC plan's drawings shall be submitted as a separate plan sheet(s). However, there may be some relatively simple projects where providing separate grading and ESC plan drawings is unnecessary.

❑ GENERAL SPECIFICATIONS

The **site improvement plan** shall be used as the base of the ESC plan. Certain detailed information that is not relevant (e.g., pipe/catch basin size, stub-out locations, etc.) may be omitted to make the ESC plan easier to read. At a minimum, the ESC plan shall include all of the information required for the base map (see Table 2.3.1.A, p. 2-21), as well as existing and proposed roads, driveways, parking areas, buildings, drainage facilities, utility corridors not associated with roadways, *relevant critical areas*[3] and critical area buffers, and proposed final topography. A smaller scale may be used to provide better comprehension and understanding.

The ESC plan shall generally be designed for proposed topography, not existing topography, since rough grading is usually the first step in ***site*** disturbance. The ESC plan shall **address all phases of construction** (e.g., clearing, grading, installation of utilities, surfacing, and final stabilization). If construction is being phased, separate ESC plans may need to be prepared to address the specific needs for each phase of construction.

The ESC plan outlines the minimum requirements for anticipated ***site*** conditions. During construction, **ESC plans shall be revised as necessary** by the ESC supervisor or as directed by King County to address changing ***site*** conditions, unexpected storm events, or non-compliance with the ESC performance criteria in Core Requirement #5.

The **ESC plan** shall be consistent with the information provided in Section 8 of the TIR and **shall address the following:**

1. Identify areas with a high susceptibility to erosion.
2. Provide all details necessary to clearly illustrate the intent of the ESC design.
3. Include ESC measures for all on- and offsite utility construction included in the project.
4. Specify the construction sequence. The construction sequence shall be specifically written for the proposed project. An example construction sequence is provided in Appendix D.
5. Include ESC standard plan notes (see Reference Section 7-B).
6. Include an inspection and maintenance program for ESC measures, including designation of a certified ESC supervisor and identification of phone numbers for 24-hour contact.
7. Include the basis and calculations for selection and sizing of ESC measures.

❑ MEASURE-SPECIFIC INFORMATION

ESC plan drawings must include the following information specific to applicable ESC measures and implementation requirements. As noted above, this information may need to be updated or revised during the life of the project by the ESC supervisor or as directed by King County.

Clearing Limits

1. **Delineate** clearing limits.

[3] *Relevant critical areas*, for the purposes of drainage review, include aquatic areas, wetlands, ***flood hazard areas***, ***erosion hazard areas***, ***landslide hazard areas***, ***steep slope hazard areas***, and ***critical aquifer recharge areas***.

DRAFT

2. Provide **details** sufficient to install and maintain the clearing limits.

Cover Measures

1. Specify the type and location of **temporary cover measures** to be used onsite.
2. If **more than one type** of cover measure is to be used onsite, indicate the areas where the different measures will be used, including steep cut and fill slopes.
3. If the type of cover measures to be used will vary depending on the time of year, soil type, gradient, or some other factor, specify the **conditions that control the use of the different measures**.
4. Specify the nature and location of **permanent cover measures**. If a landscaping plan is prepared, this may not be necessary.
5. Specify the approximate amount of cover measures necessary to cover all disturbed areas.
6. If **netting, blankets, or plastic sheeting** are specified, provide typical detail sufficient for installation and maintenance.
7. Specify the **mulch types**, **seed mixes**, **fertilizers**, and **soil amendments** to be used, as well as the application rate for each item.
8. For **surface roughening**, describe methods, equipment and areas where surface roughening will be use.
9. If **PAM** is used, show location(s) and describe application method.
10. When **compost blankets** are used, show location, application rates, and the name of the supplier to document that compost meets WAC 173-350-22 standards and meets Grade A quality specifications.

Perimeter Protection

1. Specify the **location and type** of perimeter protection to be used.
2. Provide **typical details** sufficient to install and maintain the perimeter protection.
3. If **silt fence** is to be used, specify the type of fabric to be used.
4. If **compost berms or socks** are used, documentation must be provide to assure the supplier meets the criteria under WAC 173-350-220 and compost meets Grade A quality standards.

Traffic Area Stabilization

1. Locate the **construction entrance**(s).
2. Provide **typical details** sufficient to install and maintain the construction entrance.
3. Locate the **construction roads and parking areas**.
4. Specify the measure(s) that will be used to create **stabilized construction roads and parking areas**. Provide sufficient detail to install and maintain.
5. If a **wheel wash** or **tire bath system** will be installed, provide location, typical details for installation and maintenance.
6. Provide a list of **dust control** products that will be used onsite and the location of potential application areas.

Sediment Retention

1. Show the **locations** of all sediment ponds and traps.
2. Dimension pond **berm widths** and all inside and outside pond slopes.
3. Indicate the **trap/pond storage** required and the depth, length, and width dimensions.
4. Provide typical **section views** through pond and outlet structures.
5. If **chemical or electrocoagulation treatment** of sediment-laden waters will be used, approval documentation from DOE must be included.

DRAFT

6. Provide details for **disposal of contaminated or chemically treated waters** (e.g., where Chitosan or CO2 have been used).
7. Include appropriate **approval documentation from local sewer districts** if contaminated or chemically treated water will be discharged to the sanitary sewer.
8. Provide typical details of the **control structure** and **dewatering mechanism**.
9. Detail **stabilization techniques** for outlet/inlet protection.
10. Provide details sufficient to install **cell dividers**.
11. Specify mulch or recommended **cover of berms and slopes**.
12. Indicate the **required depth gage** with a prominent mark at 1-foot depth for sediment removal.
13. Indicate **catch basins** that are to be protected.
14. Provide **details of the catch basin protection** sufficient to install and maintain.

Surface Water Control

1. **Locate** all pipes, ditches, interceptor ditches, dikes, and swales that will be used to convey stormwater.
2. Provide **details** sufficient to install and maintain all **conveyances**.
3. Indicate locations of **outlet protection** and provide detail of protections.
4. Indicate locations and outlets of any possible **dewatering systems**. Provide details of alternative discharge methods from dewatering systems if adequate infiltration rates cannot be achieved.
5. Indicate the location of any **level spreaders** and provide details sufficient to install and maintain.
6. Show all **temporary pipe inverts**.
7. Provide location and specifications for the **interception of runoff from disturbed areas** and the conveyance of the runoff to a non-erosive discharge point.
8. Provide **locations** of **rock check dams**.
9. Provide **details**, including front and side sections, of typical **rock check dams**.

DRAFT

Wet Season Requirements

1. Provide a **list** of all applicable wet season requirements.
2. Clearly identify that from October 1st through April 30th, no soils shall be exposed for more than two consecutive working days. Also note that this **two-day requirement** may be applied at other times of the year if storm events warrant more conservative measures.
3. Clearly identify that **exposed soils shall be stabilized** at the end of the workday prior to a weekend, holiday, or predicted rain event.

Critical Areas Restrictions

1. **Delineate and label** the following critical areas, and any applicable buffers, that are on or adjacent to the ***project site***: aquatic areas, wetlands, ***flood hazard areas***, ***erosion hazard areas***, ***landslide hazard areas***, ***steep slope hazard areas***, and ***critical aquifer recharge areas***.
2. If construction creates disturbed areas within any of the above listed critical areas or associated buffers, specify the type, locations, and details of any measures or other provisions necessary to **comply with the critical area restrictions** in Appendix D and protect surface waters and steep slopes.

2.3.1.4 STORMWATER POLLUTION PREVENTION AND SPILL (SWPPS) PLAN

This section details the specifications and contents for SWPPS plans, which together with ESC plans, comprise the construction stormwater pollution prevention plan (CSWPPP) that must be submitted as part of the engineering plans required for drainage review.

The SWPPS plan must be kept on ***site*** during all phases of construction and shall **address the construction-related pollution-generating activities outlined in Subsection A below**. The plan must include a description of the methods the general contractor will use to ensure sub-contractors are aware of the SWPPS plan. A **form or record** must be provided that states all sub-contractors have read and agree to the SWPPS plan.

A SWPPS plan consists of the following three elements, which are further described in Subsections B, C, and D below:

1. A **site plan** showing the location and description of BMPs required to prevent pollution and control spills from construction activities and from chemicals and other materials used and stored on the construction site. See Subsection B below for more specifics on the SWPSS site plan.
2. A **pollution prevention report** listing the potential sources of pollution and identifying the operational, source control, and treatment BMPs necessary to prevent/mitigate pollution from these sources. See Subsection C below for more specifics on the SWPSS pollution prevention report.
3. A **spill prevention and cleanup report** describing the procedures and BMPs for spill prevention and including provisions for cleanup of spills should they occur. See Subsection D below for more specifics on the SWPSS spill prevention and cleanup report.

DRAFT

A. ACTIVITY-SPECIFIC INFORMATION REQUIRED

At a minimum, the SWPPS plan shall address, if applicable, the following pollution-generating activities typically associated with construction and include the information specified below for each activity. If other pollution-generating activities associated with construction of the proposed project are identified, the SWPPS plan must address those activities in a similar manner.

Storage and Handling of Liquids

1. Identify liquids that will be handled or stored onsite, including but not limited to **petroleum products, fuel, solvents, detergents, paint, pesticides, concrete admixtures, and form oils**.
2. Specify **types and sizes of containers** of liquids that will be stored/handled onsite. Show locations on the SWPPS site plan.
3. Describe **secondary containment methods** adequately sized to provide containment for all liquids stored onsite. Show the locations of containment areas on the SWPPS site plan.

Storage and Stockpiling of Construction Materials and Wastes

1. **Identify** construction materials and wastes that may be generated or stockpiled onsite. Show the **locations** where these materials and wastes will be generated and stockpiled on the SWPPS site plan.
2. Specify type of **cover measures** to be used to keep rainwater from contacting construction materials and wastes that can contribute pollutants to storm, surface, and ground water.
3. If wastes are kept in **containers**, describe how rainwater will be kept out of the containers.

Fueling

1. Specify **method of onsite fueling** for construction equipment (i.e. stationary tanks, truck mounted tanks, wet hosing, etc.). If stationary tanks will be used, show their location on the SWPPS site plan.
2. Describe **type and size of tanks**.

3. Describe **containment methods for fuel spills** and make reference to the SWPPS site plan for location information.
4. If fueling occurs **during evening hours**, describe lighting and signage plan. Make reference to the SWPPS site plan for location information.

Maintenance, Repairs, and Storage of Vehicles and Equipment

1. Identify **maintenance and repair areas** and show their locations on the SWPPS site plan. Use of drip pans or plastic beneath vehicles is required. A note to this effect must be shown on the SWPPS site plan.
2. Describe method for collection, storage, and disposal of **vehicle fluids**.
3. If an area is designated for vehicle maintenance, **signs must be posted** that state no vehicle washing may occur in the area. A note to this effect must be shown on the SWPPS site plan.

Concrete Saw Cutting, Slurry, and Washwater Disposal

1. Identify **truck washout areas** to assure such areas are not within a ***critical aquifer recharge area***. If they are, the washout area must be lined with an impervious membrane. Show location information on the SWPPS site plan.
2. Specify **size of sumps** needed to collect and contain slurry and washwater. Show location information on the SWPPS site plan.
3. Identify **areas for rinsing hand tools** including but not limited to screeds, shovels, rakes, floats and trowels. Show the locations of these areas on the SWPPS site plan.
4. Describe **methods for collecting, treating, and disposal** of waste water from exposed aggregate processes, concrete grinding and saw cutting, and new concrete washing and curing water.

DRAFT

Handling of pH Elevated Water

New concrete vaults/structures may cause collected water to have an elevated pH. This water cannot be discharged to storm or surface water until neutralized.

1. Provide details on **treating/neutralizing water** when pH is not within neutral parameters.
2. Provide details on **disposal of water** with elevated pH or of the treated water.

Application of Chemicals including Pesticides and Fertilizers

1. Provide a **list of chemicals** that may be used on the ***project site*** and the application rates.
2. Describe **where and how chemicals will be applied**. Show location information on the SWPPS site plan.
3. Describe **where and how chemicals will be stored**. Show location information on the SWPPS site plan.

B. SWPPS SITE PLAN

The ***site*** plan element of the SWPPS plan shall include all of the information required for the base map (see Table 2.3.1.A, p. 2-21), as well as existing and proposed roads, driveways, parking areas, buildings, drainage facilities, utility corridors not associated with roadways, *relevant critical areas*[4] and associated buffers, and proposed final topography. A smaller scale may be used to provide more comprehensive details on specific locations of each activity and specific prevention measure. In addition to this information, the following items, at a minimum, shall be provided as applicable:

[4] *Relevant critical areas*, for the purposes of drainage review, include aquatic areas, wetlands, ***flood hazard areas***, ***erosion hazard areas***, ***landslide hazard areas***, ***steep slope hazard areas***, and ***critical aquifer recharge areas***.

1. Identify locations where **liquids will be stored** and delineate secondary containment areas that will be provided.
2. Identify locations where **construction materials and wastes** will be generated and stockpiled.
3. Identify location of **fueling for vehicles and equipment** if stationary tanks will be used.
4. Delineate **containment areas** for fuel spills.
5. Show location of **lighting and signage** for fueling during evening hours.
6. Delineate **maintenance and repair areas** and clearly note that drip pans or plastic shall be used beneath vehicles. Also, clearly note that signs must be posted that state no **vehicle washing** may occur in the area.
7. Delineate **truck washout areas** and identify the location of **slurry/washwater sumps and rinsing areas** for tools.
8. Delineate where **chemicals** will be applied and identify where they will be stored.
9. Identify where **spill response materials** will be stored.

C. POLLUTION PREVENTION REPORT

This report provides the specifics on pollution prevention and must include the following information in addition to the activity-specific information specified in Subsection A above:

1. List the possible **sources of pollution** per Subsection A above and identify the BMPs to be used for each source to prevent pollution. Include any **supporting information** (site conditions, calculations, etc.) for the selection and sizing of pollution prevention BMPs.
2. Identify the **personnel** responsible for pollution prevention and clearly list the responsibilities of each person identified. **Contact information** for these personnel must be clearly identified in the report and on the SWPPS site plan.
3. Describe the **procedures** to be used for monitoring pollution prevention BMPs and for responding to a BMP that needs attention, including keeping records/reports of all inspections of pollution prevent BMPs (see Reference Section 8-E for examples of worksheets that may be used).

DRAFT

D. SPILL PREVENTION AND CLEANUP REPORT

This report provides the specifics on spill prevention and cleanup and must include the following information in addition to any activity-specific information in Subsection A above related to spill prevention:

1. List the possible **sources of a spill** and identify the BMPs to be used for each source to prevent a spill.
2. Identify **personnel** responsible for spill prevention and cleanup and clearly list the responsibilities of each person identified. **Contact information** for these personnel must be clearly identified in the report and on the SWPPS site plan.
3. Describe the **procedures** to be used for monitoring spill prevention BMPs and for responding to a spill incident, including keeping records/reports of all inspections and spills (see Reference Section 8-E for examples of worksheets that may be used).
4. Identify where **spill response materials** will be stored. Make reference to the SWPSS site plan for location information.
5. Identify **disposal methods** for contaminated water and soil after a spill.

2.3.1.5 LANDSCAPE MANAGEMENT PLANS (IF APPLICABLE)

Approved landscape management plans are allowed to be used as an alternative to the requirement to formally treat (with a facility) the runoff from pollution generating pervious surfaces subject to Core Requirement #8 (see Section 1.2.8). A *landscape management plan* is a King County approved plan for defining the layout and long-term maintenance of landscaping features to minimize the use of pesticides and fertilizers, and reduce the discharge of suspended solids and other pollutants. **General guidance for preparing landscape management plans** is provided in Reference Section 4-C.

If a landscape management plan is proposed, it must be submitted with the engineering plans for the proposed project. The elements listed below are required for evaluation of landscape management plans.

1. Provide a ***site* vicinity map** with topography.
2. Provide a **site plan** with topography. Indicate areas with saturated soils or high water tables.
3. Provide a **plant list** (provide both common and scientific names) that includes the following information:
   a) Indicate any drought-tolerant plants, disease resistant varieties, species for attracting beneficial insects (if any) and native plants.
   b) For shrubs and groundcovers, indicate the proposed spacing.
   c) For turf areas, indicate the grass mix or mixes planned. Indicate sun/shade tolerance, disease susceptibility, drought tolerance and tolerance of wet soil conditions.
4. Provide a **landscape plan**. Indicate placement of landscape features, lawn areas, trees, and planting groups (forbes, herbs, groundcovers, etc.) on the ***site***.
5. Include information on **soil preparation** and fertility requirements.
6. Provide information on the design of the **irrigation method** (installed sprinkler system, drip irrigation system, manual, etc.)
7. Provide a **landscape maintenance plan**, including the following:
   a) Physical care methods, such as thatch removal or aeration, and mowing height and frequency
   b) Type of fertilizer (including N-P-K strength) and fertilization schedule or criteria
   c) Type of chemicals to be used for common pests such as crane fly larvae, and the criteria or schedule for application
   d) Any biocontrol methods.
8. Provide information about the **storage of pesticides or other chemicals**, and **disposal measures** that will be used.
   a) If applicable, indicate how the chemicals will be stored on the ***site*** between applications to prevent contact with stormwater or spills into the storm drainage system.
   b) Indicate how excess quantities of fertilizers or chemicals will be handled for individual applications.
9. Provide an **implementation plan** (see Reference Section 4-C for guidance on preparing the implementation plan).

DRAFT

2.3.2 PROJECTS IN TARGETED DRAINAGE REVIEW (TDR)

This section outlines the specifications and contents of limited scope engineering plans allowed for projects in Targeted Drainage Review. Table 2.3.2.A specifies the minimum required elements of the targeted technical information report based on the type of permit or project, and on the three categories of project characteristics subject to Targeted Drainage Review per Section 1.1.2.2.

TABLE 2.3.2.A MINIMUM ENGINEERING PLAN ELEMENTS[1] FOR PROJECTS IN TARGETED DRAINAGE REVIEW

Type of Permit or Project	Drainage Review Type	Project Category 1[2] Projects in TDR that contain or are adjacent to a ***flood***, ***erosion***, or ***steep slope hazard area***; or are within a ***CDA*** or LHDA; or propose ≥7,000 sf of ***land disturbing activity*** (3 ac if in Small Project DR).	Project Category 2[2] Projects in TDR that propose to ***construct or modify*** a 12" or larger pipe/ditch, or receive runoff from a 12" or larger pipe/ditch	Project Category 3[2] ***Redevelopment projects*** in TDR that propose $100,000 or more of improvements to an existing ***high-use site***
SINGLE FAMILY RESIDENTIAL (SFR) BUILDING PERMITS SHORT PLATS PERMITS FOR AGRICULTURAL PROJECTS	Targeted Drainage Review ONLY	• TIR Sections 1, 2, and 6 (minimum) • Small Project ESC Plan[3] • Site Improvement Plan[5],	• TIR Sections 1, 2, 3, 5, 6, 7, and 8 (minimum) • Small Project ESC Plan[3] • ESC Plan[4] for conveyance work • Site Improvement Plan[5]	N/A
	Targeted Drainage Review COMBINED WITH Small Project Drainage Review	• TIR Sections 1, 2, and 6 (minimum) • Small Project ESC Plan[3] • Site Improvement Plan[5]	• TIR Sections 1, 2, 3, 5, 6, 7, and 8 (minimum) • Small Project ESC Plan[3] • ESC Plan[4] for conveyance work • Site Improvement Plan[5]	N/A
OTHER PROJECTS OR PERMITS	Targeted Drainage Review ONLY	• TIR Sections 1, 2, 6, and 8 (minimum) • ESC Plan[4] for any site disturbance work • Site Improvement Plan[5]	• TIR Sections 1, 2, 3, 5, 6, 7, and 8 (minimum) • ESC Plan[4] for any site disturbance work • Site Improvement Plan[5]	• TIR Sections 1, 2, 4, 8, and 10 (minimum) • ESC Plan[4] for any site disturbance work • Site Improvement Plan[5]

Notes:

(1) The above plan elements are considered the recommended minimum for most development cases in Targeted Drainage Review. DDES may add to these elements if deemed necessary for proper drainage review. *Predesign meetings with DDES are recommended to identify all required elements*.

(2) For more detailed descriptions of project categories, see Section 1.1.2.2. *If the proposed project has the characteristics of more than one category, the plan elements under each applicable category shall apply.*

(3) Small site ESC plans are an element of the small project drainage plan as explained in the *Small Project Drainage Requirements* booklet (detached Appendix C).

(4) ESC plans shall meet the applicable specifications detailed in Section 2.3.1.3 (p. 2-25)

(5) Site improvement plans shall meet the applicable specifications detailed in Section 2.3.1.2 (p. 2-18). DDES may allow modified site improvement plans as described in Section 2.3.1.2.

DRAFT

2.4 PLANS REQUIRED AFTER DRAINAGE REVIEW

This section includes the specifications and contents required of those plans submitted at the end of the permit review process or after a permit has been issued.

2.4.1 PLAN CHANGES AFTER PERMIT ISSUANCE

If changes or revisions to the originally approved engineering plans require additional review, the revised plans shall be submitted to DDES for approval prior to construction. The plan change submittals shall include all of the following:

1. The appropriate Plan Change Order form(s)
2. One copy of the revised TIR or addendum
3. Three sets of the engineering plans
4. Other information needed for review.

2.4.2 FINAL CORRECTED PLAN SUBMITTAL

During the course of construction, changes to the approved engineering plans are often required to address unforeseen field conditions or design improvements. Once construction is completed, it is the applicant's responsibility to submit to DDES a **final corrected plan**. These corrected drawings must be professionally drafted revisions applied to the original approved plan and must include all changes made during the course of construction; the ESC plan, however, should not be included. The final corrected plan must be stamped, signed, and dated by a ***civil engineer***.

DRAFT

Disposition of Approved Engineering Plans for Subdivisions

Upon engineering plan approval of any subdivision (including PUDs, binding site plans, and short plats), DDES will make a set of reproducible mylars (cost to be paid by the applicant) and return the original set to the applicant's engineer. DDES will retain this reproducible set, utilizing it to make copies for public inspection, distribution, and base reference as required. At the time the development is accepted for maintenance by King County, the DDES set of reproducibles shall be replaced by the corrected original set for permanent public records at the Department of Transportation Map Counter, 1st floor, King Street Center Building, 201 South Jackson Street, Seattle, Washington.

2.4.3 FINAL PLAT, SHORT PLAT, AND BINDING SITE PLAN SUBMITTALS

Any subdivision to be finalized, thereby completing the subdivision process and legally forming new lots, requires a **final submittal for approval and recording**. Binding site plans and short plats also require a final submittal for approval and recording. The final plat or map page shall contain the elements summarized and specified in detail in DDES customer information bulletins. Submittals shall be accompanied by appropriate fees as prescribed by King County Code. Final submittals will be allowed only after the approval of preliminary plans (for subdivisions only) and any required engineering plans, and after the construction of any required drainage facilities.

All final map sheets and pages shall be prepared by a **land surveyor** licensed in the State of Washington and shall conform to all state and local statutes.

The final submittal for recording only applies to **subdivisions** (plats), **binding site plans**, and **short plats**. This plan is required by state and local statutes.

In addition to the requirements described in the DDES customer information bulletins, submittals for final recording of subdivisions, short plats, and binding site plans **must include the following information:**

1. Indicate **dimensions** of all easements, tracts, building setbacks, tops of slopes, wetland boundaries, and floodplains.
2. Include **pertinent restrictions** as they apply to easements, tracts, and building setback lines.
3. Include the **dedication and indemnification clause** as provided in Reference Section 8-G.
4. State the **maximum amount of added impervious surface** and **proposed clearing per lot** as determined through engineering review. The maximum amount of impervious surface may be expressed in terms of percentage of lot coverage or square feet.
5. Include a recorded **declaration of covenant and grant of easement** for each lot on which flow control BMPs are installed or stipulated per Section 5.2.2.1, and each lot for which flow control BMPs are installed in a separate dedicated tract per Section 5.2.2.1.

DRAFT

CHAPTER 3

HYDROLOGIC ANALYSIS & DESIGN

KING COUNTY, WASHINGTON

SURFACE WATER DESIGN MANUAL

DRAFT

Section 3.1	**Hydrologic Design Standards and Principles**	**3-3**
Section 3.1.1	Hydrologic Impacts and Mitigation	3-3
Section 3.1.2	Flow Control Standards	3-5
Section 3.1.3	Hydrologic Analysis Using Continuous Models	3-6
Section 3.2	**Runoff Computation and Analysis Methods**	**3-9**
Section 3.2.1	Rational Method	3-11
Section 3.2.2	KCRTS/Runoff Files Method	3-20
Section 3.2.3	HSPF Model	3-35
Section 3.2.4	Storage Routing/Water Level Analysis Methods	3-36
Section 3.3	**Hydrologic Design Procedures and Considerations**	**3-41**
Section 3.3.1	General Hydrologic Design Process	3-41
Section 3.3.2	Flow Control Design with KCRTS	3-43
Section 3.3.3	Conveyance System Design with KCRTS	3-46
Section 3.3.4	Safety Factors in Hydrologic Design	3-47
Section 3.3.5	Design Options for Addressing Downstream Problems	3-48
Section 3.3.6	Point of Compliance Analysis	3-51
Section 3.3.7	Onsite Closed Depressions and Ponding Areas	3-54

DRAFT

CHAPTER 3

HYDROLOGIC ANALYSIS & DESIGN

This chapter presents the concepts and rationale for the surface water controls and designs required by this manual, the acceptable methods for estimating the quantity and characteristics of surface water runoff, and the assumptions and data requirements of the methods. These methods are used to analyze existing and to design proposed drainage systems and facilities. Specifically, hydrologic tools and methodologies are presented for the following tasks:

- Calculating runoff time series and flow statistics
- Designing detention and infiltration facilities
- Sizing conveyance facilities
- Analyzing conveyance capacities.

DRAFT

Chapter Organization

The information presented in this chapter is organized into three main sections:

- Section 3.1, "Hydrologic Design Standards and Principles" (p. 3-3)
- Section 3.2, "Runoff Computation and Analysis Methods" (p. 3-9)
- Section 3.3, "Hydrologic Design Procedures and Considerations" (p. 3-41).

These sections begin on odd pages so the user can insert tabs if desired for quicker reference.

Other Supporting Information

For specific guidance on the mechanics of using the KCRTS software for hydrologic analysis and design, refer to the *KCRTS Computer Software Reference Manual*.

DRAFT

3.1 HYDROLOGIC DESIGN STANDARDS AND PRINCIPLES

This section presents the rationale for and approach to hydrologic analysis and design in King County. Topics covered include the following:

- "Hydrologic Impacts and Mitigation," Section 3.1.1
- "Flow Control Standards," Section 3.1.2 (p. 3-5)
- "Hydrologic Analysis Using Continuous Models," Section 3.1.3 (p. 3-6)

3.1.1 HYDROLOGIC IMPACTS AND MITIGATION

Hydrologic Effects of Urbanization

The hydrologic effects of development can cause a multitude of problems, including minor nuisance flooding, degradation of public resources, diminished fish production, and significant flooding endangering life and property. Increased stormwater flows expand floodplains, bringing flooding to locations where it did not occur before and worsening flood problems in areas already flood-prone. Increased stormwater flows also hasten channel erosion, alter channel structure, and degrade fish habitat.

Human alteration of the landscape, including clearing, grading, paving, building construction, and landscaping, changes the physical and biological features that affect hydrologic processes. Soil compaction and paving reduce the infiltration and storage capacity of soils. This leads to a runoff process called *Horton overland flow* whereby the rainfall rate exceeds the infiltration rate, and the excess precipitation flows downhill over the soil surface. This type of flow rapidly transmits rainfall to the stream or conveyance system, causing much higher peak flow rates than would occur in the unaltered landscape.

DRAFT

Horton overland flow is almost nonexistent in densely vegetated areas, such as forest or shrub land, where the vast majority of rainfall infiltrates into the soil. Some of this infiltrated water is used by plants, and depending on soil conditions, some of it percolates until it reaches the groundwater table. Sometimes the percolating soil water will encounter a low-permeability soil or rock layer. In this case, it flows laterally as interflow over the low-permeability layer until it reaches a stream channel. Generally, forested lands deliver water to streams by subsurface pathways, which are much slower than the runoff pathways from cleared and landscaped lands. Therefore, urbanization of forest and pasture land leads to increased stormwater flow volumes and higher peak flow rates.

Land development increases not only peak flow rates but also changes annual and seasonal runoff volumes. *In forested basins in King County, about 55% of the rain that falls each year eventually appears as streamflow*. This percentage is called the *yield of a basin*. The remaining 45% of the rain evaporates and returns to the atmosphere. As trees are cleared and the soil is graded to make way for lawns and pastures, and as part of the land is covered with asphalt or concrete, the basin yield increases. More of the rain becomes streamflow, and less evaporates. In lowland King County, the yield of a basin covered with landscaped lawns would be about 65%, while the yield of an impervious basin would be about 85 to 90%.

For these reasons, development without mitigation increases peak stormwater rates, stormwater volumes, and annual basin yields. Furthermore, the reduction of groundwater recharge decreases summer base flows.

In summary, the following are the hydrologic impacts of unmitigated development:

- Increased peak flows
- Increased durations of high flows
- Increased stormwater runoff volumes

- Decreased groundwater recharge and base flows
- Seasonal flow volume shifts
- Altered wetland hydroperiods.

The resulting economic and ecological consequences of these hydrologic changes include the following:

- Increased flooding
- Increased stream erosion
- Degraded aquatic habitat
- Changes to wetland species composition.

Mitigation of Hydrologic Effects of Urbanization

Engineered facilities can mitigate many of the hydrologic changes associated with development. Detention facilities can maintain the rates and/or durations of high flows at predevelopment levels. Infiltration facilities can control flow volumes and increase groundwater recharge as well as control flow rates and durations. Conveyance problems can be avoided through analysis and appropriate sizing and design of conveyance facilities. Engineered mitigation of the hydrologic impacts of development include the following:

- Managing peak flow rates with detention facilities
- Managing high flow durations with detention facilities
- Reducing flow volumes and maintaining or enhancing groundwater recharge with infiltration facilities
- Avoiding flooding problems with appropriately sized and designed conveyance systems
- Bypassing erosion problems with tightlines.

Engineered facilities cannot mitigate all of the hydrologic impacts of development. Detention facilities do not mitigate seasonal volume shifts, wetland water level fluctuations, groundwater recharge reductions, or base flow changes. Such impacts can be further reduced through the use of Low Impact Development (LID) techniques, beginning with careful ***site*** planning. For instance, clustering of units to reduce impervious cover while maintaining ***site*** density is an effective way to limit hydrologic change. Preserving native vegetation and minimizing soil disturbance or compaction in pervious areas also reduces hydrologic change. Such non-engineered mitigation measures are encouraged by the County and are discussed in Chapter 5 of this manual and are referred to as Flow Control BMPs.

Other LID stormwater management approaches, such as permeable pavements, bioretention, green roofs, and rainwater harvesting can be effective in reducing increases in surface water volumes. The incorporation of these concepts in the design of the project is required, as detailed in Chapter 5 and Appendix C. Many of these approaches will result in a reduction in flow control facility size, so the flow control BMP requirements in Chapter 5 should be carefully considered and applied to maximize the benefits of this approach.

Detention Facility Concepts

The basic concept of a *detention facility* is simple: water is collected from developed areas and released at a slower rate than it enters the collection system. The excess of inflow over outflow is temporarily stored in a pond or a vault and is typically released over a few hours or a few days. The volume of storage needed is determined by (1) how much stormwater enters the facility (determined by the size and density of the contributing area), (2) how rapidly water is allowed to leave the facility, and (3) the level of hydrologic control the facility is designed to achieve.

To prevent increases in the frequency of flooding due to new development, detention facilities are often designed to **maintain peak flow rates at their predevelopment levels** for recurrence intervals of concern (e.g., 2- and 10-year). Such mitigation can prevent increases in the frequency of downstream flooding.

DRAFT

Facilities that control only peak flow rates, however, usually allow the duration of high flows to increase, which may cause increased erosion of the downstream system. For example, the magnitude of a 2-year flow may not increase, but the amount of time that flow rate occurs may double. Therefore, stream systems, including those with salmonid habitat, which require protection from erosion warrant detention systems that **control the durations of geomorphically significant flows** (flows capable of moving sediment). Such detention systems employ lower release rates and are therefore larger in volume.

3.1.2 FLOW CONTROL STANDARDS

Core Requirement #3 requires that flow control facilities be designed to one of three primary flow control standards or various modifications of these standards based on the protection needs of the downstream system. The three primary standards include Level 1 flow control, a peak matching standard; Level 2 flow control, a duration-matching standard; and Level 3 flow control, a duration-matching standard with an extreme peak-matching element added.

Level 1 Flow Control

Level 1 flow control is designed to control flood flows at their current levels and to maintain peak flows within the capacity of the conveyance system for most storm events. Specifically, Level 1 flow control requires **maintaining the predevelopment peak flow rates** for the 2-year and 10-year runoff events. This standard may be modified under certain conditions to only match the 10-year peak flow as allowed in Section 1.2.3.1A.

The Level 1 flow control standard is typically applied to basins where studies have shown that additional flow attenuation provides no significant benefit to the receiving waters.

DRAFT

Level 2 Flow Control

Level 2 flow control is designed to control the durations of geomorphically significant flows and thereby maintain or, in some applications, reduce existing channel and streambank erosion rates. A geomorphically significant flow is one that moves channel bedload sediments. The flow that initiates transport of channel sediments varies from channel to channel, but one-half of the 2-year flow is considered a good general estimate of the erosion-initiating flow. More specifically, Level 2 flow control requires **maintaining the durations of high flows** at their predevelopment levels for all flows greater than one-half of the 2-year peak flow up to the 50-year peak flow. The predevelopment peak flow rates for the 2-year and 10-year runoff events are also intended to be maintained when applying Level 2 flow control. The **predevelopment condition** to be assumed for matching durations varies depending on the County's conservation/protection goals for the downstream drainage system. One of three different predevelopment conditions will be applied as specified in Section 1.2.3.1. They include ***existing site conditions***, ***historic site conditions*** (forested), and 75/15/10 conditions (i.e., 75% forest, 15% grass, and 10% impervious surface). In most locations of the County, ***historic site conditions*** will apply.

The use of ***historic site conditions*** is intended to provide a hydrologic regime that more closely matches the conditions to which local aquatic species have adapted.

Level 3 Flow Control

Level 3 flow control is **intended to mitigate water level changes** in certain volume-sensitive water bodies such as lakes, wetlands, closed depressions where ***severe flooding problems*** have been documented. It is the most stringent standard applied in this manual (see Section 1.2.3.1). Because such water bodies act as natural flow dampeners, it is difficult to detain collected stormwater beyond the natural residence time of these systems. Therefore, the increased volume of runoff from new development inevitably increases the water level fluctuations of these water bodies. The Level 3 flow control standard provides additional storage and increases the detention time to minimize these downstream impacts.

This standard requires **maintaining the durations of high flows** at their predevelopment levels for all flows greater than one-half of the 2-year flow up to the 50-year flow and **holding the 100-year peak flow**

rate at its predevelopment level. The predevelopment peak flow rates for the 2-year and 10-year runoff events are also intended to be maintained when applying Level 3 flow control. As with the Level 2 standard, the **predevelopment condition** to be assumed for matching durations varies depending on the County's conservation/protection goals for the downstream drainage system.

This standard is primarily applied in the contributing areas of specific water bodies with ***severe flooding problems***, and which are known to be sensitive to flow volume changes.

3.1.3 HYDROLOGIC ANALYSIS USING CONTINUOUS MODELS

The Need for Continuous Hydrologic Modeling

This manual prescribes the use of a **continuous hydrologic model** for most hydrologic analyses rather than an event model. Event models such as the Santa Barbara Urban Hydrograph (SBUH) and the Soil Conservation Service (SCS) method were used in previous versions of this manual for all hydrologic analyses. A continuous model was chosen because hydrologic problems in western Washington are associated with the high volumes of flow from sequential winter storms rather than high peak flows from short duration, high intensity rainfall events. The continuous hydrologic analysis tool prescribed in this manual is the **King County Runoff Time Series (KCRTS)**, which is a variant of the Hydrologic Simulation Program-FORTRAN (HSPF) model.

Continuous models are well suited to accounting for the climatological conditions in the lowland Puget Sound area. Continuous models include algorithms that maintain a continuous water balance for a catchment to account for soil moisture and hydraulic conditions antecedent to each storm event (Linsley, Kohler, Paulhus, 1982), whereas event models assume initial conditions and only address single hypothetical storm events. As a result, continuous hydrologic models are more appropriate for evaluating runoff during the extended wet winters typical of the Puget Sound area.

DRAFT

The **drawbacks of event models** are summarized as follows:

- Event methods inherently overestimate peak flows from undeveloped land cover conditions. The overestimation is due, in part, to the assumption that runoff from forest and pasture land covers flows across the ground surface. In actuality, the runoff from forests and pastures, on till soils, is dominated by shallow subsurface flows (interflow) which have hydrologic response times much longer than those used in event methods. This leads to an over estimation of predeveloped peak flows, which results in detention facility release rates being overestimated and storage requirements being underestimated.
- A single event cannot represent the sequential storm characteristics of Puget Sound winters.
- Event models assume detention facilities are empty at the start of a design event, whereas actual detention facilities may be partially full as a result of preceding storms.
- Testing of event-designed detention facilities with calibrated, long-term continuous hydrologic simulations demonstrates that these facilities do not achieve desired performance goals.
- Event methods do not allow analysis of flow durations or water level fluctuations.

The **benefits of continuous hydrologic modeling** are summarized as follows:

- A continuous model accounts for the long duration and high precipitation volume of winter wet periods characterized by sequential, low-intensity rainfall events. Continuous simulation uses continuous long-term records of observed rainfall rather than short periods of data representing hypothetical storm events. As a result, continuous simulation explicitly accounts for the long duration rainfall events typically experienced in the Pacific Northwest as well as the effects of rainfall antecedent to major storm events.
- HSPF has been shown to more accurately simulate runoff from basins with a wide range of sizes and land covers using the regional parameters developed by the United States Geologic Survey (USGS).

- Continuous simulation allows direct examination of flow duration data for assessing the impacts of development on stream erosion and morphology. An event model, whether using a 1-day or a 7-day storm, cannot provide such information.
- A continuous model allows water level analysis for wetlands, lakes, and closed depressions whose water level regime is often dependent on seasonal runoff rather than on 1-day or 7-day event runoff.
- Continuous models produce flow control facilities that more accurately and effectively achieve desired performance goals.

The importance of continuous modeling in the Puget Sound area is illustrated in Figure 3.1.3.A (p. 3-8), which shows a small basin's runoff response to a series of winter storms and the outflow from a detention pond designed to control the peak annual flows from this basin. Note that the largest outflow from the detention pond corresponds not to the peak inflow on 11/6/86, but rather to the high volume of flow from the sequential storms beginning on 11/19/86. This demonstrates a key difference between continuous and event based models.

With an event model, designers are accustomed to working with a single design storm event (e.g., 10-year), which by definition has the same return period once routed through a reservoir (10-year inflow will always generate 10-year outflow). With a continuous model, flow recurrence estimates are based on annual peak flow rates, with each time series being analyzed independently. Events that generate annual peak inflows to a reservoir may not generate annual peak discharges from the reservoir. In other words, the runoff event containing the 10-year inflow peak, when routed, may not create the 10-year outflow peak. This is due to natural variability of storm peaks and volumes (e.g., high intensity/short duration thunderstorms as compared to moderate intensity/long duration winter storms) contained within a continuous record.

DRAFT

Requirements of Continuous Hydrologic Modeling

For the entire period of simulation, a continuous hydrologic model requires a continuous record of precipitation and evaporation at discrete time steps small enough to capture the temporal variability of hydrologic response, and it provides a continuous record of simulated flows at the same time step. The quicker a basin responds hydrologically (e.g., due to small size, land cover, or lack of detention), the smaller the time step should be. Time steps of 15 minutes or one hour are sufficient for most basins in the Puget Sound area.

The continuous hydrologic model must include mathematical representations of hydrologic processes to determine the fate and movement of rainfall. For example, a good continuous hydrologic model must include representations of infiltration processes to determine how much water infiltrates the soil and how much runs off the surface. It must represent shallow and deep soil storage as well as the release of subsurface water to streams via interflow and groundwater flow, and it must also account for the loss of soil water to the atmosphere via evapotranspiration between rainfall events. The benefit of all this computation is a complete hydrologic assessment including information on peak flow rates, flow durations, storm volumes, seasonal volumes, annual volumes, and water levels of receiving bodies.

FIGURE 3.1.3.A EFFECTS OF SEQUENTIAL STORMS ON DETENTION PERFORMANCE

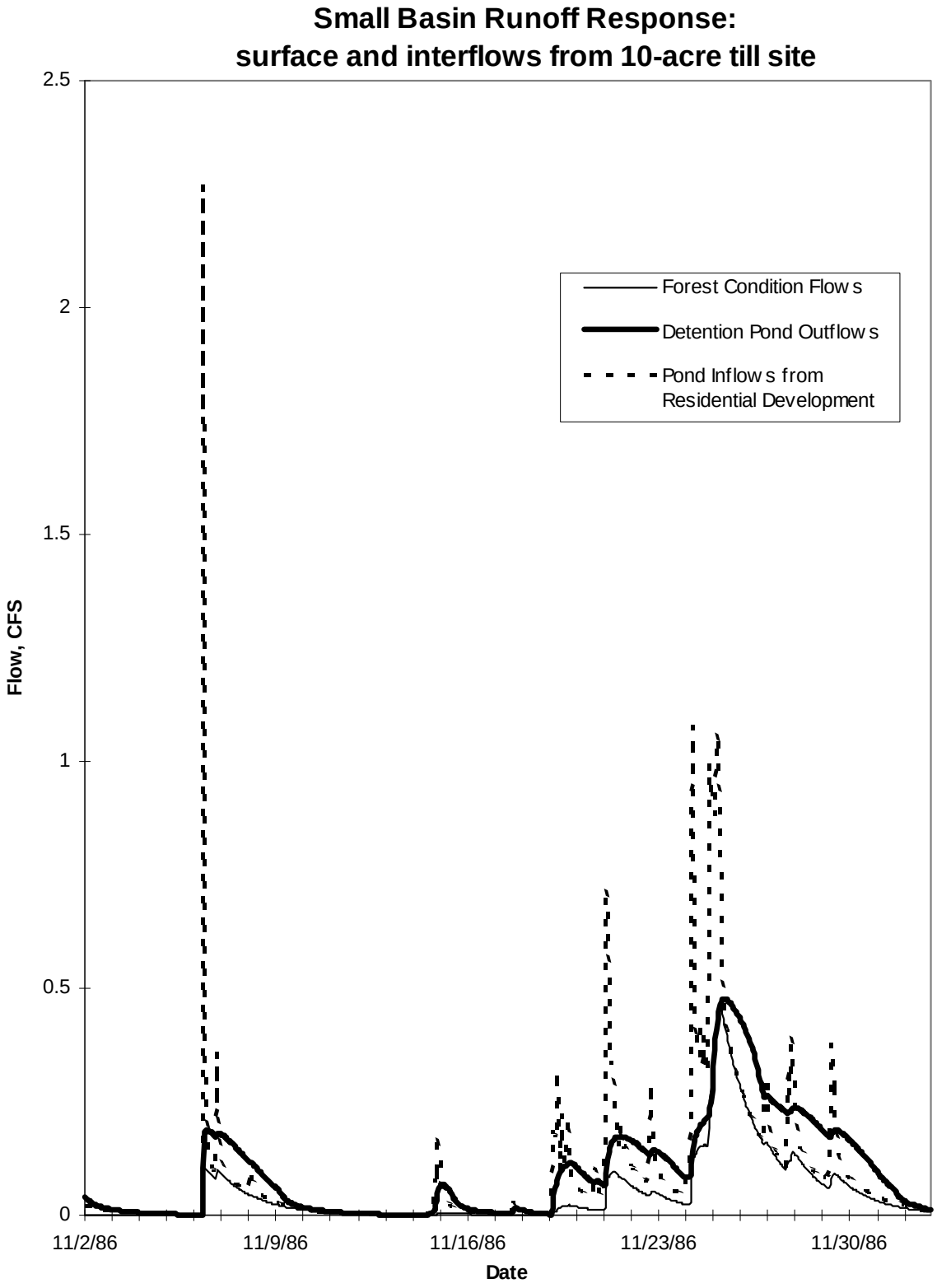

3.2 RUNOFF COMPUTATION AND ANALYSIS METHODS

This section presents the following four runoff computation methods accepted for hydrologic analysis and design in King County:

- The **Rational Method** described below and detailed in Section 3.2.1 (p. 3-11)
- The **TR-55 or SBUH methods** described below.
- The **King County Runoff Time Series (KCRTS)/Runoff Files method** described below and detailed in Section 3.2.2 (p. 3-20)
- The **Hydrologic Simulation Program-FORTRAN (HSPF) model** described below and detailed in Section 3.2.3 (p. 3-35).

Methods for analysis and design of detention storage and water levels are also presented in "Storage Routing/Water Level Analysis Methods," Section 3.2.4 (p. 3-36).

❑ ACCEPTABLE USES OF RUNOFF COMPUTATION METHODS

Acceptable uses of the four runoff computation methods are summarized below and in Table 3.2 (p. 3-10):

- Rational Method: This method is most appropriate for sizing new conveyance systems that drain smaller, quickly responding tributary areas (i.e., less than 10 acres) where very short, intense storms tend to generate the highest peak flows. The Rational Method may also be used for conveyance sizing in any size basin if the attenuation effects of existing storage features within the basin are ignored.
- TR-55/SBUH Methods: The Soil Conservation Service (SCS) TR-55 method or the SBUH method of the 1990 King County *Surface Water Design Manual* may be used for conveyance sizing where tributary areas are greater than or equal to 10 acres and if storage features are ignored. The peak flows from these single-event models are considered conservative for larger tributary areas if the flows are not routed through existing storage features. These methods are not detailed in this manual; refer to SCS Publication 210-VI-TR-55, Second Edition (June 1986) or the 1990 *SWDM*.
- KCRTS/Runoff Files Method: This method is the most versatile for quickly performing many of the computations summarized in Table 3.2 (p. 3-10). For conveyance sizing and analysis, the peak flows from KCRTS are most accurate where tributary areas are greater than or equal to 10 acres and when the shortest possible time step (15 minutes) is used with flowpath adjustments made to reflect the hydrologic responsiveness of the tributary area (see Section 3.3.3). KCRTS may also be used for tributary areas less than 10 acres where there is a significant storage feature(s). For sizing and analysis of storage features and volume-based water quality facilities, KCRTS works equally well when using hourly time steps for determination of predevelopment discharges and for routing purposes (see Sections 3.3.1 and 3.3.2). King County requires hourly time steps for sizing of all flow control facilities to provide consistent management of surface water and protect against cumulative increases in peak flows on a basin-wide basis. *Note: The KCRTS runoff files were developed using local historical precipitation and evaporation data, so application of the King County data outside the King County vicinity is discouraged. Contact DNRP for information on generating runoff files for other gage locations. An HSPF-level of historical meteorological data is required.*
- HSPF Model: For projects in Large Project Drainage Review (see Section 1.1.2.4), the County may require HSPF modeling for formulating a Master Drainage Plan (see *Master Drainage Planning for Large Site Developments - Process and Requirement Guidelines* available from DNRP or DDES). The County also generally encourages use of HSPF for tributary areas larger than 200 acres. The model can be used wherever KCRTS is allowed for sizing and analysis of conveyance systems, flow control facilities, and water quality facilities. For such projects draining to a wetland or potentially

DRAFT

impacting groundwater resources or stream base flows, the County may require the collection of actual rainfall and runoff data to be used in developing and calibrating the HSPF model.

TABLE 3.2 ACCEPTABLE USES OF RUNOFF COMPUTATION METHODS

TYPE OF COMPUTATION	APPLIED TO	Rational Method	TR 55/SBUH	KCRTS	HSPF
PEAK FLOW CONVEYANCE SIZING INC. TESC[1] (DESIGN FLOWS) (See Chapter 4 for hydraulic analysis procedures)	**Tributary Areas < 10 ac** (measured to individual conveyance elements)	REQUIRED for undetained areas,[2] and OKAY for detained areas if no storage routing[3] is performed		OKAY if majority of tributary area is detained[4] and 15-minute time steps with flowpath adjustments[5] are used	OKAY if majority of tributary area is detained[4] and 15-minute time steps with flowpath adjustments[5] are used
	Tributary Areas ≥ 10 ac	OKAY if no storage routing[3] is performed	OKAY if no storage routing[3] is performed	OKAY if using 15-minute time steps with flowpath adjustments[5] (storage routing is allowed)	OKAY if using 15-minute time steps with flowpath adjustments[5] (storage routing is allowed)
LEVEL-POOL ROUTING FLOW CONTROL (NEW/EXIST.) & WQ FACILITY SIZING AND ANALYSIS	**Projects in Full Drainage Review**			OKAY (must use 1-hour time steps)	OKAY (must use 1-hour time steps)
	Projects in Large Project Drainage Review			MAY BE ALLOWED[6] (must use 1-hour time steps)	MAY BE REQUIRED[6] (must use 1-hour time steps)
DOWNSTREAM ANALYSIS	**Projects in Full or Targeted Drainage Review**	OKAY if no storage routing[3] is performed	OKAY for tributary areas ≥ 10 ac. if no storage routing[3] is performed	OKAY if using 15-minute time steps with flowpath adjustments[5]	OKAY if using 15-minute time steps with flowpath adjustments[5]
	Projects in Large Project Drainage Review	MAY BE ALLOWED[6] if used as described in the box above	MAY BE ALLOWED[6] if as described in the box above	MAY BE ALLOWED[6] if used as described in the box above	
PEAK FLOWS FOR APPLYING EXEMPTIONS & THRESHOLDS	**All Projects**			OKAY (must use 1-hour time steps)	OKAY (must use 1-hour time steps)

Notes:

(1) Water quality design flow rates are determined as described in Section 6.2.1 (p. 6-17).

(2) *Undetained areas* are those upstream of detention facilities or other storage features.

(3) *Storage routing* uses the Level Pool Routing technique (described in Section 3.2.4) or other similar method to account for the attenuation of peak flows passing through a detention facility or other storage feature.

(4) The majority of the tributary area is considered *detained* if the runoff from more than 50% of the tributary area is detained by a detention facility or other storage facility.

(5) See Section 3.3.3 (p. 3-46) for details on *flowpath adjustments*.

(6) For projects in Large Project Drainage Review, the selection of methodology for detention sizing and/or downstream analysis becomes a site-specific or basin-specific decision that is usually made by DDES during the scoping process for master drainage plans. Guidelines for selecting KCRTS, HSPF, or calibrated HSPF are found in the King County publication *Master Drainage Planning for Large or Complex Site Developments*, available from DNRP or DDES.

DRAFT

3.2.1 RATIONAL METHOD

The Rational Method is a simple, conservative method for analyzing and sizing conveyance elements serving small drainage subbasins, subject to the following specific **limitations**:

- Only for use in predicting peak flow rates for sizing conveyance elements
- Drainage subbasin area A cannot exceed 10 acres for a single peak flow calculation
- The time of concentration T_c must be computed using the method described below and cannot exceed 100 minutes. It is also set equal to 6.3 minutes when computed to be less than 6.3 minutes.
  Note: Unlike other methods of computing times of concentration, the 6.3 minutes is not an initial collection time to be added to the total computed time of concentration.

❑ RATIONAL METHOD EQUATION

The following is the traditional Rational Method equation:

$$Q_R = CI_RA \qquad (3\text{-}1)$$

where Q_R = peak flow (cfs) for a storm of return frequency R
C = estimated runoff coefficient (ratio of rainfall that becomes runoff)
I_R = peak rainfall intensity (inches/hour) for a storm of return frequency R
A = drainage subbasin area (acres)

DRAFT

"*C*" Values

The allowable runoff coefficients to be used in this method are shown in Table 3.2.1.A (p. 3-14) by type of land cover. These values were selected following a review of the values previously accepted by King County for use in the Rational Method and as described in several engineering handbooks. The values for single family residential areas were computed as composite values (as illustrated in the following equation) based on the estimated percentage of coverage by roads, roofs, yards, and unimproved areas for each density. For drainage basins containing several land cover types, the following formula may be used to compute a composite runoff coefficient, C_c:

$$C_c = (C_1A_1 + C_2A_2 + ... + C_nA_n)/A_t \qquad (3\text{-}2)$$

where A_t = total area (acres)
$A_{1,2,...n}$ = areas of land cover types (acres)
$C_{1,2,...n}$ = runoff coefficients for each area land cover type

"I_R" Peak Rainfall Intensity

The peak rainfall intensity I_R for the specified design storm of return frequency R is determined using a unit peak rainfall intensity factor i_R in the following equation:

$$I_R = (P_R)(i_R) \qquad (3\text{-}3)$$

where P_R = the total precipitation at the ***project site*** for the 24-hour duration storm event for the given return frequency. Total precipitation is found on the Isopluvial Maps in Figure 3.2.1.A through Figure 3.2.1.D beginning on page 3-15.
i_R = the unit peak rainfall intensity factor

The unit peak rainfall intensity factor i_R is determined by the following equation:

$$i_R = (a_R)(T_c)^{(-b_R)} \quad (3\text{-}4)$$

where T_c = time of concentration (minutes), calculated using the method described below and subject to equation limitations ($6.3 \le T_c \le 100$)

a_R, b_R = coefficients from Table 3.2.1.B (p. 3-14) used to adjust the equation for the design storm return frequency R

This "i_R" equation was developed by DNRP from equations originally created by Ron Mayo, P.E. It is based on the original **Renton/Seattle Intensity/Duration/Frequency (I.D.F.) curves**. Rather than requiring a family of curves for various locations in King County, this equation adjusts proportionally the Renton/Seattle I.D.F. curve data by using the 24-hour duration total precipitation isopluvial maps. This adjustment is based on the assumption that the localized geo-climatic conditions that control the total volume of precipitation at a specific location also control the peak intensities proportionally.

Note: Due to the mathematical limits of the equation coefficients, values of T_c less than 6.3 minutes or greater than 100 minutes cannot be used. Therefore, real values of T_c less than 6.3 minutes must be assumed to be equal to 6.3 minutes, and values greater than 100 minutes must be assumed to be equal to 100 minutes.

"T_c" Time of Concentration

The time of concentration is defined as the time it takes runoff to travel overland (from the onset of precipitation) from the most hydraulically distant location in the drainage basin to the point of discharge. *Note: When C_c (see Equation 3-2) of a drainage basin exceeds 0.60, it may be important to compute T_c and peak rate of flow from the impervious area separately.* The computed peak rate of flow for the impervious surface alone may exceed that for the entire drainage basin using the value at T_c for the total drainage basin. The higher of the two peak flow rates shall then be used to size the conveyance element.

T_c is computed by summation of the travel times T_t of overland flow across separate flowpath segments defined by the six categories of land cover listed in Table 3.2.1.C (p. 3-14), which were derived from a chart published by the Soil Conservation Service in 1975. The equation for time of concentration is:

$$T_c = T_1 + T_2 + \ldots + T_n \quad (3\text{-}5)$$

where $T_{1,2,\ldots n}$ = travel time for consecutive flowpath segments with different land cover categories or flowpath slope

Travel time for each segment t is computed using the following equation:

$$T_t = \frac{L}{60V} \quad (3\text{-}6)$$

where T_t = travel time (minutes) *Note: T_t through an open water body (such as a pond) shall be assumed to be zero with this method*

L = the distance of flow across a given segment (feet)

V = average velocity (fps) across the land cover = $k_R \sqrt{s_o}$

where k_R = time of concentration velocity factor; see Table 3.2.1.C

s_o = slope of flowpath (feet/feet)

DRAFT

DRAFT

TABLE 3.2.1.A RUNOFF COEFFICIENTS - "*C*" VALUES FOR THE RATIONAL METHOD

General Land Covers		Single Family Residential Areas*	
Land Cover	*C*	Land Cover Density	*C*
Dense forest	0.10	0.20 DU/GA (1 unit per 5 ac.)	0.17
Light forest	0.15	0.40 DU/GA (1 unit per 2.5 ac.)	0.20
Pasture	0.20	0.80 DU/GA (1 unit per 1.25 ac.)	0.27
Lawns	0.25	1.00 DU/GA	0.30
Playgrounds	0.30	1.50 DU/GA	0.33
Gravel areas	0.80	2.00 DU/GA	0.36
Pavement and roofs	0.90	2.50 DU/GA	0.39
Open water (pond, lakes, wetlands)	1.00	3.00 DU/GA	0.42
		3.50 DU/GA	0.45
		4.00 DU/GA	0.48
		4.50 DU/GA	0.51
		5.00 DU/GA	0.54
		5.50 DU/GA	0.57
		6.00 DU/GA	0.60

* Based on average 2,500 square feet per lot of impervious coverage.
For combinations of land covers listed above, an area-weighted "C_c x A_t" sum should be computed based on the equation C_c: x A_t = (C_1 x A_1) + (C_2 x A_2) + ...+(C_n x A_n), where A_s = (A_1 + A_2 + ...+A_n), the total drainage basin area.

DRAFT

TABLE 3.2.1.B COEFFICIENTS FOR THE RATIONAL METHOD "i_R" EQUATION

Design Storm Return Frequency	a_R	b_R
2 years	1.58	0.58
5 years	2.33	0.63
10 years	2.44	0.64
25 years	2.66	0.65
50 years	2.75	0.65
100 years	2.61	0.63

TABLE 3.2.1.C k_R VALUES FOR T_t USING THE RATIONAL METHOD

Land Cover Category	k_R
Forest with heavy ground litter and meadow	2.5
Fallow or minimum tillage cultivation	4.7
Short grass pasture and lawns	7.0
Nearly bare ground	10.1
Grassed waterway	15.0
Paved area (sheet flow) and shallow gutter flow	20.0

FIGURE 3.2.1.A 2-YEAR 24-HOUR ISOPLUVIALS

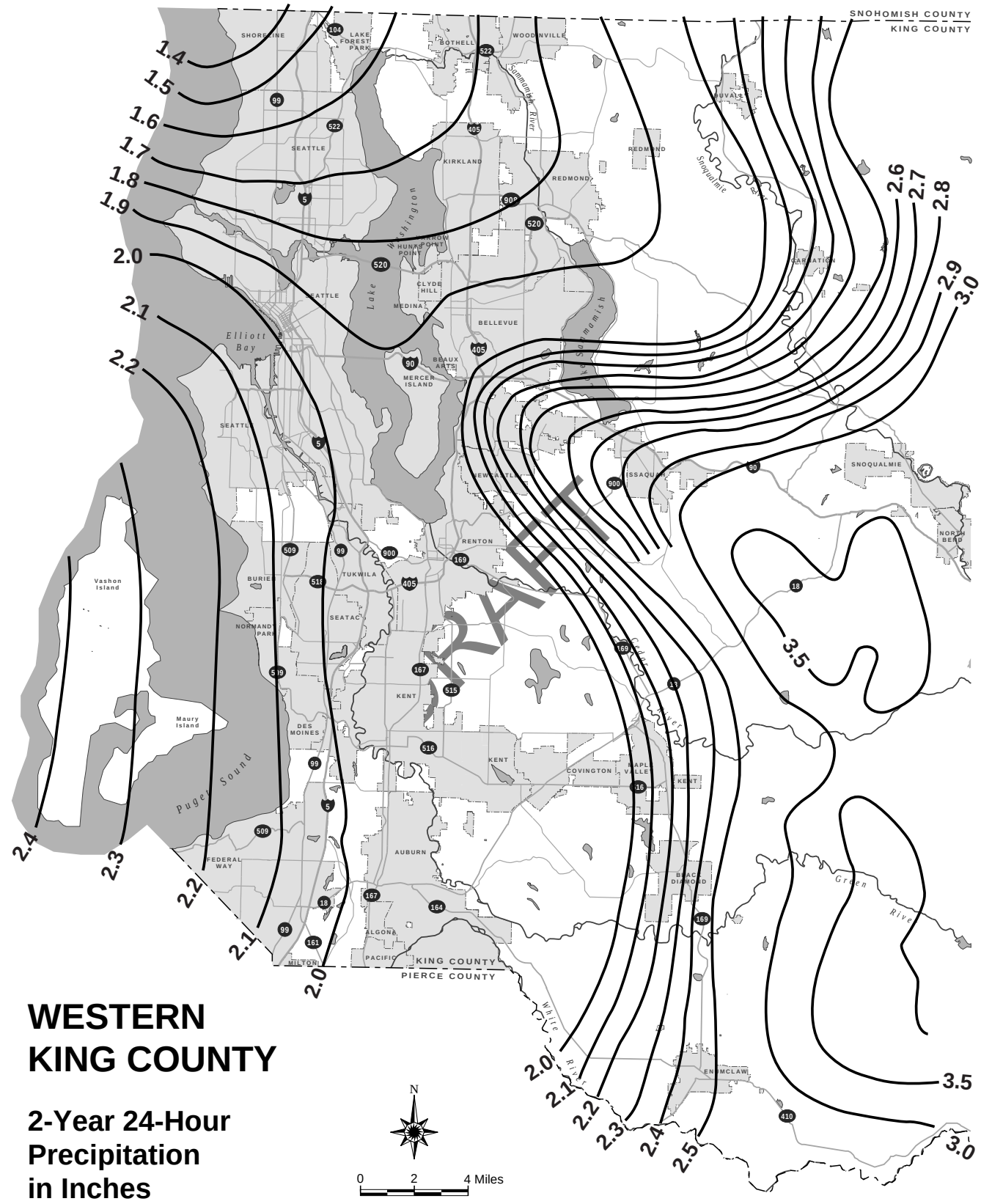

FIGURE 3.2.1.B 10-YEAR 24-HOUR ISOPLUVIALS

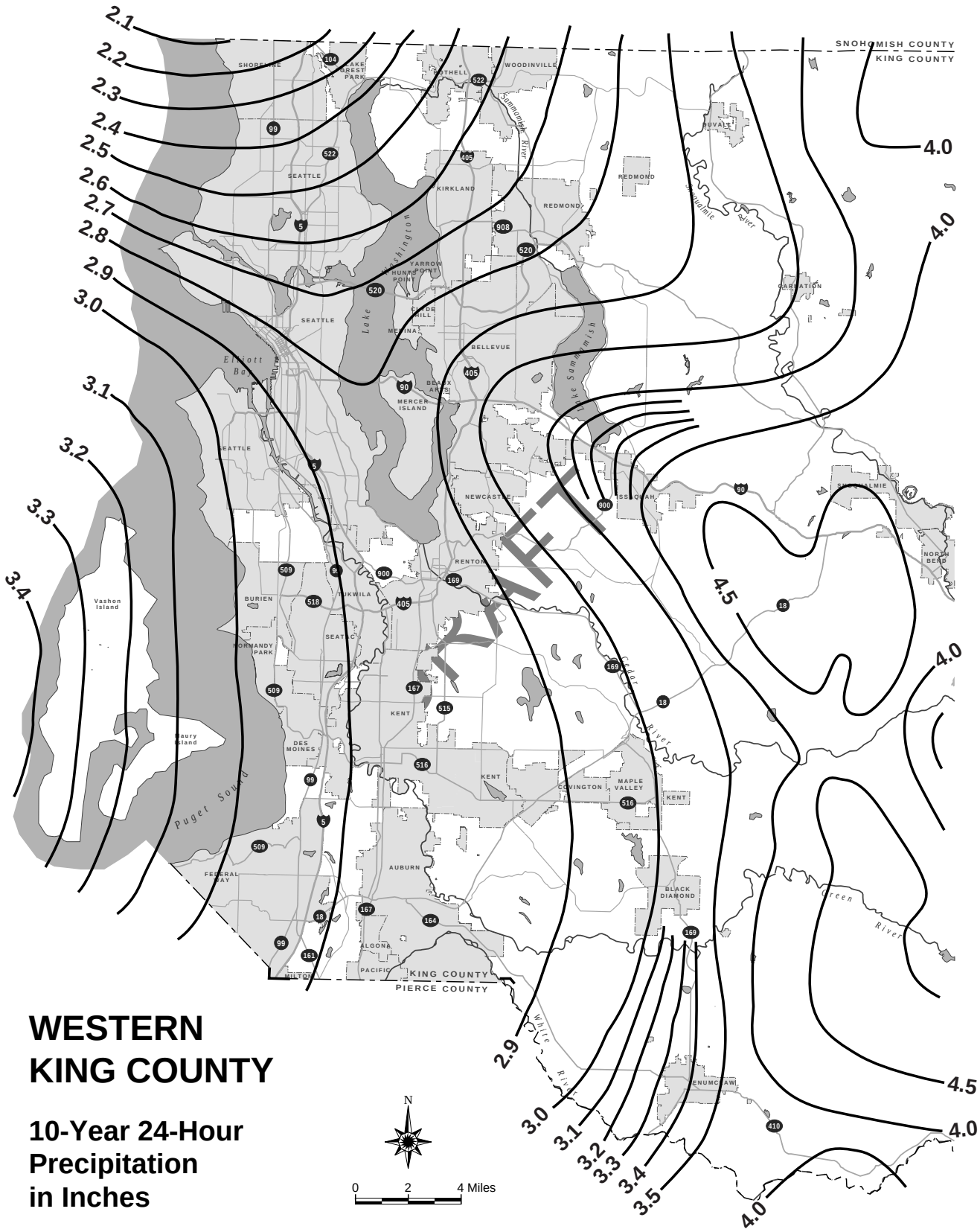

FIGURE 3.2.1.C 25-YEAR 24-HOUR ISOPLUVIALS

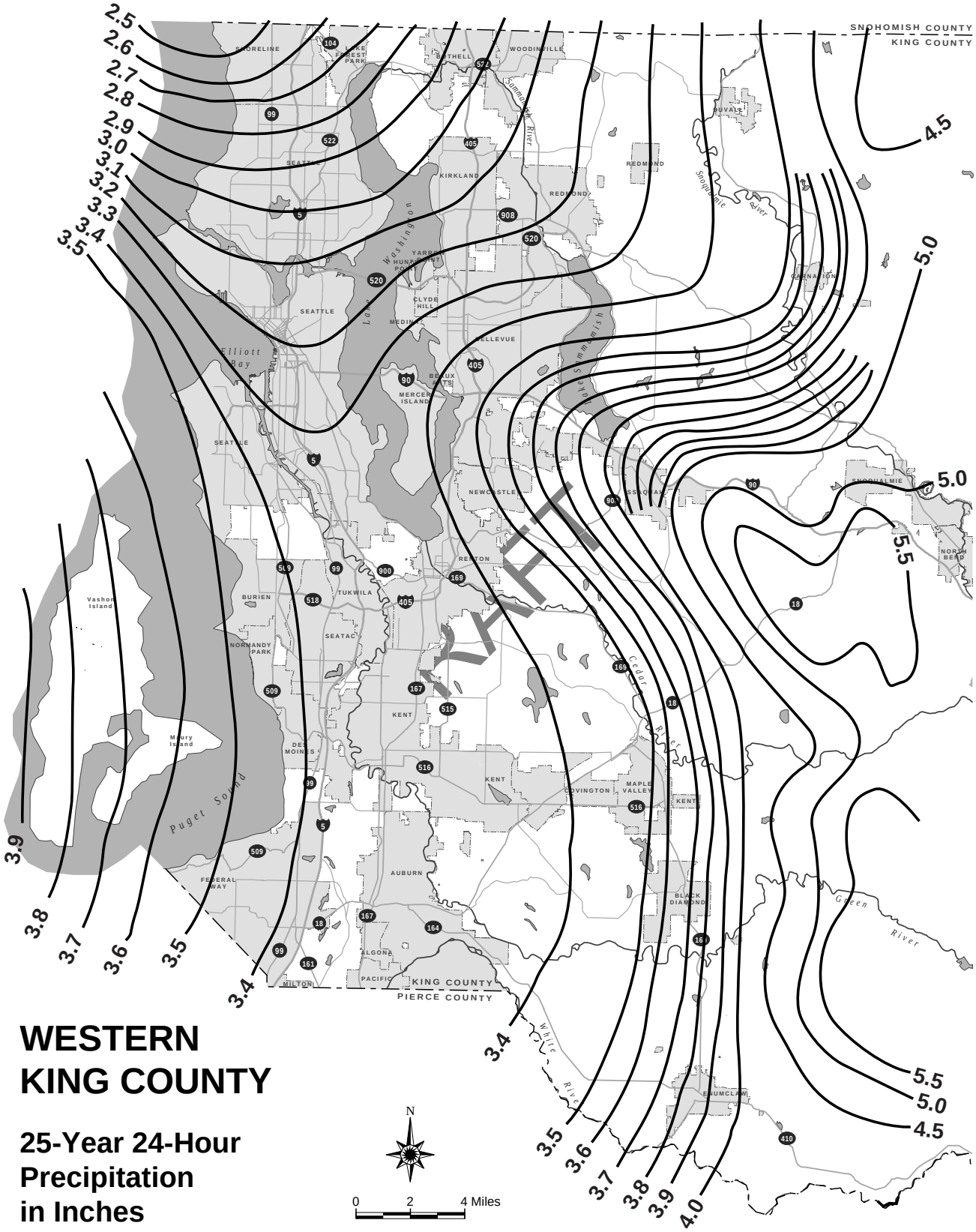

FIGURE 3.2.1.D 100-YEAR 24-HOUR ISOPLUVIALS

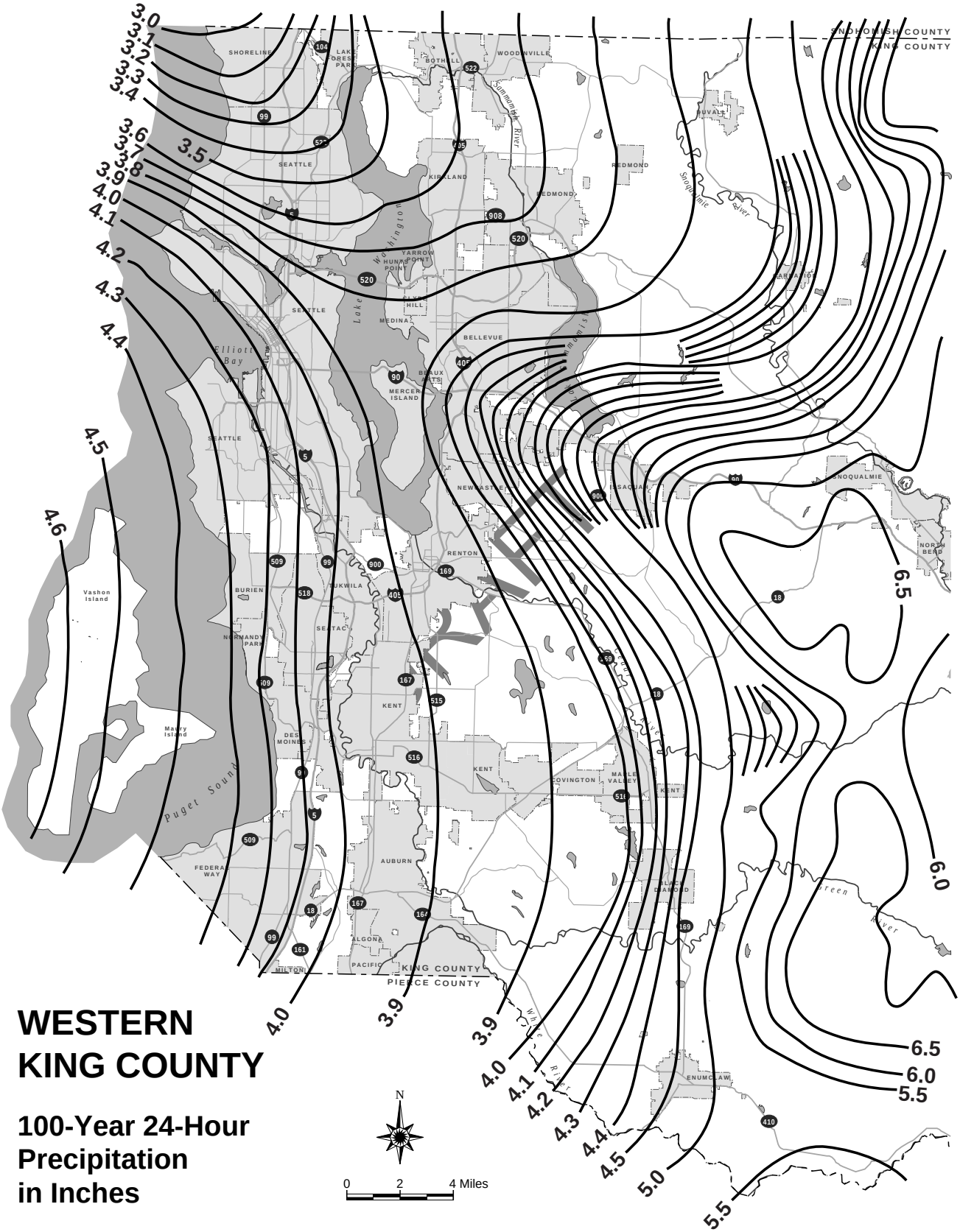

❑ RATIONAL METHOD EXAMPLE

Compute the peak flow Q_{25} to size a new roadway cross culvert for a 9.8-acre drainage basin east of Kent, P_{25} = 3.42 inches.

Given: AREAS

A_1 = 4.3 acres of single family residential area at 3.8 DU/GA
A_2 = 2.3 acres of light forest
A_3 = 3.2 acres of pasture
A_t = 9.8 total acres

DESCRIPTION OF FLOWPATH SEGMENTS FOR T_c

L_1	=	300 feet	s_1	=	0.08	forest land cover	k_R = 2.5
L_2	=	200 feet	s_2	=	0.03	meadow	k_R = 2.5
L_3	=	1000 feet	s_3	=	0.015	grassed waterway (ditch)	k_R = 15.0

Compute: COMPOSITE RUNOFF COEFFICIENT C_c

A_1: C_1 = From Table 3.2.1.A (p. 3-14), C for 4.00 DU/GA = 0.48, C for 3.50 DU/GA = 0.45. Therefore, C_1 for 3.80 DU/GA = 0.47 by visual interpolation.
A_2: C_2 = 0.15
A_3: C_3 = 0.20

C_c = $[(C_1 \times A_1) + (C_2 \times A_2) + (C_3 \times A_3)]/A_t$
= $[(0.47 \times 4.3) + (0.15 \times 2.3) + (0.20 \times 3.2)]/9.8$ = <u>0.31</u>

PEAK RAINFALL INTENSITY I_R

First, compute T_c:

$$T_1 = \frac{L_1}{60V_1} = \frac{L_1}{60(k_R\sqrt{s_1})} = \frac{300}{60(2.5\sqrt{0.08})}$$

= <u>7 minutes</u>

$$T_2 = \frac{L_2}{60V_2} = \frac{L_2}{60(k_R\sqrt{s_2})} = \frac{200}{60(2.5\sqrt{0.03})}$$

= <u>8 minutes</u>

$$T_3 = \frac{L_3}{60V_3} = \frac{L_3}{60(k_R\sqrt{s_3})} = \frac{1000}{60(15\sqrt{0.015})}$$

= <u>9 minutes</u>

T_c = $T_1 + T_2 + T_3 = 7 + 8 + 9$ = <u>24 minutes</u>

Second, compute i_R for R = 25:

$$i_{25} = (a_R)(T_c)^{(-b_R)} = (2.66)(24)^{-(0.65)} = \underline{0.34}$$

Third, compute I_R for R = 25:

$$I_{25} = (P_{25})(i_{25}) = (3.42)(0.34) = \underline{1.16}$$

PEAK RUNOFF RATE

$Q_{25} = C\, I_{25}\, A = C_c\, I_{25}\, A = (0.31)(1.16)(9.8)$ = <u>3.5 cfs</u>

DRAFT

3.2.2 KCRTS/RUNOFF FILES METHOD

The KCRTS/runoff files implementation of HSPF was developed as a tool that has the accuracy and versatility of HSPF but is much simpler to use and provides a framework for efficient design of onsite stormwater detention facilities. This section describes the Runoff Files Method and KCRTS software. The term *runoff files* refers to a database of continuous flows presimulated by HSPF. The KCRTS software package is a tool for using this flow database.

The Runoff Files method was developed as a hydrologic modeling tool for western King County to produce results (design flows, detention pond sizing, etc.) comparable to those obtained with the U.S. Environmental Protection Agency's HSPF model but with significantly less effort. This is achieved by providing the user with a set of 15-minute and hourly time series files of unit area land surface runoff ("runoff files") presimulated with HSPF for a range of land cover conditions and soil types within King County. The design flows are estimated and detention facilities are designed by directly accessing and manipulating the runoff file data by means of the KCRTS software.

At present, the basic capabilities of the KCRTS software include:

- Estimating time series of flows for a specified land use and location within King County
- Analyzing flow frequency and duration
- Analyzing water surface frequency and duration
- Plotting analysis results
- Sizing detention facilities.

DRAFT

❑ DEVELOPMENT OF THE RUNOFF FILES

To compile the runoff files, the land surface hydrologic response (represented by a time series of unit area land surface runoff) was generated by HSPF with regional parameters for a variety of land use classifications and for two long-term (50-year) hourly rainfall stations, one representing the western lowlands of King County (Sea-Tac Airport) and the other representing the eastern foothills (Landsburg). Runoff time series were generated with data from these stations for the following **eight soil/land cover types:**

- Impervious
- Till forest
- Till pasture
- Till grass
- Outwash forest
- Outwash pasture
- Outwash grass
- Wetland.

While HSPF simulates surface runoff, interflow, and groundwater flow**, only the surface and interflow components of runoff are included in the runoff files**. The large majority of developments are relatively small, and it is often not appropriate to include groundwater flows in estimates of the surface or near-surface runoff from a ***site***. For example, in designing detention facilities for a small development on till soils, the total surface or near-surface runoff from the ***site*** would usually consist of surface runoff plus interflow. Groundwater generated on the ***site*** would seep through the underlying till and may reappear (in springs or seeps) some considerable distance from the ***site***. **An interflow component of runoff is not computed for outwash soils** because there is assumed to be no low-permeability subsurface layer. Runoff files for onsite detention facility design were thus generated with the following components:

- Till soils → surface flow + interflow
- Outwash soils → surface flow
- Wetland soils → surface flow + interflow
- Impervious surfaces → surface flow.

The higher elevation eastern portions of King County have a temperature variable hydrologic cycle. **Snowmelt is not accounted for** in either the Sea-Tac or Landsburg runoff files. Additional work may be done to develop snowmelt-based runoff files for use in these areas. In the absence of additional information, analysis will be performed using the Landsburg runoff files scaled by 1.2 for all points east of the 1.2 isoline in Figure 3.2.2.A (p. 3-23).

3.2.2.1 GENERATING TIME SERIES

Most hydrologic analyses will require time series of flows for different land use conditions. For example, to size a Level 1 flow control detention facility, 2- and 10-year peaks from the facility discharge time series must be compared with 2- and 10-year peaks from the predevelopment time series. To generate a flow time series with KCRTS, the KCRTS user needs to specify the following:

1. The **rainfall region** of the county within which the project lies (i.e., determine the rainfall station—Sea-Tac or Landsburg—used in the analysis; see Figure 3.2.2.A, p. 3-23).
2. A multiplier or **regional scale factor** applied to the runoff files to account for variations in rainfall volumes between the ***project site*** and the rainfall station (see Figure 3.2.2.A, p. 3-23).
3. The **time step** to be used in the analysis:
   - Hourly — Used for detention sizing and volume analysis
   - 15 minutes — Used for peak flow analysis of conveyance systems; requires length and slope of the longest unconcentrated surface flowpath for each developed land cover type.
4. The **record type** used in the analysis:
   - Reduced 8-year record, OR
   - Historical — complete historical runoff record may be used.
5. The **amount of land** (acreage) of each soil/cover group for the subbasin under study.
6. The **percentage of impervious area** that is effectively connected to the drainage system.

Generating a new time series is simply a matter of entering the above data into KCRTS under the **"Create New Time Series" routine**. The KCRTS software will then access the appropriate runoff files (representing unit area runoff), scale those files to reflect the location of the ***project site***, scale the files again according to the area of each soil/cover group contained on the ***project site*** or subbasin in question, and then sum the scaled files to produce a time series of simulated flows from the ***site***.

❑ SELECTION OF PRECIPITATION RECORD AND REGIONAL SCALE FACTOR

As noted in the previous section, runoff files for KCRTS were developed using data from two rainfall stations, Sea-Tac Airport and Landsburg. The regions within King County to which data from the two stations apply are shown in Figure 3.2.2.A (p. 3-23). These regions were delineated such that data from Sea-Tac Airport is applied to the drier western part of the county, while data from Landsburg is applied to the wetter eastern part of the county, including developable areas in the Cascade foothills. The line separating the two regions was based on daily rainfall depths.

The *regional scale factor* is a geographically variable multiplier applied to the flow time series to account for the considerable variations in rainfall amounts, and hence runoff, within the two regions, especially in

DRAFT

the eastern region represented by rainfall data from Landsburg. Values of the scaling factor are interpolated from Figure 3.2.2.A (p. 3-23). A regional scale factor of 1.0 should be used for the area between the two ST 1.0 isolines.

A factor of 1.2 is applied to the Landsburg runoff files for all points east of the 1.2 isoline on Figure 3.2.2.A. While there is considerably greater variation in runoff in eastern King County than implied by the 1.2 multiplier, there is insufficient data to justify further refinement.

DRAFT

FIGURE 3.2.2.A RAINFALL REGIONS AND REGIONAL SCALE FACTORS

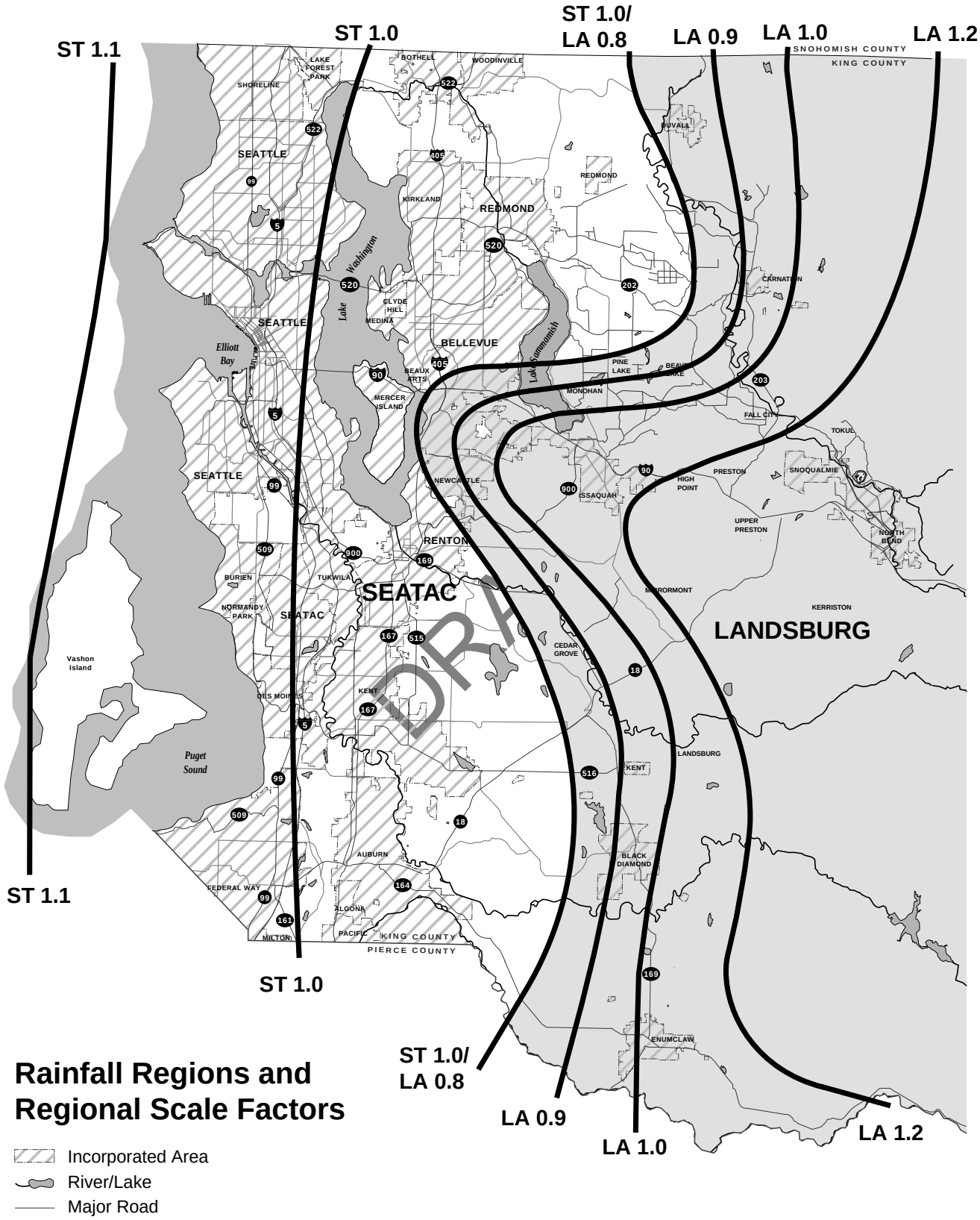

❑ SELECTION OF RUNOFF FILE TIME STEPS AND RECORD TYPES

KCRTS runoff files are provided in both hourly and 15-minute time steps. The 15-minute time series were generated from the original historical hourly precipitation records, which were synthetically disaggregated into 15-minute time steps using 15-minute rainfall records from hydrologically similar gages.

The length of the runoff file records is periodically changed to include new data. As of January 1, 2005, the KCRTS historical record for SeaTac contains 50 years of simulated flow data. Application of the time steps and record types are shown in Table 3.2.2.A below.

TABLE 3.2.2.A SELECTION OF RUNOFF FILE TIME STEPS AND RECORD TYPES

Analysis Type	Hourly Time Steps	15-Minute Time Steps	Runoff File Record Type[1]
Flow Control Analysis			
• Existing Conditions (target release rates)	Required[2]		Reduced or Full Historical
• Developed Conditions (facility inflows)	Acceptable	Acceptable	Reduced or Full Historical
Water Quality Design Flow			
• Preceding Detention (60% 2-year rate)		Required	Reduced or Full Historical
• Following Detention (full 2-year rate)	Acceptable	Acceptable	Reduced or Full Historical
Sand Filter Volume	Acceptable	Acceptable	Reduced or Full Historical
Conveyance/Overflow Features		Required	Reduced or Full Historical
Level 2, 3 Offsite Analyses	Acceptable for volume analysis	Required for peak flow analysis	Reduced or Full Historical
Closed Depression with Severe Flooding Problem[3]	Acceptable	Acceptable	Full Historical

Notes:

(1) The runoff files do not contain a groundwater component. Therefore, KCRTS should be applied with caution where sources of groundwater express themselves as surface runoff, and the program should not be used to determine summer low-flow conditions in a stream. However, most analyses in this manual are of peak flow conditions where the groundwater contribution is usually small.

(2) Hourly time steps are used to determine predeveloped (target) release rates for all projects to provide for consistent control and protection against cumulative increases in peak flows. If 15-minute time steps were used, the predeveloped discharge rates from more quickly responding sites would be higher, and the onsite detention facilities under developed conditions would extend these rates for several hours. This extension of higher flow rates increases the chances that they will occur simultaneously with the peak flows from slower responding sites to create higher overall peaks in the downstream drainage system.

(3) See Section 3.3.6 (p. 3-51).

DRAFT

❑ CATEGORIZATION OF SOIL TYPES AND LAND COVER

The Runoff Files method with KCRTS currently supports eight land use classifications: till forest, till pasture, till grass, outwash forest, outwash pasture, outwash grass, wetland, and impervious. These classifications incorporate both the effects of soil type and land cover. In the SCS method, four different hydrologic soil groups are defined (A, B, C, and D) based on soil type as mapped by the SCS. The SCS also defines hydrologic response for about a dozen different land use or cover types. The SCS method therefore allows the user a considerably greater degree of flexibility in defining land cover and soil types than does KCRTS. However, the flexibility and apparent detail available with the SCS method cannot be supported on the basis of the data used to develop that method. The Runoff Files method minimizes the number of land use classifications, thereby simplifying both the analysis and review of development proposals.

KCRTS Soil Groups

Under KCRTS, three soil groups are currently defined: till, outwash, and wetland.

Till Soils

Till soils are underlain at shallow depths by relatively impermeable glacial till. The principal SCS soil group within King County classified as a till soil is the Alderwood series (SCS hydrological soil group C), which is the most common soil type throughout the western part of the county. The hydrologic response of till soils in an undeveloped, forested state is characterized by relatively slight surface runoff, substantial interflow occurring along the interface between the till soil and the underlying glacial till, and slight groundwater seepage into the glacial till.

Also included in the KCRTS till soil group are bedrock soils, primarily Beausite and Ovall soils, which are underlain by either sandstone or andesite bedrock, and a large group of alluvial soils.

Alluvial soils are found in valley bottoms. These are generally fine-grained and often have a high seasonal water table. There has been relatively little experience in calibrating the HSPF model to runoff from these soils, so in the absence of better information, these soils have been grouped as till soils. Most alluvial soils are classified by the SCS in hydrologic soil groups C and D.

DRAFT

Outwash Soils

Outwash soils are formed from highly permeable sands and gravels. The principal SCS soil group classified as an outwash soil is the Everett series. Where outwash soils are underlain at shallow depths (less than 5 feet) by glacial till or where outwash soils are saturated, they should be treated as till soils for the purpose of KCRTS application.

Wetland Soils

Wetland soils have a high water content, are poorly drained, and are seasonally saturated. For the purposes of applying KCRTS, wetland soils can be assumed to coincide with wetlands as defined in the critical areas code (KCC 21A.24).

The approximate correspondence between SCS soil types and the appropriate KCRTS soil group is given in Table 3.2.2.B (p. 3-26). If the soils underlying a proposed project have not been mapped, or if existing soils maps are in error or not of sufficient resolution, then a soils analysis and report shall be prepared and stamped by a ***civil engineer*** with expertise in soils to verify underlying soil conditions.

TABLE 3.2.2.B EQUIVALENCE BETWEEN SCS SOIL TYPES AND KCRTS SOIL TYPES

SCS Soil Type	SCS Hydrologic Soil Group	KCRTS Soil Group	Notes
Alderwood (AgB, AgC, AgD)	C	Till	
Arents, Alderwood Material (AmB, AmC)	C	Till	
Arents, Everett Material (An)	B	Outwash	1
Beausite (BeC, BeD, BeF)	C	Till	2
Bellingham (Bh)	D	Till	3
Briscot (Br)	D	Till	3
Buckley (Bu)	D	Till	4
Earlmont (Ea)	D	Till	3
Edgewick (Ed)	C	Till	3
Everett (EvB, EvC, EvD, EwC)	A/B	Outwash	1
Indianola (InC, InA, InD)	A	Outwash	1
Kitsap (KpB, KpC, KpD)	C	Till	
Klaus (KsC)	C	Outwash	1
Neilton (NeC)	A	Outwash	1
Newberg (Ng)	B	Till	3
Nooksack (Nk)	C	Till	3
Norma (No)	D	Till	3
Orcas (Or)	D	Wetland	
Oridia (Os)	D	Till	3
Ovall (OvC, OvD, OvF)	C	Till	2
Pilchuck (Pc)	C	Till	3
Puget (Pu)	D	Till	3
Puyallup (Py)	B	Till	3
Ragnar (RaC, RaD, RaC, RaE)	B	Outwash	1
Renton (Re)	D	Till	3
Salal (Sa)	C	Till	3
Sammamish (Sh)	D	Till	3
Seattle (Sk)	D	Wetland	
Shalcar (Sm)	D	Till	3
Si (Sn)	C	Till	3
Snohomish (So, Sr)	D	Till	3
Sultan (Su)	C	Till	3
Tukwila (Tu)	D	Till	3
Woodinville (Wo)	D	Till	3

Notes:

1. Where outwash soils are saturated or underlain at shallow depth (<5 feet) by glacial till, they should be treated as till soils.
2. These are bedrock soils, but calibration of HSPF by King County DNRP shows bedrock soils to have similar hydrologic response to till soils.
3. These are alluvial soils, some of which are underlain by glacial till or have a seasonally high water table. In the absence of detailed study, these soils should be treated as till soils.
4. Buckley soils are formed on the low-permeability Osceola mudflow. Hydrologic response is assumed to be similar to that of till soils.

DRAFT

KCRTS Land Cover Types

KCRTS supports four land cover types: forest, pasture, grass, and impervious. These cover types shall be applied in accordance with Core Requirement #3 and as specified in Table 3.2.2.C. Predevelopment land cover types are determined by whether the project is in a Basic or Conservation Flow Control Area and whether the area in question is a target surface, as defined in Section 1.2.3.1. Target surfaces within Basic Flow Control Areas and non-target surfaces are modeled as ***existing site conditions***; for target surfaces in Conservation Flow Control Areas the predeveloped condition is assumed to be ***historic site conditions***.

TABLE 3.2.2.C KCRTS COVER GROUPS AND AREAS OF APPLICATION

KCRTS Cover Group	APPLICATION	
	Predevelopment	**Post-Development**
Forest	All forest/shrub cover, irrespective of age.	All permanent (e.g., protected by covenant or CAO designation) onsite forest/shrub cover, irrespective of age, planted at densities sufficient to ensure 80%+ canopy cover within 5 years.
Pasture	All grassland, pasture land, lawns, and cultivated or cleared areas, except for lawns in redevelopment areas with predevelopment densities in excess of 4 DU/GA.	Unprotected forest in rural residential development shall be considered half pasture, half grass. Pasture areas to be retained on large rural residential lots (10 acres or greater) may be modeled as half pasture, half grass.
Grass	Lawns in redevelopment areas with predevelopment densities in excess of 4 DU/GA.	All post-development grassland and landscaping and all onsite forested land not protected by covenant or SASA designation (except in rural areas as noted above). Pervious areas that include underdrain collection systems (e.g., grass or synthetic turf sport fields) should be modeled as 75% grass and 25% effective impervious.
Wetland	All delineated wetland areas (except cultivated/drained farmland).	All delineated wetland areas (except cultivated/drained farmland).
Impervious(1)	All impervious surfaces, including heavily compacted gravel and dirt roads, parking areas, etc., and open water bodies (ponds and lakes).	All impervious surfaces, including compacted gravel and dirt roads, parking areas, etc., and open water bodies, including onsite detention and water quality ponds.(2)

(1) Impervious acreage used in KCRTS computations should be the **effective impervious area (EIA)**. This is the gross impervious area multiplied by the effective impervious fraction (see Table 3.2.2.E, p. 3-30). Non-effective impervious areas are considered the same as the surrounding pervious land cover.

(2) To avoid iterations in the facility sizing process, the "assumed size" of the facility need only be within 80% of the final facility size when modeling its contribution of runoff from direct rainfall.

DRAFT

The following four factors were considered in specifying the above land cover types to be used in hydrologic analysis with KCRTS:

- Cover types are applied to anticipate ultimate land use conditions. For example, probable clearing of woodland after development is nominally complete suggests that the post-development land use be specified as grassland (either pasture or grass) unless the forest cover is protected by covenant.
- In areas of redevelopment, there are often significant changes between the predevelopment and post-development efficiencies of the drainage system. For example, in conversion of low density residential areas to higher density land use, impervious areas prior to redevelopment may not be efficiently connected to a drainage system (e.g., downspouts draining to splash blocks, ditched instead of piped roadway systems). These problems are addressed by defining an "effective impervious fraction" for existing impervious areas and by generally requiring predevelopment grasslands to be modeled as pasture land.
- All onsite, predevelopment forest/shrub cover and all offsite forest/shrub cover is defined as "forest," irrespective of age. Post-development onsite land use is defined as forested only if forested areas are in a critical area buffer or are otherwise protected and will have a minimum 80% canopy cover within 5 years. In urban areas, unprotected onsite forest cover should be treated as grass in the post-development analysis. In rural areas, unprotected forest cover should be assumed 50% grass, 50% pasture.
- The HSPF grass parameters were developed by the USGS study of regional hydrology and have generally been interpreted as providing the hydrologic response for "urban" grasslands (lawns, etc.), which have relatively low infiltration rates and are drained effectively. The HSPF "pasture" parameters were developed by King County DNRP to provide a hydrologic response intermediate to the USGS forest and grass parameters, as might be typified by ungrazed or lightly grazed pasture with good grass cover. Because it is impossible to adequately control grassland management after development, all **post-development grassland should be modeled as "grass"** (with the exception of unprotected forest, and pasture areas on large lots, in rural development as noted above). All **predevelopment grassland should be modeled as "pasture"** except for redevelopment of areas with predevelopment land use densities of 4 DU/GA or greater (which are modeled as grass).

DRAFT

❑ CALCULATION OF IMPERVIOUS AREA

Total Impervious Coverage

Table 3.2.2.D (p. 3-29) lists percent impervious coverage for use in KCRTS analysis of **existing** residential areas. The tabulated figures are useful in offsite analysis that includes large developed residential areas, making a detailed survey of impervious coverage impractical.

Impervious coverage for **proposed** residential and commercial development must be estimated for each specific proposal. Impervious coverage of streets, sidewalks, hard surface trails, etc., shall be taken from layouts of the proposal. House/driveway or building coverage shall be as follows:

- For urban residential development, the assumed impervious coverage shall not be less than 4,000 square feet per lot or the maximum impervious coverage permitted by code (K.C.C. 21A.12.030), whichever is less.
- For rural residential development, the assumed impervious coverage shall not be less than 8,000 square feet per lot or the maximum impervious coverage permitted by code, whichever is less.
- For commercial or multi-family development, impervious coverage shall be estimated from layouts of the proposal.

Effective Impervious Area

The net hydrologic response of an impervious area depends on whether that area is effectively connected (usually by pipes or a channel) to a storm drainage system. The impervious area that the user inputs to

KCRTS is the "Effective Impervious Area" (EIA), the total impervious area multiplied by the **effective impervious fraction**. See Table 3.2.2.E, p. 3-30 for effective impervious fractions that apply to standard impervious surfaces. Table 1.2.3.C lists effective impervious factions for alternative materials and approaches.

Non-effective impervious area (i.e., total impervious area less EIA) is assumed to have the same hydrologic response as the immediately surrounding pervious area. For example, for existing residential areas with rooftops draining to splash pads on lawns or landscaping, the non-effective portion of the roof areas would be treated as pasture for predevelopment conditions (if DU/GA < 4.0) and grass for post-development conditions. *Note: Credits for infiltration/dispersion of downspouts on individual lots in proposed single family residential subdivisions are applied separately on a site-specific basis (see Note 3,* Table 3.2.2.E*).*

The effective impervious fraction can be selected from Table 3.2.2.E or determined from detailed ***site*** surveys. With the exception of figures for compacted gravel and dirt roads and parking lots, the figures in Table 3.2.2.E are average figures cited by the USGS (Dinicola, 1990).

TABLE 3.2.2.D PERCENT IMPERVIOUS COVERAGE FOR EXISTING RESIDENTIAL AREAS

Dwelling Units/Gross Acre	% Impervious[1]	Dwelling Units/Gross Acre	% Impervious
1.0 DU/GA	15[2]	4.5 DU/GA	46
1.5 DU/GA	20	5.0 DU/GA	48
2.0 DU/GA	25	5.5 DU/GA	50
2.5 DU/GA	30	6.0 DU/GA	52
3.0 DU/GA	34	6.5 DU/GA	54
3.5 DU/GA	38	7.0 DU/GA	56
4.0 DU/GA	42	7.5 DU/GA	58
For PUDs, condominiums, apartments, commercial businesses, and industrial areas, percent impervious coverage must be computed.			

Notes:

(1) Includes streets and sidewalks.

(2) These figures should be adjusted by the effective impervious fraction given in Table 3.2.2.E, if applicable. Values from Table 3.2.2.E may be interpolated as necessary.

DRAFT

TABLE 3.2.2.E EFFECTIVE IMPERVIOUS FRACTION[1]

Land Use	Predevelopment	Post-Development
Commercial, Industrial, or Roads with Collection System	0.95	1.00
Multi-Family or High Density Single Family[2] (>4 DU/GA)	0.80	1.00[3]
Medium Density Single Family[2] (4 DU/GA)	0.66	1.00[3]
Low Density Single Family[2] (1 DU/GA)	0.50	1.00[3]
Rural[2] (< 1 DU/GA)	0.40	1.00[3]
Gravel/Dirt Roads and Parking Lots, Roads without Collection System	0.50	0.50

Notes:

(1) The *effective impervious fraction* is the fraction of actual total impervious area connected to the drainage system. These figures should be used in the absence of detailed surveys or physical inspection (e.g., via pipe, channel, or short sheet flowpath).

(2) Figures for residential areas include roadways.

(3) Section 5.2 outlines where the use of Flow Control BMPs may be used to reduce the effective impervious area of the project

DRAFT

Example

Determining the KCRTS land use data for an existing 20-acre residential area, with an average lot size of 9600 square feet (4.5 DU/GA), surrounding a 5-acre forested open space tract would entail the following calculations:

From Table 3.2.2.D, the portion of basin assumed impervious at 4.5 DU/GA

Total Impervious = 0.46 x 20 acres = 9.2 acres
Existing Pervious (grass) = 20 acres - 9.2 acres = 10.8 acres
Existing Pervious (forest) = 5 acres

From Table 3.2.2.E, the effective impervious area

Effective Impervious Fraction = 0.8 (at 4.5 DU/GA)
Effective Impervious Area = 0.8 x 9.2 acres = 7.36 acres
Non-Effective Impervious Area = 9.2 acres - 7.36 acres = 1.84 acres

Add the non-effective impervious area to the area of the surrounding pervious land cover.

Total Grass Area = 10.8 acres + 1.84 acres = 12.64 acres
Total Forest Area = 5 acres
Effective Impervious Area = 7.36 acres

These are the acreages that would be input into the KCRTS model when creating the time series.

3.2.2.2 TIME SERIES STATISTICAL ANALYSIS

When using KCRTS to size flow control, water quality, and conveyance facilities, design flows and durations must be determined through statistical analysis of time series data generated by KCRTS. KCRTS provides for statistical analysis of both **flow frequency** and **flow duration** as described in this section. *Flow frequency analysis* is used for determining design peak flows while *flow duration analysis* is used for determining durations of flow exceedance.

❑ FLOW FREQUENCY ANALYSIS

Flow frequency is a commonly used but often misunderstood concept. The *frequency of a given flow* is the average return interval for flows equal to or greater than the given flow. The *flow frequency* is actually the inverse of the probability that the flow will be equaled or exceeded in any given year (the *exceedance probability*). For example, if the exceedance probability is 0.01, or 1 in 100, that flow is referred to as the 100-year flow. Assuming no underlying changes in local climate, one would expect to see about 10 peak annual flows equal to or greater than the 100-year flow in a 1,000-year period. Similarly, the 2-year flow is the flow with a probability of 0.5, or 1 in 2, of being equaled or exceeded in any given year. In a 100-year period, one would expect to observe 50 peak annual flows greater than or equal to the 2-year flow. The number of peak annual flows actually equal to the 2-year flow may be zero, since peak annual flows come from a continuous spectrum.

There are many **methods for estimating exceedance probabilities** and therefore flow frequencies. The *USGS Bulletin 17B* methods are commonly used, as are graphical methods using the Gringorten, Cunane, or Weibull plotting schemes (Maidment, 1993). Graphical methods for flow frequency estimation involve assigning exceedance probabilities, and therefore return intervals, to each annual peak in a series of annual peak observations, and then plotting the peak flows against their assigned return periods. This plot is known as a *flow-frequency curve*, and it is a very useful tool for analyzing flood probabilities. Examples of flow-frequency curves for a small basin under various conditions are shown in Figure 3.2.2.B (p. 3-32).

Flow-frequency curves are used in continuous flow simulations to determine the effect of land use change and assess the effectiveness of detention facilities. Using continuous methodology to design detention facilities to control peak flows, the analyst must match the post-development (detained) and predevelopment flow-frequency curves at the frequencies of interest, as shown in Figure 3.2.2.B (p. 3-32), rather than match specific design events as when using an event model. KCRTS provides flow-frequency estimates and graphs flow-frequency curves from time series of either flow rates or water levels.

DRAFT

FIGURE 3.2.2.B EXAMPLE FLOW FREQUENCY ANALYSIS

Undetained Developed

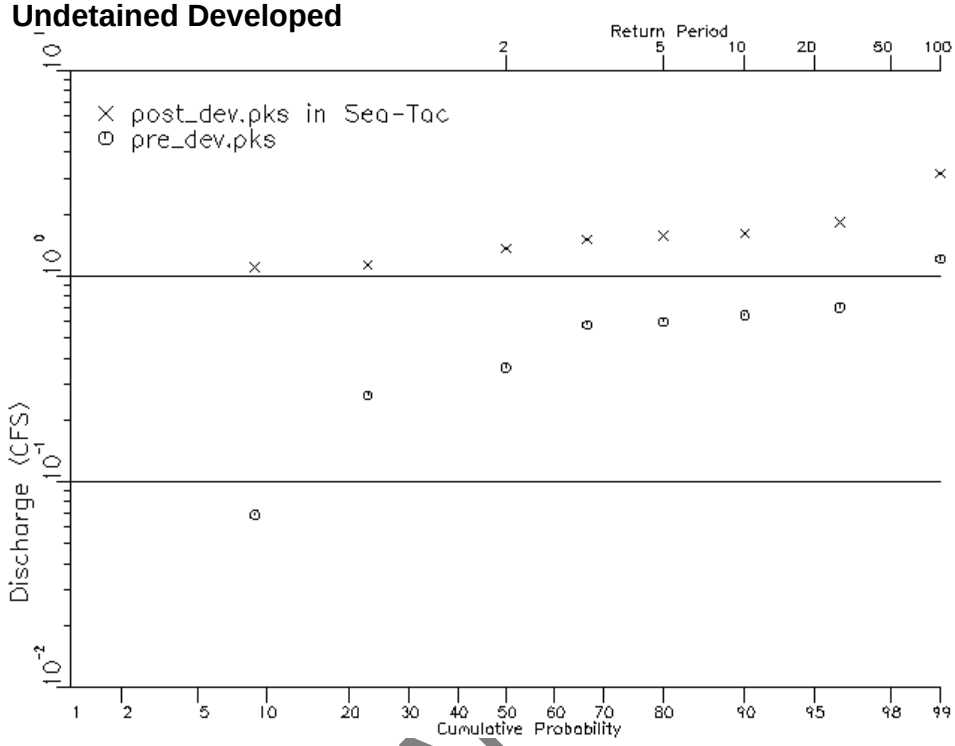

Detained Developed

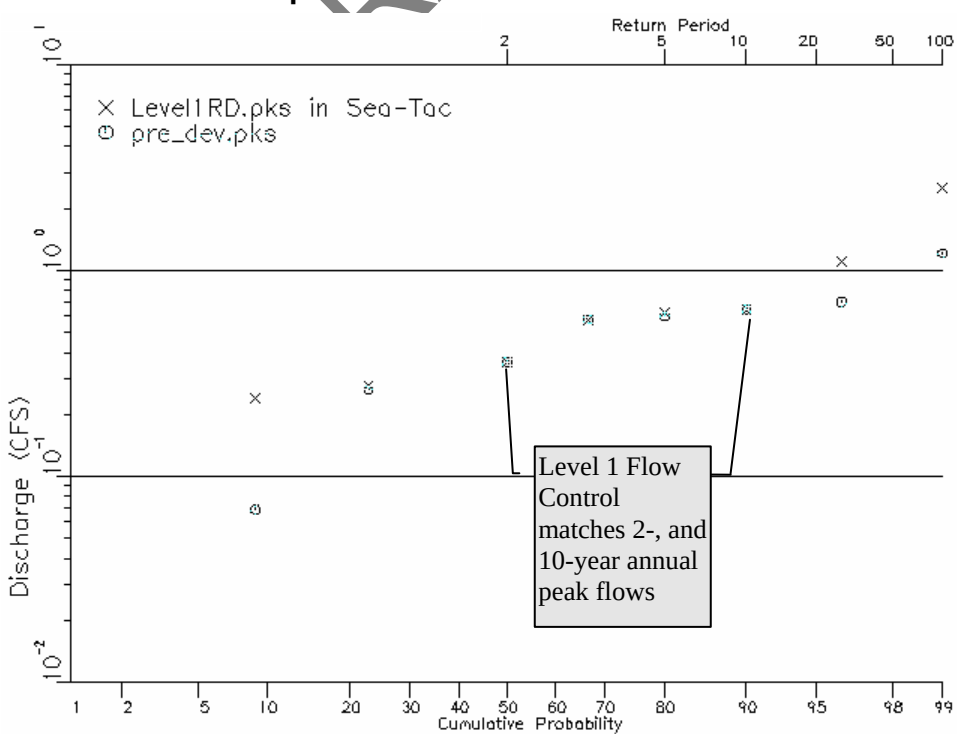

Flow frequency information is derived from the time series flow file by plotting the peak annual events in the runoff file and calculating runoff frequencies using a Log Pearson distribution. The **return periods calculated in KCRTS** are: 100-year, 25-year, 10-year, 5-year, 3-year, 2-year, 1.3-year and 1.1-year. The 50-year return event is an interpolated value using the 25-year and 100-year return events

❑ FLOW DURATION ANALYSIS

Flow durations are important because they show the change in duration of all high flows rather than the change in frequency of the peak annual flows. Channel scour and bank erosion rates rise proportionally with increases in flow durations. Flow duration analysis can only be conducted with continuous flow models or from gage records.

A *flow duration curve* is simply a plot of flow rate against the percentage of time that the flow rate is exceeded. In a continuous flow model, the *percent exceedance* of a given flow is determined by counting the number of time steps during which that flow is equaled or exceeded and dividing that number by the total number of time steps in the simulation period. Flow duration curves are usually plotted with a linear flow scale versus a log scale of percent exceedance. The log scale for exceedance percentage is used because geomorphically significant flows (flows capable of moving sediment) and flows that exceed the 2-year flow typically occur less than one percent of the total time.

Durations for Flow Control Standards

The **Level 2 flow control standard** described in Section 3.1.2 (p. 3-5) requires matching predevelopment and post-development flow duration curves for all flows greater than one-half of the 2-year flow up to the 50-year flow.

KCRTS provides flow duration curves for either flows or water levels. To support facility design, KCRTS will create a *"target" predevelopment duration curve* for the range of flows being analyzed. To simplify design, **brief excursions**[1] above the target predevelopment duration curve are allowed for flows greater than 50 percent of the predevelopment 2-year. These excursions shall not increase the discharge by more than 10% at any duration level and must be strictly below the target curve at the low end of the range of control from ~~(i.e.,~~ 50% of the 2-year peak flow to the 2-year peak flow~~)~~. This allows efficient design using only two orifices for most applications; see the *KCRTS Computer Software Reference Manual* for a detailed example. An example of a flow duration analysis is shown in Figure 3.2.2.C (p. 3-34).

The **Level 3 flow control standard** matches predevelopment and post-development flow durations over the same range of predevelopment flows as the Level 2 flow control standard. In addition, the 100-year post-development peak flow must be contained within the facility and controlled to predevelopment levels. This standard provides additional storage volume over the Level 2 flow control facility, which substantially mitigates the impacts of increased volumes of surface runoff on downstream, volume-sensitive flooding problems.

The **Level 1 flow control standard** does not require flow duration analysis because it addresses peak flows only.

DRAFT

[1] Brief excursions may not result in more than 50% of the target duration curve being exceeded.

FIGURE 3.2.2.C EXAMPLE FLOW DURATION ANALYSIS

Undetained Developed

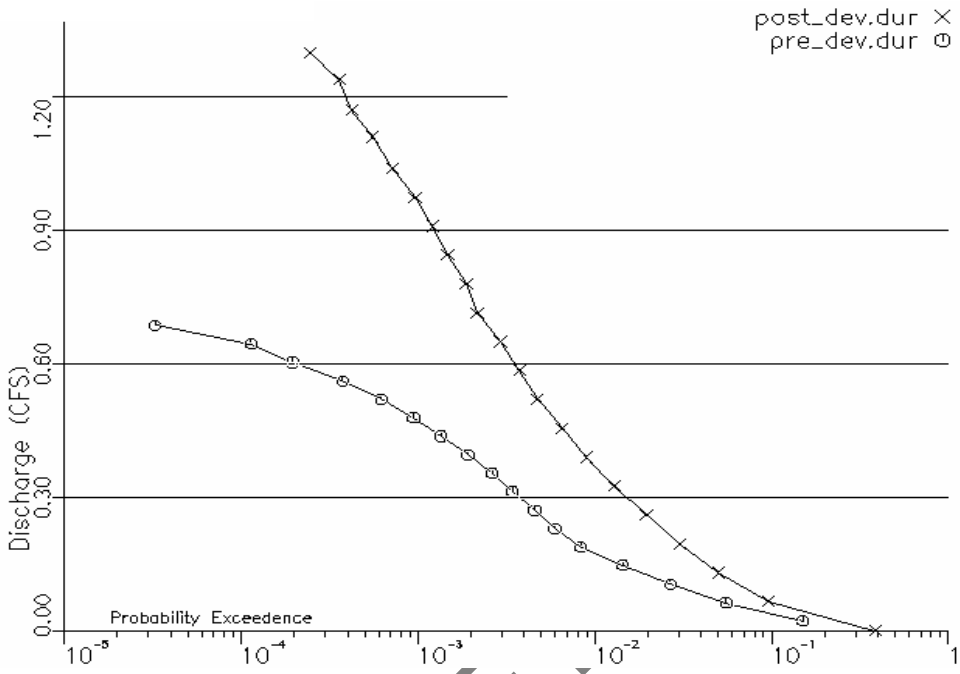

Detained Developed

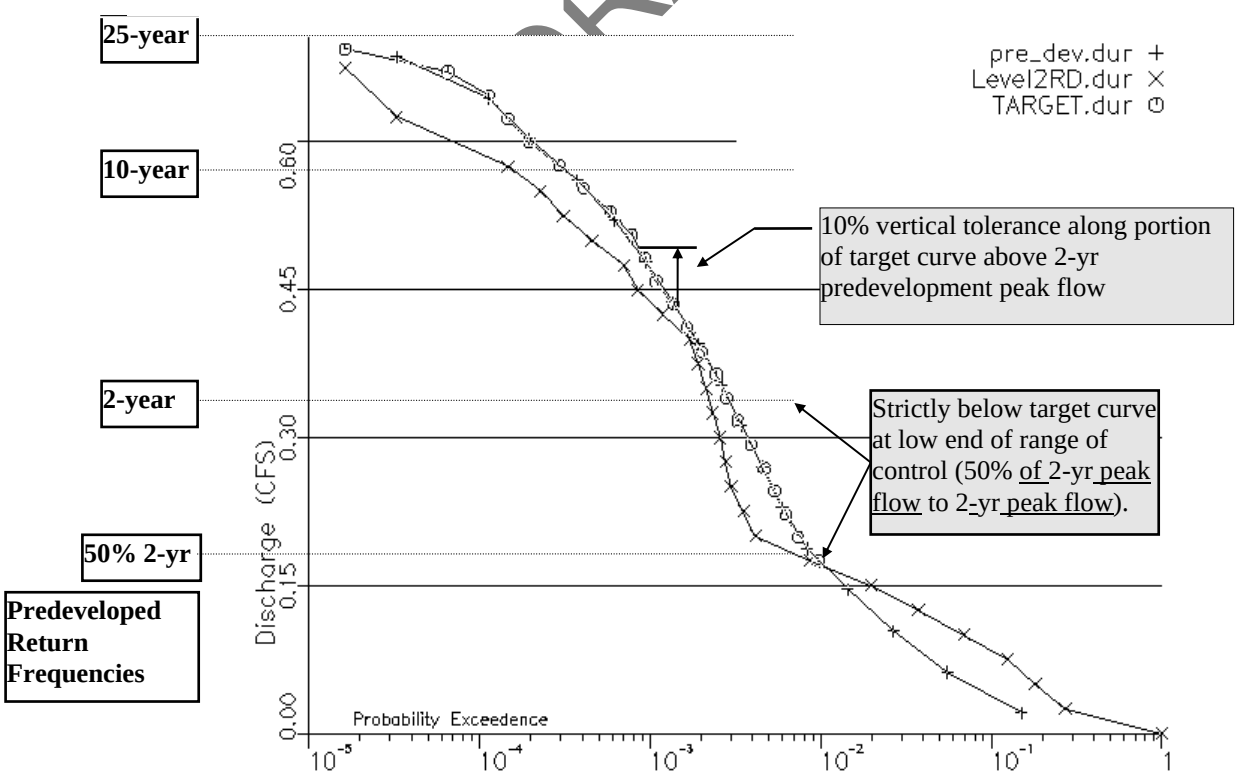

3.2.3 HSPF MODEL

HSPF is the parent model from which the KCRTS Runoff Files method is built. It is a very versatile continuous hydrologic/hydraulic model that allows for a complete range of hydrologic analysis. This model has been extensively used in King, Snohomish, and Thurston counties and found to be an accurate tool for representing hydrologic conditions in this area. The USGS has developed **regional parameters** to describe the common soil/cover combinations found in this area. In many cases, these regional parameters can be used to represent rainfall/runoff relationships in lieu of ***site***-specific calibration parameters.

Unfortunately, the HSPF model is very difficult to use. Design engineers using HSPF should study this model in detail and obtain training before using it on a project. For these reasons, the HSPF model is recommended only for large and complex projects where the capabilities of KCRTS are too limited.

The strengths of HSPF relative to KCRTS are as follows:

1. HSPF can be calibrated to local conditions.
2. HSPF can model, link, and route many separate subbasins.
3. HSPF includes the groundwater component of streamflow.
4. HSPF can address groundwater connections and perform low-flow analysis.
5. HSPF can handle more complex hydrologic routing (e.g., evaporation, seasonal infiltration, etc.).

The HSPF model is generally recommended for large ***sites*** *where these additional features are required for comprehensive hydrologic and/or hydraulic analysis.* Anyone planning a project that is large enough to require Large Project Drainage Review and submittal of a Master Drainage Plan (MDP) per Section 1.1.2.4 should meet with DDES MDP review staff regarding appropriate hydrologic analysis prior to initiating such analysis. If a project subject to Large Project Drainage Review drains to a wetland, a salmonid stream with low-flow sensitivities, or a ***critical aquifer recharge area***, it is likely that the County will require a calibrated HSPF model. If such a project drains to erosion-sensitive streams or has features with complex hydraulics, the County may recommend or require an HSPF model using the USGS regional parameters. Smaller or less sensitive subbasins within a MDP area can be analyzed with KCRTS.

DRAFT

Additional data is required to develop an HSPF model. At a minimum, development of an HSPF model requires collection of onsite rainfall data for a period from seven to twelve months. This data is used to determine which regional long-term rainfall record is most appropriate for modeling the ***site*** and for determining transposition factors for the long-term records. If calibration is required, the onsite rainfall data is used. Calibration also requires the installation of flow gages and the collection of flow data against which simulated flows can be compared. HSPF analysis is based on simulations with long-term rainfall records (greater than 30 years). Long-term precipitation records in HSPF format can be obtained from the County for the Sea-Tac, Landsburg, and Carnation gages.

Land surface representation with HSPF follows the same procedures and classification as used with KCRTS.

Conceptually, the outputs required from an HSPF analysis are consistent with those required from a KCRTS analysis, including frequency and durational analysis. Flow and/or water level frequencies shall be estimated using the full set of annual peaks from the long-term simulations using the *USGS Bulletin 17B* methods as well as the Gringorten or Cunane graphical methods. Durational analyses can be produced from the HSPF model and the results presented graphically. If a wetland is modeled, water level analyses may be required. Monthly, seasonal, and annual water balance and flow information, if appropriate, can be calculated with the HSPF model.

3.2.4 STORAGE ROUTING/WATER LEVEL ANALYSIS METHODS

This section presents the methods used for sizing and analyzing detention storage and determining water levels for ponding water bodies. It begins with an introduction to the *level pool routing technique* (the basic method of storage routing used in King County) and then describes how this technique is used by KCRTS for storage routing of runoff time series and assessment of water levels.

❑ INTRODUCTION TO LEVEL POOL ROUTING

The level pool routing technique is one of the simplest and most commonly used routing methods. It is described in the *Handbook of Applied Hydrology* (Chow, Ven Te, 1964) and elsewhere, and it is based on the continuity equation:

Inflow - Outflow = Change in storage

$$\left[\left(\frac{I_1 + I_2}{2}\right) - \left(\frac{O_1 + O_2}{2}\right)\right] = \frac{\Delta S}{\Delta t} = S_2 - S_1 \qquad (3\text{-}7)$$

where I = inflow at time 1 and time 2
O = outflow at time 1 and time 2
S = storage at time 1 and time 2
Δt = time interval, t_2 - t_1

The time interval, Δt, must be consistent with the time interval of the inflow hydrograph or time series. As indicated in Section 3.2.2, the time interval used for sizing and analyzing flow control facilities can be either 15 minutes or 60 minutes as specified in Table 3.2.2.A (p. 3-24). The Δt variable can be eliminated by dividing it into the storage variables to obtain the following rearranged equation:

$$I_1 + I_2 + 2S_1 - O_1 = O_2 + 2S_2 \qquad (3\text{-}8)$$

DRAFT

If the time interval, Δt, is in minutes, the units of storage S are now [cf/min] which can be approximated to cfs by multiplying by 1 min/60 sec.

The terms on the left-hand side of the equation are known from the inflow time series and from the storage and outflow values of the previous time step. The unknowns O_2 and S_2 can be solved using the stage-storage and stage-discharge relationships for the storage facility being analyzed or sized. The level pool routing procedure calls for this calculation to be made for each time step of the inflow time series in order to generate the outflow time series for the facility. Because of the repetitive nature of this procedure, it is best performed using a computer.

The KCRTS program includes a routine, described later in this section, for executing the level pool routing procedure. Level pool routing using KCRTS requires that the stage-storage and stage-discharge relationships be determined as explained below.

Developing the Stage-Storage Relationship

The following methods and equations are used for determining the stage-storage relationships of various facility types:

Facilities with Vertical Sides

For vertical-sided facilities such as vaults, the stored volume is simply the bottom area times the height.

Ponds with 3:1 Side Slopes

For ponds with 3:1 side slopes, the stored volume can be approximated by averaging the pond surface area with the bottom area. The following equation was derived based on this assumption and for a square pond but provides a reasonable trial estimation for typical ponds of other shapes.

$$S(H) = 12\,H^3 + 6\sqrt{A_b}\,H^2 + A_b H \qquad (3\text{-}9)$$

where H = stage height (ft) or water depth above pond bottom
A_b = area of pond bottom (sf)
$S(H)$ = storage (cf) at stage height H

Note: Actual pond volumes and surface areas should be computed based on the methods outlined in Reference Section 6-B, or the following equation:

$$V = \frac{h}{3}\left(A_t + A_b + \sqrt{A_t A_b}\right) \qquad (3\text{-}10)$$

where h = *depth*
A_t = *area of top*
A_b = *area of the bottom*

DRAFT

Irregularly Shaped Storage Areas

The stage-storage relationship for irregularly shaped storage areas may be developed as follows:

1. Obtain topographic contours of an existing or proposed storage facility location and determine (with a planimeter or otherwise) the area enclosed by each contour. For example, in Figure 3.2.4.A (p. 3-38) each contour represents a one-foot interval. Contour 71 is the lowest portion of the facility location and represents zero storage. Contour 76 represents a potential stage of 5 feet above the bottom the facility.
2. Calculate the average end area within each set of contours. For the example in Figure 3.2.4.A, the average end area between contours 71 and 72 would be:

$$\frac{600 + 4400}{2} = 2500 \text{ sf}$$

3. Calculate the volume between each set of contours by multiplying the average end area within each set of contours by the difference in elevation. To illustrate, the volume between contours 71 and 72 would be:

$$(2500 \text{ sf})(1 \text{ ft}) = 2500 \text{ cf}$$

Similarly,

Area 72-73 = 6550 cf
Area 73-74 = 10,050 cf
Area 74-75 = 12,950 cf
Area 75-76 = 16,750 cf

4. Define the total storage below each contour. This is just the sum of the volumes computed in the previous step up to the contour in question. For example, there is no storage below contour 71, 2500 cf below contour 72, and (6550 + 2500) = 9050 cf below contour 73.

In summary,

Contours	Stage	Sum of Volumes	Total Volume
Contours 71-72	1	0 + 2500	= 2500 cf
Contours 72-73	2	2500+ 6500	= 9050 cf
Contours 73-74	3	9050+ 10,050	= 19,100 cf
Contours 74-75	4	19,100 + 12,950	= 32,050 cf
Contours 75-76	5	32,050 + 16,750	= 48,800 cf

Figure 3.2.4.B below is a plot of the stage-storage relationship for this example.

FIGURE 3.2.4.A STORAGE AREA CONTOURS AT ONE-FOOT INTERVALS

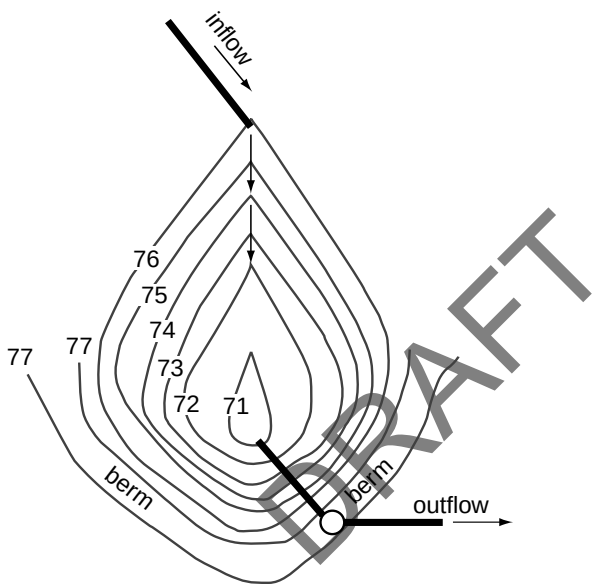

Area within each contour	
71	600 sq. ft.
72	4400 sq. ft.
73	8700 sq. ft.
74	11,400 sq. ft.
75	14,500 sq. ft.
76	19,000 sq. ft.

FIGURE 3.2.4.B STAGE-STORAGE RELATIONSHIP

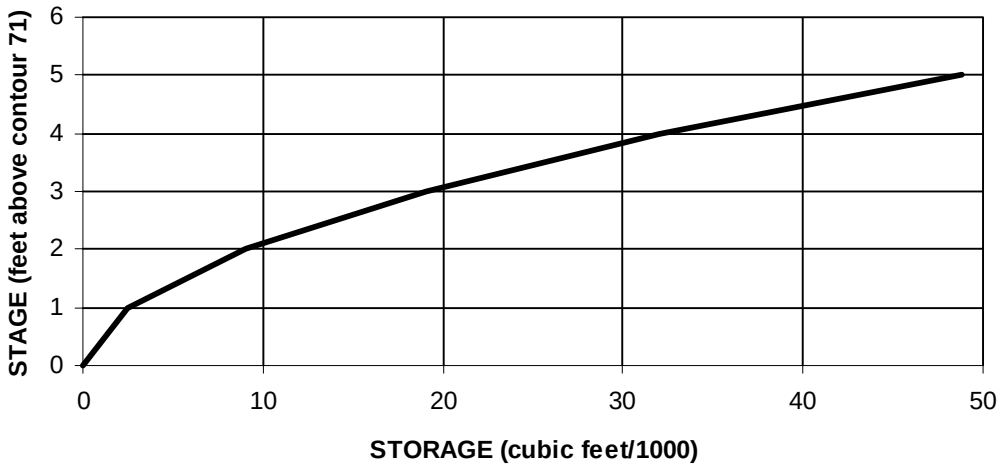

Developing the Stage-Discharge Relationship

The stage-discharge relationship is determined by computing the peak discharge rate for each stage height used in the stage-storage relationship. Peak discharge rates are computed using the appropriate flow equation(s) or headwater data corresponding to the type of outlet present or proposed.

❑ LEVEL POOL ROUTING USING KCRTS

KCRTS supports level pool routing of time series as described in the preceding pages. To analyze an existing storage facility, the stage-storage and stage-discharge relationships are defined as explained above and input into KCRTS as "routing data." When sizing a new facility, KCRTS will automatically define these relationships. In addition to surface discharges, the user may define a stage variable permeable area and a constant infiltration rate for a storage feature. Infiltrated runoff is not saved to an outflow time series. Infiltration rates for most soils in King County under saturated conditions are slow, and permeable areas and infiltration rates are usually set to zero for simplicity. See Section 5.4 for considerations on the use of infiltration.

Routing is performed with the **Route-1 Outlet (single discharge), Route-2 Outlet (dual discharge-"flow splitter"), and Facility routines of KCRTS** as described in the program documentation. Whenever a time series is routed through a storage feature, KCRTS automatically generates an outflow time series containing both flow and stage records. In addition to normal applications as a flow time series, the time series can be analyzed for water levels in the storage feature.

DRAFT

❑ ASSESSING WATER LEVEL STATISTICS WITH KCRTS

KCRTS allows analysis of time series for water level statistics in the same manner as with flow statistics. Using the outflow time series, KCRTS can plot stages over a one-month time period, estimate return frequencies for various stages, plot a **stage-frequency curve**, and conduct **stage duration analysis**. The only water level analysis specifically required by this manual is **stage frequency analysis**. Other water level analysis capabilities are supported by KCRTS, but are not required anywhere in this manual.

Stage frequency analysis consists of estimating and plotting recurrence estimates for water levels within a storage feature in the same manner as flow frequency analysis is conducted for discharges. Stage frequency analysis is required for assessing runoff impacts to offsite closed depressions and ponding areas as required under Core Requirements 2 and 3, and as discussed Section 3.3.6, "Point of Compliance Analysis" (p. 3-51).

❑ ASSESSING ANNUAL AVERAGE RUNOFF VOLUMES WITH KCRTS

The Compute Volume routine, in the KCRTS Analysis Tools menu, can be used to compute the volume of runoff (surface + interflow) of a time series. For the reduced runoff files, the analysis is performed over the first 7 years (10/01/00 - 09/30/07); for the historical runoff files, the entire period of record is used. The total volume is divided by the number of full water years being analyzed to determine the annual average runoff volume.

DRAFT

3.3 HYDROLOGIC DESIGN PROCEDURES AND CONSIDERATIONS

This section presents the design procedures and considerations for sizing flow control facilities to meet the required hydrologic performance specified in Core Requirement #3, Section 1.2.3. It includes the following procedures and special considerations for proper hydrologic design:

- "General Hydrologic Design Process," Section 3.3.1
- "Flow Control Design with KCRTS," Section 3.3.2 (p. 3-43)
- "Conveyance System Design with KCRTS," Section 3.3.3 (p. 3-46)
- "Safety Factors in Hydrologic Design," Section 3.3.4 (p. 3-47)
- "Design Options for Addressing Downstream Problems," Section 3.3.5 (p. 3-48)
- "Point of Compliance Analysis," Section 3.3.6 (p. 3-51)
- "Onsite Closed Depressions and Ponding Areas," Section 3.3.7 (p. 3-54).

3.3.1 GENERAL HYDROLOGIC DESIGN PROCESS

DRAFT

This section presents the general process involved in conducting a hydrologic analysis using the runoff computation and analysis methods in Section 3.2 to design flow control facilities for a project. The process is described as follows:

1. Review the **core and special requirements** in Chapter 1 to determine all requirements that will apply to the proposed project.
   a) Determine the applicable flow control standard (outflow performance criteria and land cover assumptions).
   b) If downstream problems are identified through offsite analysis per Core Requirement #2, determine if they will necessitate additional onsite flow control or other measures as described in Section 3.3.5 (p. 3-48).
2. Determine and demonstrate in the Technical Information Report (see Section 2.3) the **predeveloped conditions** per Core Requirement #3, Flow Control (see Section 1.2.3).
3. Identify and delineate the drainage basin for each ***natural discharge location*** from the ***project site***.
   a) Identify **existing drainage features** such as streams, conveyance systems, detention facilities, ponding areas, depressions, wetlands, etc.
   b) Identify existing land uses.
   c) Identify soil types using SCS soil survey or onsite evaluation.
   d) Convert SCS soil types to KCRTS soil classifications.
4. Select and delineate **appropriate subbasins**, including subbasins tributary to major drainage features and important conveyance points, and subbasins for separate computation of onsite flows and offsite flows.
5. Determine **hydrologic parameters** for each subbasin under ~~existing~~predeveloped conditions.
   a) Determine appropriate rainfall region and regional scale factor.
   b) Categorize soil types and land cover per Table 3.2.2.B (p. 3-26) and Table 3.2.2.C (p. 3-27).
   c) Determine total impervious areas and effective impervious areas within each subbasin.
   d) Determine areas for each soil/cover type in each subbasin.

6. Determine the **runoff time series** for predeveloped conditions at each ***natural discharge location***.
   a) Compute the predeveloped condition runoff time series for each subbasin using hourly time steps.
   b) **For subbasins that drain to a drainage feature with significant detention storage** (e.g., existing detention facilities, ponding areas, closed depressions), route the runoff time series through the feature per the storage routing methods in Section 3.2.4 (p. 3-36). This will yield an attenuated flow series, which becomes the effective runoff time series for that subbasin.
   c) Sum the appropriate subbasin runoff time series to obtain the total runoff time series for each ***natural discharge location***.
   d) Determine the 100-year peak flow for each ***natural discharge location***.
7. Repeat Steps 4 through 6 for the proposed post-development condition.
8. Compare the **100-year peak flows** for the appropriate predeveloped and post-development conditions at each ***natural discharge location***.
   a) Check the "**Discharge Requirements**" criteria in Core Requirement #1 to determine the acceptable manner of discharge from the ***project site*** (using **existing conditions**).
   b) Check the **flow control exemptions** in Core Requirement #3 to determine if a flow control facility is required (using ***existing site*** or ***historic site conditions***, as specified in Core Requirement #3).
   c) Check the requirement for ~~**offsite**~~ **bypass of runoff from non-target surfaces** in Core Requirement #3 to determine if ~~offsite flows entering the ***project site***~~runoff from non-target surfaces must be conveyed around onsite flow control facilities (using **existing conditions**).
9. If flow control facilities are required, determine their location and make any necessary adjustments to the developed condition subbasins.
10. **Design and size each flow control facility** using the methods described in Section 3.2 and the KCRTS design procedure in Section 3.3.2.
    a) Analyze the appropriate predeveloped condition runoff time series to determine target release rates for the proposed facility. *Note: If the target release rates are zero, an infiltration facility will be required.*
    b) Compute the post-development runoff time series for the proposed facility.
    c) Use the post-development runoff time series and an iterative process to size the facility to meet the required level of performance set forth in Core Requirement #3. See the *KCRTS User's Guide* for procedures in sizing flow control facilities using continuous flow series.
11. **Design required onsite conveyance systems** using the appropriate runoff computation method (either the Rational method or KCRTS/Runoff Files method with 15-minute time steps) as specified in Section 3.2 (p. 3-9).

DRAFT

3.3.2 FLOW CONTROL DESIGN WITH KCRTS

Flow control facility design using the KCRTS *Size a R/D Facility* routine involves four basic steps:

1. Determining the statistical characteristics (peaks or durations) of predevelopment hourly flows which set the targets for the facility release rates,
2. Developing preliminary facility volume and orifice configuration using the Test Inflow Hydrograph List,
3. Routing post-development flow time series through the preliminary facility to check performance, and
4. Iteratively revising the facility and checking performance until the target flow conditions are achieved.

Instead of using individual design rainfall events as in an event model, the design of the facility is based on simulation of the facility's performance using the 8-year time series record of simulated post-development flows, and on comparison of the outflow record to characteristics of the predevelopment flow record. The design engineer uses several month-long test hydrographs for preliminary facility sizing and orifice adjustment, but final design is not achieved until the full 8-year outflow time series meets the target flow specifications.

Detention facility design with a continuous model is based on aggregate flow statistics, not upon individual storms. *When designing detention facilities with a continuous model like KCRTS, the return period of the peak flow leaving the facility for a particular event may not have the same return period as the peak flow entering the facility during the same event.* Unlike event models, continuous models have natural variability in the ratio of storm peak and volume. This lack of correspondence in the return periods of peak inflows and outflows in continuous models means that facility design using KCRTS is more complicated than with an event method and in general has to be done on an iterative trial-and-error basis to obtain an optimal (i.e., least volume) design.

DRAFT

The effect of detention facilities in controlling peak flows is dependent on both the volume and peak of the inflowing hydrograph. *Generally, it is high volume storms rather than high intensity storms that cause detention facilities to fill and overtop.* KCRTS-produced hydrographs, based on historical rainfall data, show considerable variability in the relationships between peak flows and storm volumes. For example, one event produced by high rainfall intensities in a relatively short duration storm may produce high peak flows with a relatively small hydrograph volume. By contrast, a second rainfall event may have relatively low intensities but long duration, producing a runoff hydrograph with large volumes and relatively small peak. Due to this natural variability, the peak annual outflows from a detention facility may not correspond in time to the annual peaks of the inflow record.

Similarly, the predevelopment peak annual flows may not occur during the same storm as the peak annual flows for the post-development flow series. This is because the types of storms that produce high flows from undeveloped land covers are different from those that produce high flows from impervious surfaces. Forests generate high streamflows in response to long-duration, high-volume rainfall events that soak the soil profile, whereas impervious surfaces produce the highest flow rates in response to high precipitation intensity. This is another reason why detention facility design with a continuous flow model is based on aggregate flow statistics, not upon individual storm hydrographs.

The following is a recommended procedure for hydrologic design of detention/infiltration facilities using KCRTS. Specific guidance for conducting hydrologic analysis and design with KCRTS is provided in the *KCRTS Computer Software Reference Manual*.

1. **Create time series** of flows from the predevelopment area using predevelopment land cover, the post-development area tributary to the facility, any onsite post-development bypass area, and any offsite flow-through areas.
2. **Add any offsite flow-through time series** to the predevelopment flow time series to produce a time series of total predevelopment outflows from the ***project site***. Similarly, add the same offsite flow-

through time series to the time series of post-development flows tributary to the facility to produce a time series of total post-development inflows to the facility.

3. Generate **peak annual flow estimates** and **flow frequency curves** for pre- and post-development time series. If applicable, generate flow duration curves for predevelopment time series.

4. Enter the **Size a Facility routine** in KCRTS and specify initial facility specifications for the type of facility proposed. Use of two orifices is usually sufficient for most designs. If designing an infiltration facility, the bottom orifice may be elevated or zero orifices may be specified. Set the Test Inflow Hydrograph list using the post-development inflow time series.

5. Specify the **Primary Design Hydrograph (PDH).** The event specified as the PDH must have a target release rate specified. *Usually, control of only one test hydrograph in addition to the PDH is necessary for either flow frequency or flow duration control.* These test hydrographs are used as design storms to develop a preliminary facility design and simplify the revision process. The hydrographs and flow targets listed in Table 3.3.2.A below are suggested for preliminary pond and orifice sizing.

TABLE 3.3.2.A
HYDROGRAPHS AND FLOW TARGETS FOR PRELIMINARY POND & ORIFICE SIZING

	Flow Frequency Control		Flow Duration Control	
	Outflow Recurrence Interval	Target Pre-Development Flow Rate	Outflow Recurrence Interval	Target Pre-Development Flow Rate
Primary Design Hydrograph	10-year	10-year	50-year[1]	50-year[1]
Test Hydrograph Rank	3	--	2	
Additional Test Hydrograph	2-year	2-year	2-year	one-half the 2-year
Test Hydrograph Rank	6[2]	--	6[2]	

[1] With the reduced (8-year) runoff files, use the largest time step of the first seven water years.

[2] With the full historic runoff files, test hydrograph #7 is the event closest to a 2-year return period.

DRAFT

The initial **Test Inflow Hydrograph** list setup will include the storm events generating the highest annual peaks from the inflow time series. The final design is accomplished by controlling the events generating the annual peak flows from the outflow time series. It is recommended that the automatic **Event Date Notification/Update option** be used, which will notify the user of needed updates to the hydrograph event dates when the full time series is routed; see the *KCRTS Computer Software Reference Manual* for further information.

6. **Iterate the PDH** and save the designed facility.

7. Set up the **Auto-Analysis options** to execute the analysis tools needed to assess facility performance. To evaluate flow frequencies for application of the Level 1 flow control standard, the Compute Peaks and the Event Date Notification options should be turned on.

8. **Route** the complete pond inflow time series through the facility. The outflow time series is automatically saved and the analysis tools performed. Frequent routing of the full time series is necessary while adjusting the facility in order to keep the hydrograph list consistent with the events generating the highest outflows. *Note: In KCRTS version 4.0 and later, this process has been automated when using the Automatic Iteration function.*

9. **Adjust orifice configuration and iterate the PDH until desired performance is achieved.** The calculated outflow peaks for the test hydrograph list should remain in descending order. Repeat Step 8 if the relative rank of the test hydrographs changes.

10. **Verify the pond performance** by routing the complete time series of inflows and checking the post-development peak flows and/or durations at the ***project site*** boundary against the target flows and/or durations (see the criteria for "Evaluating Flow Control Performance" provided below). Update the test inflow hydrograph dates as needed to keep the test hydrographs event dates current with the annual peaks of the post-development time series at the ***project site*** boundary. Repeat Steps 8-10 as necessary to achieve the desired performance and to produce an optimal design.

Evaluating Flow Control Performance

Evaluating the performance of facility designs intended to provide **flow frequency control** is comparatively straightforward: the post-development facility annual peak flows should be strictly less than or equal to predevelopment annual peak flows at each of the specified return periods.

Evaluating the design performance of detention facilities providing **flow duration control**, however, generally requires several iterations. In fact, considerable time could be spent attempting to match predevelopment and post-development duration curves. Some flexibility in assessing the adequacy of fit is clearly needed to expedite both design and review. Therefore, flow duration designs will be accepted as meeting performance standards when the following conditions are met:

1. The post-development **flow duration curve** lies strictly on or below the predevelopment curve at the **lower limit of the range of control** (between 50% of the 2-year and the 2-year).[2]

2. **At any duration within the range of control**, the post-development flow is less than 1.1 times the predevelopment flow.

3. The **target duration curve** may not be exceeded along more than 50% of the range of control.

4. The **peak flow at the upper end of the range of control** (reduced, 25-year; historical, 50-year) may not exceed predeveloped levels by more than 10%.

DRAFT

[2] For small projects, the lower limit of the range of control is considered met with a minimum diameter (0.5 inches) lower orifice in a low head facility (maximum effective storage depth of 3 feet) where full duration control cannot be achieved at the lower limit. Predeveloped flow durations, within allowed tolerances, must be met for all flows above the best achievable lower limit.

3.3.3 CONVEYANCE SYSTEM DESIGN WITH KCRTS

This section provides guidance for use of the KCRTS/Runoff Files method in determining peak flows for the design and analysis of conveyance elements, overflow structures, and other peak flow sensitive drainage features. KCRTS should not be used to determine peak flows for areas less than 10 acres in size unless there are significant storage features (see Section 3.2).

Rainfall events that create the highest rates of runoff from developed areas are typically shorter in duration and are characterized by brief periods of high intensity rainfall. To simulate the runoff from higher intensity, shorter duration rainfall events, **a 15-minute time series is used** and **flowpath adjustments** are made to the time series to account for the specific hydrologic response of the catchment.

To make flowpath adjustments to a time series, the user specifies the length and slope of the longest unconcentrated drainage pathway for the impervious and grass land cover types. Runoff is unconcentrated until collected into a drainage facility such as an open channel, catch basin, pond, depression, etc. Drainage pathways are measured from the farthest point in the catchment to the collection point and are aligned perpendicular to topographic contours.

The flowpath adjustments of 15-minute time series are accomplished by accessing a different set of runoff files containing the rainfall excess values for the impervious and grass land cover types. The *rainfall excess* is the portion of the total rainfall that is available as surface runoff but has not been routed across the landscape to the collection point of the drainage system. KCRTS utilizes standard routing equations to perform the surface routing along the user-defined flowpath.

The following is a recommended **procedure for hydrologic design and analysis of conveyance facilities using KCRTS:**

1. Select and delineate **appropriate subbasins**.
   a) Select separate subbasins for major drainage features and important conveyance points.
   b) Identify existing land covers offsite and post-development land covers onsite.
   c) Identify soil types by using the SCS soil survey or by directly evaluating the ***site***.
   d) Convert SCS soil types to KCRTS soil classifications.
2. Determine **hydrologic parameters** for each subbasin.
   a) Determine appropriate rainfall region and regional scale factor.
   b) Categorize soil types and land cover per Table 3.2.2.B (p. 3-26) and Table 3.2.2.C (p. 3-27).
   c) Determine total impervious areas and effective impervious areas within each subbasin.
   d) Determine areas for each soil/cover type in each subbasin.
   e) Identify the longest flowpath for each land cover type.
   f) Determine the length and slope of the longest unconcentrated flowpath for each post-development land-use type. *Note: The forest, pasture, and wetlands land covers are not as sensitive to variations in surface flowpath. Therefore, KCRTS will not prompt for lengths and slopes from these land covers, and will access the normal (regionally calibrated) runoff files without* ***site****-specific calibration to surface flowpaths.*
3. Determine **peak flows** for the conveyance element being analyzed.
   a) Compute the runoff time series for each subbasin, using 15-minute time steps and specifying the flowpath data for the post-development land covers.
   b) Sum the appropriate subbasin runoff time series, accounting for travel time lags, to obtain the total runoff time series tributary to the drainage feature being analyzed.

DRAFT

c) Conduct a **flow frequency analysis** on the total runoff time series. From this analysis the 10-year, 25-year, and 100-year peak flows can be determined. These design flows can then be used to size or assess the capacity of pipe systems, culverts, channels, spillways, and overflow structures.

3.3.4 SAFETY FACTORS IN HYDROLOGIC DESIGN

It is often appropriate to apply safety factors to detention volumes or conveyance design flows. This manual does not require safety factors for detention or conveyance design, but it does recommend the use of safety factors when the designer believes the results of KCRTS are not sufficiently conservative given local conditions. *The KCRTS methodology does not include inherent safety factors as it is meant to account for "average" conditions. On a particular **site**, KCRTS may overestimate or underestimate flow rates and detention volumes.*

Within any soil/cover group, there is a range of hydrologic response dependent on local soil and geologic conditions for which the KCRTS methodology does not account. The USGS regional parameters for HSPF that were used to create the runoff files produce "average" runoff time series that overestimate peak flows in some basins and underestimate them in others. Similarly, the detention volumes designed with KCRTS for a given conversion type are in the middle of the range of volumes that would be created if exact local hydrologic conditions were known for every project of that type. Therefore, some of the detention facilities designed with KCRTS are oversized and some are undersized, depending on variable ***site*** conditions.

Because of the uncertainty in local hydrologic response, King County recommends, but does not require, that a volume safety factor of 10% be applied to all detention facilities. If downstream resources are especially sensitive, or if the designer believes that KCRTS significantly overestimates predevelopment flows or underestimates post-development flows, a volume safety factor of up to 20% may be appropriate. If a volume safety factor is applied to a detention facility, the volume should be increased by the given percentage at each one-foot stage increment. Safety factors for conveyance systems should be evaluated with respect to the potential damages and costs of failures due to backwatering, overtopping, etc. Applications of safety factors fall strictly within a professional engineer's judgment and accountability for design. Section 4 of the Technical Information Report should state what safety factor was applied to the design of the flow control facility.

DRAFT

3.3.5 DESIGN OPTIONS FOR ADDRESSING DOWNSTREAM PROBLEMS

This section explains the rationale behind the problem-specific mitigation criteria summarized in Chapter 1, Table 1.2.3.A, and it presents acceptable options for addressing the three primary types of downstream drainage problems defined in Core Requirement #2.

1. ***Conveyance system nuisance problems***
2. ***Severe erosion problems***
3. ***Severe flooding problems***.

If one or more of these problems is identified through offsite analysis per Core Requirement #2, the applicant must demonstrate that the proposed project will not create or significantly aggravate the problem. This may require additional analysis, onsite flow control, and/or offsite improvements sufficient to ensure no aggravation of these problems. To reduce the need for extra analysis and to aid in the selection of measures to prevent aggravation, a set of options corresponding to each of the three types of downstream problems is explained in this section. Each option details the extent to which additional measures are needed to prevent aggravation based on the flow control standard being applied to the ***project site***.

❑ OPTIONS FOR ADDRESSING CONVEYANCE SYSTEM NUISANCE PROBLEMS

Problem Description: Overflow from a downstream conveyance system has or is predicted to cause nuisance flooding/erosion of a yard, a pasture, or one side of a roadway for runoff events less than or equal to the 10-year event.

The two options detailed below are acceptable measures for preventing the creation or aggravation of this problem. A combination of these two options may also be used if demonstrated to meet the same performance goals. Other options may be possible through a more rigorous design procedure using the **point of compliance analysis** technique described in Section 3.3.6 (p. 3-51).

The extent of additional onsite flow control or offsite improvements needed depends on the minimum area-specific flow control standard already being applied to the proposed project per Section 1.2.3.1.

DRAFT

Option 1—Additional Onsite Flow Control

- **If Level 1 is the area-specific flow control standard** per Section 1.2.3.1, then expand its performance criteria to match the post-development discharge rate for the 10-year return period to the ***existing site conditions*** discharge rate for the return period T_r at which the conveyance system overflows. *Note: Determining T_r requires a minimum Level 2 downstream analysis as detailed in Chapter 2. To avoid this analysis, a T_r of 2 years may be assumed.*

  Intent: This criteria is intended to prevent creation or aggravation of the problem for runoff events less than or equal to the 10-year event by eliminating the ***project site's*** contribution to conveyance system overflows during these events.

- **If the Level 2 or Level 3 flow control standard** is being applied onsite, no additional flow control is needed. The duration-matching criteria of these standards already prevent aggravating increases in overflow volume by maintaining, or in some cases reducing, the discharge volumes of ***existing site conditions*** for peak flows greater than 50% of the 2-year peak flow.

Option 2—Offsite Improvements

- **If the Level 1 flow control standard** is being applied onsite, then make improvements to the existing conveyance system per Core Requirement #4 (see Section 1.2.4).

- **If the Level 2 or Level 3 flow control standard** is being applied onsite, no offsite improvements are necessary.

❑ OPTIONS FOR ADDRESSING SEVERE EROSION PROBLEMS

Problem Description: A downstream channel, ravine, or slope area has or is predicted to experience severe erosion and/or incision that poses a sedimentation hazard to downstream conveyance systems or poses a landslide hazard by undercutting a steep slope.

The two options detailed below are considered acceptable measures for preventing aggravation of this problem.

The extent of additional onsite flow control or offsite improvements needed depends on the minimum area-specific flow control standard already being applied to the proposed project per Section 1.2.3.1.

Option 1—Additional Onsite Flow Control

- **If Level 1 is the area-specific flow control standard**, then **apply Level 2 instead**, assuming ***existing site conditions*** as the predevelopment condition per Section 1.2.3.1. This standard prevents aggravating increases in the durations of flow exceedance that contribute to erosion.
- **If the Level 2 or Level 3 flow control standard** is being applied onsite, no additional flow control is needed. The duration-matching criteria of these standards prevent aggravating increases in the durations of flow exceedance that contribute to erosion.

Note: If the proposed project's discharge is such that previously unconcentrated flows will be concentrated onto a highly erodible area, DDES may require a tightline system through the area regardless of the level of onsite flow control being provided. This should be addressed with DDES in a predesign meeting.

DRAFT

Option 2—Offsite Improvements

- **If the Level 1 flow control standard** is being applied onsite, then make tightline, channel armoring, or bioengineered improvements to safely convey discharge from the ***project site*** through the severely eroded area.
- **If Level 2 is the required area-specific flow control standard**, offsite tightline or channel armoring improvements may, in some cases, be used to reduce this standard if those improvements drain by non-erodible manmade conveyance to a ***major receiving water*** listed in Section 1.2.3.1. In some cases, DDES may require a tightline if the risk of damage is high.
- **If Level 3 is the required area-specific flow control standard**, offsite tightline or channel armoring improvements may, in some cases, be required by DDES where the risk of damage is high.

❑ OPTIONS FOR ADDRESSING SEVERE FLOODING PROBLEMS

Problem Description: Overflow from a downstream conveyance system, or the elevated water surface of a downstream pond, lake, wetland, or closed depression, has or is predicted to cause a ***severe building flooding problem*** or a ***severe roadway flooding problem***. Such problems, by definition, occur during runoff events less than or equal to the 100-year event. See Section 1.2.2.1 for a more detailed description of severe building and roadway flooding problems.

The two options detailed below are acceptable measures for preventing the creation or significant aggravation of this problem. A combination of these two options may also be used if demonstrated to meet the same performance goals. Other options may be possible through a more rigorous design procedure using the **point of compliance analysis** technique described in Section 3.3.6 (p. 3-51).

The extent of additional onsite flow control or offsite improvements needed depends on the minimum area-specific flow control standard already being applied to the proposed project per Section 1.2.3.1.

Option 1—Additional Onsite Flow Control

- **If Level 1 is the area-specific flow control standard**, then **apply Level 3 instead**, assuming ***existing site conditions*** as the predevelopment condition AND comply with the special provision for closed depressions stated below, if applicable. Also, if the problem is caused by conveyance system overflows, the duration-matching criteria of **Level 3 may be modified** to match post-development discharge durations to predevelopment discharge durations for the range of predevelopment discharge rates between that which corresponds to the return period T_r of conveyance system overflow and the 50-year peak flow, assuming ***existing site conditions*** for the predevelopment condition. *Note: Determining T_r requires a minimum Level 2 downstream analysis as detailed in Chapter 2. To avoid this analysis, a T_r of 2 years may be assumed.*

  Intent: The intent behind Level 3 flow control is described in Section 1.2.3.1. The modified version of Level 3 is intended to prevent aggravating increases in overflow volume, duration, and peak flow for runoff events less than or equal to the 100-year event.

- **If Level 2 is the area-specific flow control standard** (i.e., the project is within a Conservation Flow Control Area), then **apply Level 3 instead**, assuming ***historic site conditions*** as the predevelopment condition AND comply with the special provision for closed depressions stated below, if applicable.

- **If Level 3 is the area-specific flow control standard**, then comply with the special provision for closed depressions stated below, if applicable.

Special Provision for Closed Depressions

If the amount of impervious surface area proposed by the project is greater than or equal to 10% of the 100-year water surface area of the closed depression, then use the **point of compliance analysis** technique described in Section 3.3.6 (p. 3-51) to verify that water surface levels are not increasing for the return frequencies at which flooding occurs, up to and including the 100-year frequency. If necessary, iteratively adjust onsite flow control performance to prevent increases.

Intent: This provision is intended to be applied to those developments that are large enough to have a significant impact on the water surface levels of a closed depression. For such developments, the provision is intended to more closely examine the hydrologic characteristics of the depression to ensure no significant aggravation of the flooding problem. Characteristics such as the infiltration rate or the influence of groundwater fluctuations can be highly variable and difficult to measure, which may entail wet season monitoring for proper analysis.

DRAFT

Option 2—Offsite Improvements

- **If the Level 1 or Level 2 flow control standard** is being applied onsite and the problem is caused by conveyance system overflows, then make improvements to the existing conveyance system sufficient to prevent the ***severe flooding problem***. If the problem is caused by the elevated water surface of a pond, lake, wetland, or closed depression, then make improvements to the live storage volume or discharge characteristics of the water body in question such that water surface levels for the frequencies at which flooding occurs are not increased, OR make improvements to elevate the flooding building or roadway above the 100-year water surface.

- **If the Level 3 flow control standard** is being applied onsite and the special provision for closed depressions is applicable, then make improvements as described above for the Level 1 and Level 2 flow control standards. Otherwise, offsite improvements are not required.

3.3.6 POINT OF COMPLIANCE ANALYSIS

The *point of compliance* is the location where flow control performance standards are evaluated. In most cases, the point of compliance is the outlet of a proposed detention facility where, for example, 2- and 10-year discharges must match predevelopment 2- and 10-year peak flow rates.

The point of compliance for hydrologic control moves downstream of the detention facility outlet or the property boundary under the following circumstances:

1. The proposed project discharges to an **offsite closed depression with a *severe flooding problem*** per Section 1.2.2, and the project adds impervious surface greater than or equal to 10% of the 100-year water surface area of the closed depression (see Table 1.2.3.A). In these cases, the closed depression becomes the point of compliance, and the engineer must ensure that ***project site*** runoff does not aggravate the flooding problem (or create a new flooding problem).
2. The proposed project includes an **onsite runoff bypass,** a small developed area that bypasses the flow control facility (see Section 1.2.3.2). In such cases, runoff from the remainder of the ***project site*** is overdetained so that the sum of the detained and undetained flows meets the required flow control performance standard. The point of compliance for such projects is where the onsite bypass flows join the detained flows.
3. The proposed project **bypasses offsite flows** around an onsite closed depression, ponding area, or wetland (see Section 3.3.7, p. 3-54). As with onsite bypasses, the point of compliance in this case is where detained flows converge with the bypassed flows.

The **Facility Sizing routine within KCRTS** allows the user to analyze the facility performance at a downstream point of compliance through the Automatic Analysis routine.

Note: When controlling flow durations at a downstream point of compliance to demonstrate no adverse impact, the 10% tolerance specified for Level 2 performance (p. 3-33) may ***not*** *be used. Predevelopment condition flow durations should be matched to the extent feasible for all flows above the level of concern. The resultant facility should also be checked to verify that the minimum onsite performance standard (e.g., Level 1, Level 2, or Level 3 per Section 1.2.3.1) has also been met.*

DRAFT

❑ OFFSITE CLOSED DEPRESSIONS

If a project drains to an offsite closed depression with existing or potential flooding problems, then the water surface levels of the closed depression must not be allowed to increase for return frequencies at which flooding occurs, up to and including the 100-year frequency. This section describes the point of compliance analysis necessary to size detention facilities discharging to such a closed depression.

The closed depression is first modeled (using the ***site's*** predevelopment condition) to determine the return frequency at which flooding currently occurs and the water levels associated with return frequencies in excess of this frequency. These flooding levels and their probabilities dictate the detention performance for the proposed development. The proposed detention facility is then iteratively sized such that discharge from the ***site's*** post-development condition does not increase water surface levels for the frequencies at which flooding occurs—that is, after development, water level frequency curves must match for all frequencies equal to or greater than the frequency at which flooding occurs (up to the 100-year water level).

The infiltration rate must be determined in order to accurately model the closed depression. *In the case of a closed depression with an existing flooding problem, the infiltration rate is most realistically depicted by calibrating the model to known flooding events.* This should be done using the full historical runoff files (available on request from DNRP) and setting the closed depression outflow (infiltration) such that recorded or anecdotal levels of flooding occur during the same storm events in the historical record.

Where a flooding problem might be created by discharge of post-development flows to a closed depression, and in the absence of information on dates and water surface levels in the closed depression during past runoff events, infiltration rates must be determined through testing as follows:

- For a closed depression without standing water, two or more **test pits** should be dug in the bottom of the closed depression to a depth of 10 feet or to the water table, whichever is reached first. The test pits shall be dug under the supervision of a geotechnical engineer, and a test pit log shall be kept. Evidence of high water table shall be noted.
- If the test pit reveals deep homogeneous permeable material with no evidence of a high water table, then infiltration tests shall be performed in the bottom of the closed depression at locations of similar elevation and on opposite sides of the bottom area (as feasible). **Surface infiltration rates** shall be determined using the methods for assessing measured infiltration rates included in Section 5.4. The measured rates should be used directly, without applying correction factors.
- If the closed depression has standing water or is a SAO-defined wetland, or if test pits show evidence of a high water table or underlying impermeable material, then procedures for determining infiltration rates will be established on a case-by-case basis in coordination with DDES geologists.
- In the event that a closed depression with a documented ***severe flooding problem*** is located on private property and all reasonable attempts to gain **access to the closed depression** have been **denied**, the Level 3 flow control standard shall be applied with a 20% factor of safety on the storage volume.

❑ ONSITE RUNOFF BYPASS

It is sometimes impractical to collect and detain runoff from an entire project area, so provisions are made to allow undetained discharge from onsite bypass areas (see Section 1.2.3.2) while overdetaining the remainder of the runoff to compensate for unmitigated flows. A schematic of an onsite runoff bypass is shown in Figure 3.3.6.A (next page).

For projects employing onsite runoff bypass, flow control performance standards are evaluated at the point of compliance, the point where detained and undetained flows from the ***project site*** are combined.

DRAFT

Point of Compliance Analysis for Onsite Bypass Areas

1. Create a **predeveloped condition runoff time series** for the entire project area including the predevelopment detained area and the predevelopment bypass area. Determine **flow targets** (either flow frequencies or durations, depending on the applicable design standard) from the predeveloped condition runoff time series.
2. Create separate **developed condition runoff time series** for the detained area and the bypass area.
3. Ensure that the flow characteristics of the developed runoff time series for the bypass area do not exceed the targets determined in Step 1 or the 0.4 cfs threshold in Core Requirement #3. If the bypass area flows exceed the targets or threshold, then the bypass is not feasible.
4. Estimate **allowable release rates** from the detention facility for each return period of interest with the following equation:

$$\text{Allowable release} = (\text{Total Project Area Flow})_{\text{predeveloped cond.}} - (\text{Bypass Area Flow})_{\text{developed cond.}}$$

Note: KCRTS version 4.0 and later supports the direct sizing of onsite detention facilities based on the results at a downstream point-of-compliance. See the KCRTS Software Documentation for further details.

5. Develop a **preliminary design of the flow control facility** based on the estimated release rate.
6. **Route** post-development flows from the detained area through the detention facility, and create a detention facility outflow time series.
7. Determine the **total project post-development outflow** by adding the detention facility outflow runoff time series to the post-development runoff time series from the bypass area.

8. Check characteristics of the total project post-development outflow against the targets determined in Step 1.
9. If compliance is not achieved (e.g., 2- and 10-year post-development flows exceed 2- and 10-year predevelopment flows), repeat Steps 6 through 8. *Steps 6 through 8 have been automated for facility sizing by using the point of compliance option of the KCRTS (version 4.0 and later) Automatic Iteration and Automatic Analysis routines.*

FIGURE 3.3.6.A SCHEMATIC OF AN ONSITE RUNOFF BYPASS

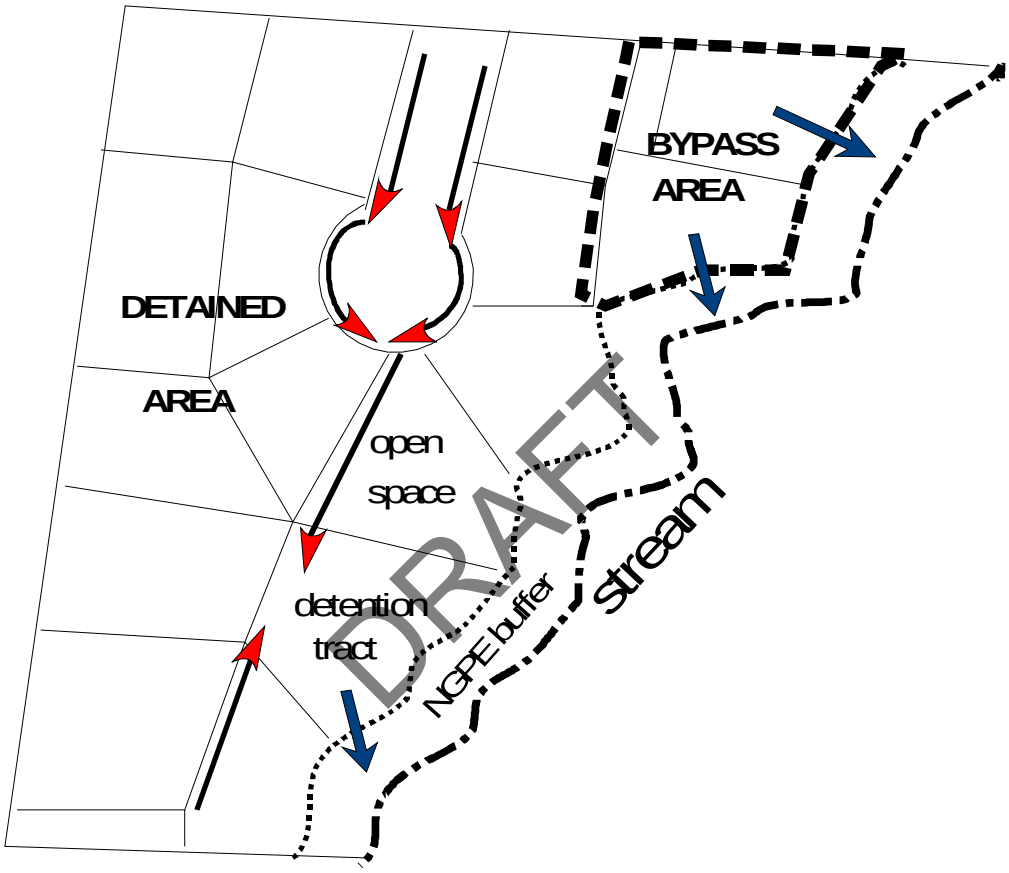

3.3.7 ONSITE CLOSED DEPRESSIONS AND PONDING AREAS

Onsite closed depressions, ponding areas, and wetlands require special consideration when determining detention performance targets; if altered, they can shift the point of compliance downstream. However, the critical areas code (KCC 21A.24) regulates wetlands (*note that most closed depressions and ponding areas are wetlands by definition*) and generally does not permit alteration through either filling or gross hydrologic changes such as bypassing offsite flows. *Note: Post-development discharges to offsite closed depressions, ponding areas, or wetlands (with the exception of those in Flood Problem Flow Control Areas per the Flow Control Applications Map or those discussed in Section 3.3.6) are normally not required to meet special performance standards unless there is a* ***severe flooding problem*** *as defined in Section 1.2.2.*

❑ GENERAL REQUIREMENTS

The following general requirements apply to **onsite closed depressions, ponding areas, and wetlands** (referred to below as "features"):

1. **Flow attenuation** provided by onsite wetlands and ponding areas, and storage provided by onsite closed depressions must be accounted for when computing both existing onsite and offsite flows.
   - **Existing onsite flows** must be routed through onsite wetlands and ponding areas to provide accurate target release rates for the developed ***site***. *Note: Closed depressions will have no outflow for some portions of the* ***site*** *for some events, although overflow may occur during extreme events.*
   - **Existing offsite flows** will increase at the project boundary if the feature is filled or if the offsite flows are bypassed around the feature. To compensate, post-development onsite flows must be overdetained, and the point of compliance will shift downstream to where the detained flows converge with the bypassed offsite flows.
2. **If the onsite feature is used for detention**, the 100-year floodplain must be delineated considering developed onsite and existing offsite flows to the feature. *Note: Additional storage volume may be necessary within the feature, and the point of compliance is the discharge point from the feature.*
3. **If the detention facility for the proposed project discharges to an onsite wetland, ponding area, or closed depression that is not altered[3] by the proposed project, AND Level 2 or Level 3 flow control is provided**, the point of compliance is the discharge point of the detention facility, not the outlet of the onsite feature. If Level 1 flow control is being provided, the point of compliance is the outlet of the onsite feature.

DRAFT

❑ FLOODPLAIN DELINEATION FOR LAKES, WETLANDS, CLOSED DEPRESSIONS, AND PONDING AREAS

A minor floodplain analysis is required for onsite or adjacent lakes, wetlands, and closed depressions that do not have an approved floodplain or flood hazard study (see Section 4.4.2; note the exceptions). Minor floodplain studies establish an assumed base flood elevation below which development is not allowed.

The following are guidelines for minor floodplain analysis of volume sensitive water bodies:

1. **Create time series** representing tributary flows to the feature from the entire tributary area. Where the feature is contained entirely onsite and where no offsite flows exist, use the tributary area for the proposed developed condition.
2. **Use the full historical runoff files** (available from DNRP) to create the runoff time series.

[3] *Not altered* means existing on- and offsite flows to the feature will remain unchanged and the feature will not be excavated or filled.

3. Where the feature is only partially onsite, or where there are offsite flows to the feature, **assume the entire tributary area is fully built out under current zoning**, accounting for required open space and protected critical areas in the basin as well as impervious surfaces and grass.
4. **For potential future development, assume detention standards per Section 1.2.3.1. For simplicity the proposed detention may be simulated with a single assumed detention pond just upstream of the feature.** This pond should be sized to the appropriate detention standard and predevelopment condition assumption as noted in Section 1.2.3.1 and will require generating a predevelopment time series for the basin. Large water bodies may provide significant floodwater storage and may also be included in the analysis. Most existing detention in the basin, with exception of that providing duration control, will have little effect on the analysis and should be discounted.
5. Sum all subbasin time series to create a **single composite time series** for the drainage feature.
6. Develop **routing curves** for the feature. As appropriate, consider infiltration as an outflow for closed depressions.
7. **Route the time series** through the storage feature, generate water surface frequency curves, and note the 100-year water surface elevation.

DRAFT

CHAPTER 4

CONVEYANCE SYSTEM ANALYSIS & DESIGN

KING COUNTY, WASHINGTON

SURFACE WATER DESIGN MANUAL

Section 4.1	**Route Design and Easement Requirements**	**4-3**
Section 4.1.1	Route Design	4-3
Section 4.1.2	Easement and Setback Requirements	4-3
Section 4.2	**Pipes, Outfalls, and Pumps**	**4-7**
Section 4.2.1	Pipe Systems	4-7
Section 4.2.2	Outfall Systems	4-29
Section 4.2.3	Pump Systems	4-36
Section 4.3	**Culverts and Bridges**	**4-37**
Section 4.3.1	Culverts	4-37
Section 4.3.2	Culverts Providing for Fish Passage/Migration	4-51
Section 4.3.3	Bridges	4-53
Section 4.4	**Open Channels, Floodplains, and Floodways**	**4-55**
Section 4.4.1	Open Channels	4-55
Section 4.4.2	Floodplain/Floodway Analysis	4-71

DRAFT

DRAFT

CHAPTER 4

CONVEYANCE SYSTEM ANALYSIS & DESIGN

This chapter presents King County approved methods for the hydraulic analysis and design of conveyance systems. A *conveyance system* includes all portions of the surface water system, either natural or man-made, that transports surface and storm water runoff.

This chapter contains the detailed design criteria, methods of analysis, and standard details for all components of the conveyance system. In some cases, reference is made to other adopted or accepted design standards and criteria such as the *King County Road Standards (KCRS)*, the *Washington State Department of Transportation/APWA (WSDOT/APWA) Standard Specifications for Road, Bridge, and Municipal Construction* (most recent edition), and a King County supplement to the WSDOT/APWA standards called the *General Special Provisions*.

DRAFT

Chapter Organization

The information presented in this chapter is organized into four main sections:

- Section 4.1, "Route Design and Easement Requirements" (p. 4-3)
- Section 4.2, "Pipes, Outfalls, and Pumps" (p. 4-7)
- Section 4.3, "Culverts and Bridges" (p. 4-37)
- Section 4.4, "Open Channels, Floodplains, and Floodways" (p. 4-51).

These sections begin on odd pages so the user can insert tabs if desired for quicker reference.

Required vs. Recommended Design Criteria

Both required and recommended design criteria are presented in this chapter. Criteria stated using "shall" or "must" are mandatory, to be followed unless there is a good reason to deviate as allowed by the adjustment process (see Section 1.4). These criteria are **required design criteria** and generally affect facility performance or critical maintenance factors.

Sometimes options are stated as part of the required design criteria using the language "should" or "may." These criteria are really **recommended design criteria**, but are so closely related to the required criteria that they are placed with it.

DRAFT

4.1 ROUTE DESIGN AND EASEMENT REQUIREMENTS

This section presents the general requirements for aligning conveyance systems and providing easements and setbacks to allow for proper maintenance and inspection of all conveyance system elements.

4.1.1 ROUTE DESIGN

The most efficient route selected for new conveyance systems will result from careful consideration of the topography of the area to be traversed, the legal property boundaries, and access for inspection and maintenance. The general requirements for route design are as follows:

1. Proposed new conveyance systems should be aligned to **emulate the natural conveyance system** to the extent feasible. Inflow to the system and discharge from the system should occur at the natural drainage points as determined by topography and existing drainage patterns.

2. New conveyance system alignments in **residential subdivisions** should be located **adjacent and parallel to property lines** so that required drainage easements can be situated along property lines. Drainage easements should be located entirely on one property and not split between adjacent properties.

   Exception: Streams and natural drainage channels shall not be relocated to meet this requirement.

3. Aesthetic considerations and traffic routes may dictate the placement and **alignment of open channels**. Appropriate vehicular and pedestrian traffic crossings must be provided in the design.

DRAFT

4.1.2 EASEMENT AND SETBACK REQUIREMENTS

Proposed projects must comply with the following easement and setback requirements unless otherwise approved by DDES:

1. Any **onsite** conveyance system element constructed as part of **subdivision project** shall be located in a dedicated drainage easement, tract, or right-of-way that preserves the system's route and conveyance capacity and grants King County right of access for inspection, maintenance, and repair.

   Exception: Roof downspout, minor yard, and footing drains do not require easements, tracts, or right-of-way. If easements are provided for these minor drains (or for other utilities such as power, gas, or telephone), they need not comply with the requirements of this section.

   Note: except for those facilities that have been formally accepted for maintenance by King County, maintenance and repair of drainage facilities on private property is the responsibility of the property owner. Except for the inflow pipe and discharge pipe of a County-accepted flow control or water quality facility, King County does not normally accept maintenance of conveyance systems constructed through private property.

2. Any **onsite** conveyance system element constructed under a **commercial building or commercial development permit** shall be covered by the drainage facility declaration of covenant and grant of easement in Reference Section 8-J (or equivalent) that provides King County right of access for inspection, maintenance, and repair. *Note: except for those facilities that have been formally accepted for maintenance by King County, maintenance and repair of drainage facilities on private property is the responsibility of the property owner.*

3. Any **offsite** conveyance system element constructed through private property as part of a proposed project shall be located in a drainage easement per Reference Section 8-L (or equivalent). If an offsite conveyance system through private property is proposed by a project to convey runoff diverted from the ***natural discharge location***, DDES may require a drainage release covenant per Reference Section 8-K as a condition of approval of the adjustment required in Section 1.2.1.

4. A **river protection easement** per Reference Section 8-P (or equivalent) shall be required for all properties adjoining or including *major rivers*[1] as described in Table 4.1 (p. 4-5).
5. Table 4.1 (p. 4-5) lists the required **widths and building setback lines for drainage easements**. For all pipes or any channels or constructed swales greater than 30 feet wide, facilities must be placed in the center of the easement. For channels or constructed swales less than or equal to 30 feet wide, the easement extends to only one side of the facility.
6. Any portion of a conveyance system drainage easement (shown in Table 4.1) shall not be located within an **adjacent property or right-of-way**. Building setback lines may cross into adjacent property.
7. The distance between the easement line and building or other structure footings shall be no less than the **building setback line (BSBL) distance** shown in Table 4.1.

   Exception: The BSBL may be measured from the edge of a pipe in the easement plus 2 feet if all of the following conditions are met:

   a) As-builts showing the location of the pipe are submitted

   b) A geotechnical/structure analysis demonstrates stability of the proposed structure

   c) Access for maintenance/replacement remains unobstructed.

DRAFT

[1] *Major rivers* are defined in the King County Flood Hazard Reduction Plan.

TABLE 4.1 EASEMENT WIDTHS AND BUILDING SETBACK LINES

For Pipes: [1] **Inside Diameter (ID)**	**Easement Width**	**BSBL (From Easement)**
ID ≤ 36”	depth to invert < 8': 10 feet[2] depth to invert > 8': 15 feet	5 feet
36” < ID ≤ 60”	depth to invert < 8': 10 feet[2] depth to invert > 8': 15 feet	7.5 feet
ID > 60”	ID plus 10 feet	10 feet
For Channels and Swales: **Top Width of Channel (W)**	**Easement Width**	**BSBL (From Easement)**
W ≤ 10 feet	W plus 10 feet on one side W if no access required[3]	5 feet
10 feet < W ≤ 30 feet	W plus 15 feet on one side	5 feet
W > 30 feet	W plus 15 feet on both sides	5 feet
For Major Rivers	**Easement Width**	**BSBL (From Easement)**
See the *King County Flood Hazard Reduction Plan* for a list of the major rivers	Varies per ***site*** conditions Minimum 30 feet from stable top of bank[4]	5 feet

Notes:

(1) Pipes installed deeper than 10 feet require one of the following actions:

- Increase the BSBL such that the distance from the BSBL to the centerline of the pipe is at least 1.5 times the depth to pipe invert, or
- Place a restriction on adjacent lots that the footings be placed at a specific elevation, deep enough that the closest horizontal distance from the footing to the pipe centerline is 1.5 times the difference in elevation of the footing and pipe invert, or
- Place a restriction on adjacent lots that the footings be designed by a geotechnical engineer or licensed engineering geologist, such that excavation of the pipe may be performed without necessitating shoring of adjacent structures.

(2) Fifteen-foot easement width is required for maintenance access to all manholes, inlets, and culverts.

(3) Access is not required for small channels if the channel gradient is greater than 5% (assumes steep channels will be self-cleaning).

(4) Stable top of bank shall be as determined by King County.

DRAFT

DRAFT

4.2 PIPES, OUTFALLS, AND PUMPS

This section presents the methods, criteria, and details for analysis and design of pipe systems, outfalls, and pump-dependent conveyance systems. The information presented is organized as follows:

Section 4.2.1, "Pipe Systems"
"Design Criteria," Section 4.2.1.1
"Methods of Analysis," Section 4.2.1.2 (p. 4-19)

Section 4.2.2, "Outfall Systems"
"Design Criteria," Section 4.2.2.1 (p. 4-29)

Section 4.2.3, "Pump Systems"
"Design Criteria," Section 4.2.3.1 (p. 4-36)
"Methods of Analysis," Section 4.2.3.2 (p. 4-36)

4.2.1 PIPE SYSTEMS

Pipe systems are networks of storm drain pipes, catch basins, manholes, inlets, and outfalls designed and constructed to convey surface water. The hydraulic analysis of flow in storm drain pipes typically is limited to gravity flow; however, in analyzing existing systems it may be necessary to address pressurized conditions. A properly designed pipe system will maximize hydraulic efficiency by utilizing proper material, slope, and pipe size.

DRAFT

4.2.1.1 DESIGN CRITERIA

General

All pipe material, joints, and protective treatment shall be in accordance with Section 9.05 of the *WSDOT/APWA Standard Specifications* as modified by the *King County Road Standards* and AASHTO and ASTM treatment as noted below under "Allowable Pipe Materials."

Note: The pipe materials and specifications included in this section are for conveyance systems installed according to engineering plans required for King County permits/approvals. Other pipe materials and specifications may be used by private property owners for drainage systems they construct and maintain when such systems are not required by or granted to King County.

Acceptable Pipe Sizes

The following pipe sizes shall be used for **pipe systems to be maintained by King County**: 8-inch (generally for use only in privately maintained systems or in special cases within road right-of-way; see *KCRS*), 12-inch, 15-inch, 18-inch, 21-inch, 24-inch, and 30-inch. For pipes larger than 30-inch diameter, increasing increments of 6-inch intervals shall be used (36-inch, 42-inch, 48-inch, etc.).

Allowable Pipe Materials

The following pipe materials are allowed for use in meeting the requirements of this manual. Refer to WSDOT/APWA 7-04 and 9-05 for detailed specifications for acceptable pipe materials. Refer to the *King County Road Standards (KCRS)* for pipe materials allowed in King County road right-of-way.

1. Plain and reinforced concrete pipe
2. Corrugated or spiral rib aluminum pipe

3. Corrugated steel pipe, Aluminized or Galvanized[2] with treatments 1 through 6
4. Spiral rib steel pipe, Aluminized or Galvanized with treatments 1 through 6
5. Ductile iron (water supply, Class 50 or 52)
6. Lined corrugated polyethylene pipe (LCPE)[3]
7. Corrugated polyethylene pipe (CPE)[4] that is single wall and fully corrugated
8. Polyvinyl chloride (PVC)[5] pipe
9. Solid wall polyethylene pipe (SWPE; also known as HDPE pipe or HDPP)[6]

Allowable Pipe Joints

1. Concrete pipe shall be rubber gasketed.
2. CMP shall be rubber gasketed and securely banded.
3. Spiral rib pipe shall be "hat-banded" with neoprene gaskets.
4. Ductile pipe joints shall be flanged, bell and spigot, or restrained mechanical joints.
5. LCPE pipe joints shall conform to the current *WSDOT/APWA Standard Specifications*.
6. CPE single wall, fully corrugated pipe joints shall conform to the current *WSDOT/APWA Standard Specifications*.
7. PVC pipe shall be installed following procedures outlined in ASTM D2321; joints shall conform to ASTM D3212, and gaskets shall conform to ASTM F477.
8. SWPE pipe shall be jointed by butt fusion methods or flanged according to the *KCRS*.

DRAFT

[2] Galvanized metals leach zinc into the environment, especially in standing water situations. High zinc concentrations, sometimes in the range that can be toxic to aquatic life, have been observed in the region. Therefore, use of galvanized materials should be avoided. Where other metals, such as aluminum or stainless steel, or plastics are available, they shall be used. If these materials are not available, asphalt coated galvanized materials may then be used.

[3] LCPE pipe and fittings shall be manufactured from high density polyethylene resin which shall meet or exceed the requirements of Type 111, Category 3, 4 or 5, Grade P23, P33 or P34, Class C per ASTM D1248. In addition, the pipe shall comply with all material and stiffness requirements of AASHTO M294.

[4] CPE pipe (single wall, fully corrugated) is allowed only for use in private storm sewer systems such as downspout, footing, or yard drain collectors on private property (smooth interior required in road right-of-way for drainage stub-outs or perforated as subgrade drain per *KCRS*).

[5] PVC pipe is allowed only for use in privately maintained drainage systems or as allowed in road right-of-way per *KCRS*. PVC pipe must be SDR 35 or thicker and meet the requirements of ASTM D3034.

[6] SWPE pipe is normally used outside of King County right-of-way, such as on steep slope installations (see Section 4.2.2, p. 4-29). Connections to King County road drainage systems are allowed for pipe diameters of 12" or greater. SWPE pipe shall comply with the requirements of Type III C5P34 as tabulated in ASTM D1248, shall have the PPI recommended designation of PE3408, and shall have an ASTM D3350 cell classification of 345534C. The pipe shall have a manufacturer's recommended hydrostatic design stress rating of 800 psi based on a material with a 1600 psi design basis determined in accordance with ASTM D2837-69. The pipe shall have a suggested design working pressure of 50 psi at 73.4^{o} F and SDR of 32.5.

Pipe Alignment

1. Pipes must be laid true to line and grade with no curves, bends, or deflections in any direction.

   Exception: Vertical deflections in SWPE and ductile iron pipe with flanged restrained mechanical joint bends (not greater than 30°) on steep slopes, provided the pipe drains.

2. A **break in grade** or alignment, or changes in pipe material shall occur only at catch basins or manholes.

Maximum Pipe Slopes and Velocities

Table 4.2.1.A presents maximum pipe slopes and velocities by pipe material.

TABLE 4.2.1.A MAXIMUM PIPE SLOPES AND VELOCITIES

Pipe Material	Pipe Slope above which Pipe Anchors Required and Minimum Anchor Spacing	Maximum Slope Allowed	Maximum Velocity at Full Flow
CMP, Spiral Rib, PVC, CPE(1)	20% (1 anchor per 100 LF of pipe)	30%(3)	30 fps
Concrete or LCPE(1)	10% (1 anchor per 50 LF of pipe)	20%(3)	30 fps
Ductile Iron(2)	20% (1 anchor per pipe section)	None	None
SWPE(2)	20% (1 anchor per 100 LF of pipe, cross-slope installations only)	None	None

Notes:

(1) These materials are not allowed in ***landslide hazard areas***.

(2) Butt-fused or flanged pipe joints are required; above ground installation is recommended on slopes greater than 40%.

(3) A maximum slope of 200% is allowed for these pipe materials with no joints (one section), with structures at each end, and with proper grouting.

DRAFT

Changes in Pipe Size

1. Increase or decreases in pipe size are **allowed only at junctions and structures**. *Exceptions may be allowed per Section 7.04C of the KCRS.*
2. When **connecting pipes at structures**, match any of the following (in descending order of preference): crowns, 80% diameters,[7] or inverts of pipes. Side lateral connections[8], 12 inches and smaller, are exempt from this requirement.
3. **Drop manholes** may be used for energy dissipation when pipe velocities exceed 10 feet per second. External drop manholes are preferred where maintenance access to the upstream pipe is preserved by use of a tee section. Internal drop structures may be approved only if adequate scour protection is provided for the manhole walls. Drop structures must be individually engineered to account for design variations, such as flow rates, velocities, scour potential, and tipping forces.
4. **Downsizing** pipes larger than 12 inches may be allowed provided pipe capacity is adequate for design flows.

Note: The above criteria do not apply to detention tanks.

Structures

Table 4.2.1.B below lists typical drainage structures with corresponding maximum allowable pipe sizes.

1. Catch basin (or manhole) diameter shall be determined by pipe orientation at the junction structure. A **plan view of the junction structure**, drawn to scale, will be required when more than four pipes enter the structure on the same plane, or if angles of approach and clearance between pipes is of concern. The plan view (and sections if necessary) must ensure a minimum distance (of solid concrete wall) between pipe openings of 8 inches for 48-inch and 54-inch catch basins, and 12 inches for 72-inch and 96-inch catch basins.
2. Evaluation of the structural integrity for **H-20 loading,** or as required by the *King County Road Standards*, may be required for multiple junction catch basins and other structures.
3. Catch basins shall be provided within 50 feet of the **entrance to a pipe system** to provide for silt and debris removal.
4. **All SWPE pipe systems** (including buried SWPE pipe) must be secured at the upstream end. The downstream end shall be placed in a 4-foot section of the next larger pipe size. This sliding sleeve connection allows for the high thermal expansion/contraction coefficient of this pipe material.
5. The **maximum slope of the ground surface** for a radius of 5 feet around a catch basin grate or solid lid should be 5:1 to facilitate maintenance access. Where not physically feasible, a maximum slope of 3:1 (H:V) shall be provided around at least 50% of the catch basin circumference.

DRAFT

[7] Match point is at 80% of the pipe diameter, measured from the invert of the respective pipes.

[8] Side laterals include any 8-inch or smaller pipe connected to the main conveyance system at a catch basin, or manhole, as allowed under this manual and/or the King County Road Standards. In addition, 12-inch and smaller pipes that serve a single inlet point (e.g., roadway simple inlets, footing drains, and lot stubouts including manifold systems serving multiple residential lots) are also included. Excluded from this definition are inlet pipes which contribute 30% or more of the total flow into a catch basin, or which collect or convey flows from a continuous source.

TABLE 4.2.1.B ALLOWABLE STRUCTURES AND PIPE SIZES		
	Maximum Pipe Diameter	
Catch Basin Type(1)	**CMP, Spiral Rib, CPE, SWPE, PVC, and Ductile Iron(2)**	**Concrete LCPE**
Inlet(4)	12"	12"
Type 1(3)	18"	12"
Type 1L(3)	24"	18"
Type 2 - 48-inch dia.	30"	24"
Type 2 - 54-inch dia.	36"	30"
Type 2 - 72-inch dia.	54"	48"
Type 2 - 96-inch dia.	72"	72"

Notes:

(1) Catch basins (including manhole steps, ladder, and handholds) shall conform to *King County Road Standards.*

(2) Generally these pipe materials will be one size larger than concrete due to smaller wall thickness. However, for angled connections or those with several pipes on the same plane, this will not apply.

(3) A maximum of 5 vertical feet is allowed between finished grade and invert elevation.

(4) Inlets are normally allowed only for use in privately maintained drainage systems and must discharge to a catch basin immediately downstream.

DRAFT

Pipe Design between Structures

The following requirements are for privately maintained or County maintained off-road right-of-way pipe systems. See *KCRS* for pipe design between structures in County road right-of-way.

1. **Minimum velocity** at full flow should be 3.0 feet per second. If *site* constraints result in velocities less than 3 feet per second at full flow, impacts from sedimentation in the pipe system shall be addressed with larger pipes, closer spacing of structures, sediment basins, or other similar measures.
2. **Minimum slope** for 8-inch pipes shall be 0.5%; minimum slope for 12-inch or larger pipes shall be 0.2%.
3. **Maximum lengths** between structures shall be 300 feet (for design flows greater than 3 fps). Tightlines down steep slopes are self cleaning and do not require structures for maintenance.

Pipe Cover

1. Pipe cover, measured from the finished grade elevation to the top of the outside surface of the pipe, shall be **2 feet minimum** unless otherwise specified or allowed below. Under drainage easements, driveways, parking stalls, or other areas subject to light vehicular loading, pipe cover may be reduced to 1 foot minimum if the design considers expected vehicular loading and the cover is consistent with pipe manufacturer's recommendations. Pipe cover in areas not subject to vehicular loads, such as landscape planters and yards, may be reduced to 1 foot minimum.
2. Pipe cover over storm pipes in King County **road right-of-way** shall comply with the *KCRS*. Pipe **cover over concrete pipe** shall comply with Table 4.2.1.C (p. 4-12). For other pipe types, the

manufacturer's specifications or other documentation shall be provided for proposed cover in excess of 30 feet. *Caution: Additional precautions to protect against crushing during construction may be needed under roadways if the road bed is included to meet minimum cover requirements. Damaged pipe shall be replaced.*

3. For proposed **pipe arches**, the manufacturer's specifications or other documentation shall be provided for proposed cover in excess of 8 feet.

4. Pipe cover over **PVC SDR 35** shall be 3 feet minimum and 30 feet maximum.

TABLE 4.2.1.C MAXIMUM COVER (FEET) FOR CONCRETE PIPE COMPACTION DESIGN A

Pipe Diameter (inches)	Plain	Class II	Class III	Class IV	Class V
12	18	10	14	21	26
18	18	11	14	22	28
24	16	11	15	22	28
30		11	15	23	29
36		11	15	23	29
48		12	15	23	29
60		12	16	24	30
72		12	16	24	30
84		12	16	24	30
96		12	16	24	30
108		12	16	24	30

Note: Compaction Design A refers to Figure 4.2.1.A (p. 4-14).

DRAFT

Pipe Clearances

A minimum of 6 inches vertical and 3 feet horizontal clearance (outside surfaces) shall be provided between storm drain pipes and other utility pipes and conduits. **Clearances** within King County right-of-way shall comply with the *KCRS*. When crossing sanitary sewer lines, the Washington Department of Ecology criteria shall apply. When crossing swale easements, minimum specified cover shall be increased by 6 inches.

Pipe Compaction and Backfill

Pipe compaction and backfill shall be in accordance with Figure 4.2.1.A (p. 4-14). Where pipes pass through flood containment structures, these standards shall be supplemented and modified as necessary in accordance with standards set forth in *Corps of Engineers Manual for Design and Construction of Levees* (EM 1110-2-1913).

Pipe System Connections

Connections to a pipe system shall be made only at catch basins or manholes. No wyes or tees are allowed except on roof/footing/yard drain systems on pipes 8 inches in diameter or less, with clean-outs upstream of each wye or tee. Additional exceptions may be made in accordance with Section 7.03D of the *KCRS* and for steep slope applications of SWPE pipe, as deemed prudent by geotechnical review.

Pipe Anchors

Table 4.2.1.A (p. 4-9) presents the requirements, by pipe material, for anchoring pipe systems. Figure 4.2.1.B (p. 4-15) and Figure 4.2.1.C (p. 4-16) show typical details of pipe anchors.

Spill Control

Spill control is required for projects constructing or replacing onsite pipe systems that receive runoff from pollution-generating surfaces such as roads or parking lots. Spill control measures are intended to temporarily detain oil or other floatable pollutants and prevent them from entering the downstream conveyance system, water quality facility, or flow control facility in the event of an accidental spill or illegal dumping. Allowable options for providing spill control include the following:

a) A **tee section** in one of the lowest manholes or catch basins in the system (see Figure 5.3.4.A)

b) An **API or coalescing plate oil/water separator**

c) A **tee section in a wet vault, or detention tank or vault** (provided water quality facilities are downstream of the detention tank or vault)

d) An **active spill control plan.** To use this option, the spill control plan and summary of an existing or proposed training schedule must be submitted as part of the drainage review submittal. At a minimum, such plans must include the following:

- Instructions for isolating the ***site*** to prevent spills from moving downstream (shutoff valves, blocking catch basins, etc.)
- Onsite location of spill clean-up materials
- Phone numbers to call for emergency response
- Phone numbers of company officials to notify
- Special safety precautions, if applicable.

DRAFT

Debris Barriers

Debris barriers (trash racks) are required on all pipes 18 to 36 inches in diameter entering a closed pipe system. Debris barriers shall have a bar spacing of 6 inches. See Figure 4.2.1.D (p. 4-17) for required debris barriers on pipe ends outside of roadways. See Figure 4.2.1.E (p. 4-18) and Section 4.3 (p. 4-37) for requirements on pipe ends (culverts) projecting from driveway or roadway side slopes.

Outfalls

Outfalls shall be designed as detailed in Section 4.2.2 (p. 4-29).

Other Details

In addition to the details shown in Figure 4.2.1.A (p. 4-14) through Figure 4.2.1.E (p. 4-18), Standard Construction Details are available in the *King County Road Standards* and *APWA/WSDOT Standard Plans for Road, Bridge and Municipal Construction*. Commonly used details include field tapping of concrete pipe, catch basins and catch basin details, manholes and manhole details, curb inlets, frames, grates, and covers.

FIGURE 4.2.1.A PIPE COMPACTION DESIGNS AND BACKFILL

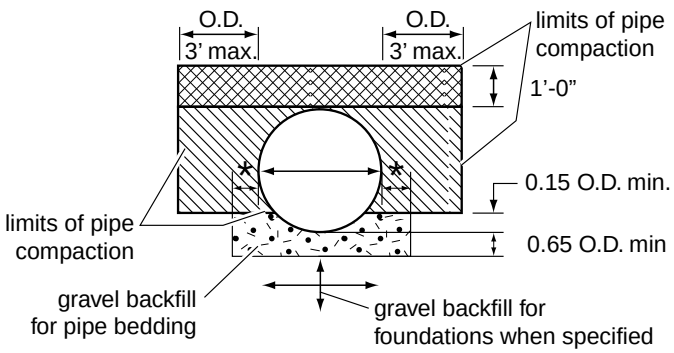

A. Metal and Concrete Pipe

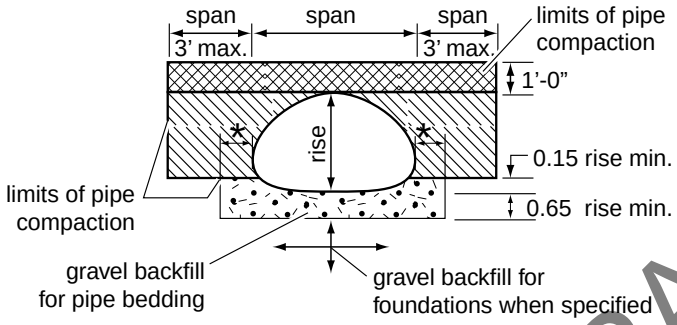

B. Pipe - Arch Installation

Rigid Pipe NOTES:

1. Pipe compaction limits shown on this plan are for pipe construction in an embankment. For pipe construction in a trench, the horizontal limits of the pipe compaction zone shall be the walls of the trench.
2. All steel and aluminum pipe and pipe-arches shall be installed in accordance with design A.
3. Concrete pipe with elliptical reinforcement shall be installed in accordance with design A.
4. Concrete pipe, plain or with circular reinforcement, shall be installed with design A.
5. O.D. is equal to the outside diameter of a pipe or the outside span of pipe-arch. The dimensions shown as O.D. with 3' maximum shall be O.D. until O.D. equals 3', at which point 3' shall be used.

* 1' -0" for diameters 12" through 42" and spans through 50". 2' -0" for diameters greater than 42" and spans greater than 50".

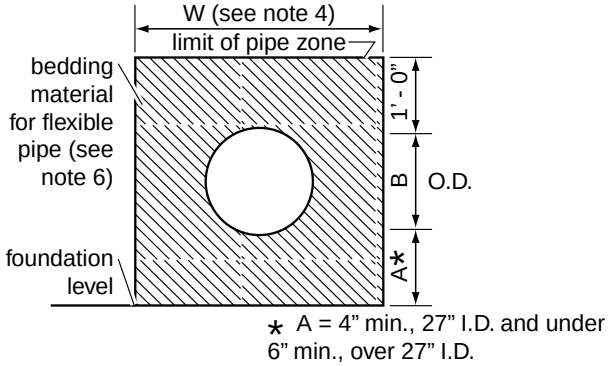

Bedding for Flexible Pipe

Flexible Pipe NOTES:

1. Provide uniform support under barrels.
2. Hand tamp under haunches.
3. Compact bedding material to 95% max. density; directly over pipe, hand tamp only.
4. See "Excavation and Preparation of Trench" in sanitary sewers section of the standard WSDOT/APWA specifications for trench width "W" and trenching options. The pipe zone will be the actual trench width. The minimum concrete width shall be 1 1/2 I.D. + 18".
5. Trench backfill shall conform to "Backfilling Sewer Trenches" in the sanitary sewers section of the WSDOT/APWA standard specifications, except that rocks or lumps larger than 1" per foot of pipe diameter shall not be used in the backfill material.
6. See "Bedding Material for Flexible Pipe" in aggregates section of the WSDOT/APWA standard specification for the material specifications.

DRAFT

Backfill material placed in 0.5' loose layers and compacted to 95% maximum density.

Method B or C compaction (WSDOT/APWA standard specifications.)

Pipe	Size	Min. dist. between barrels
circular pipe conc., LCPE, CMP (diameter)	12" to 24"	12"
	30" to 96"	diam. ÷ 2
	102" to 180"	48"
pipe - arch metal only (span)	18" to 36"	12"
	43" to 142"	span. ÷ 3
	148" to 199"	48"

FIGURE 4.2.1.B PIPE ANCHOR DETAIL

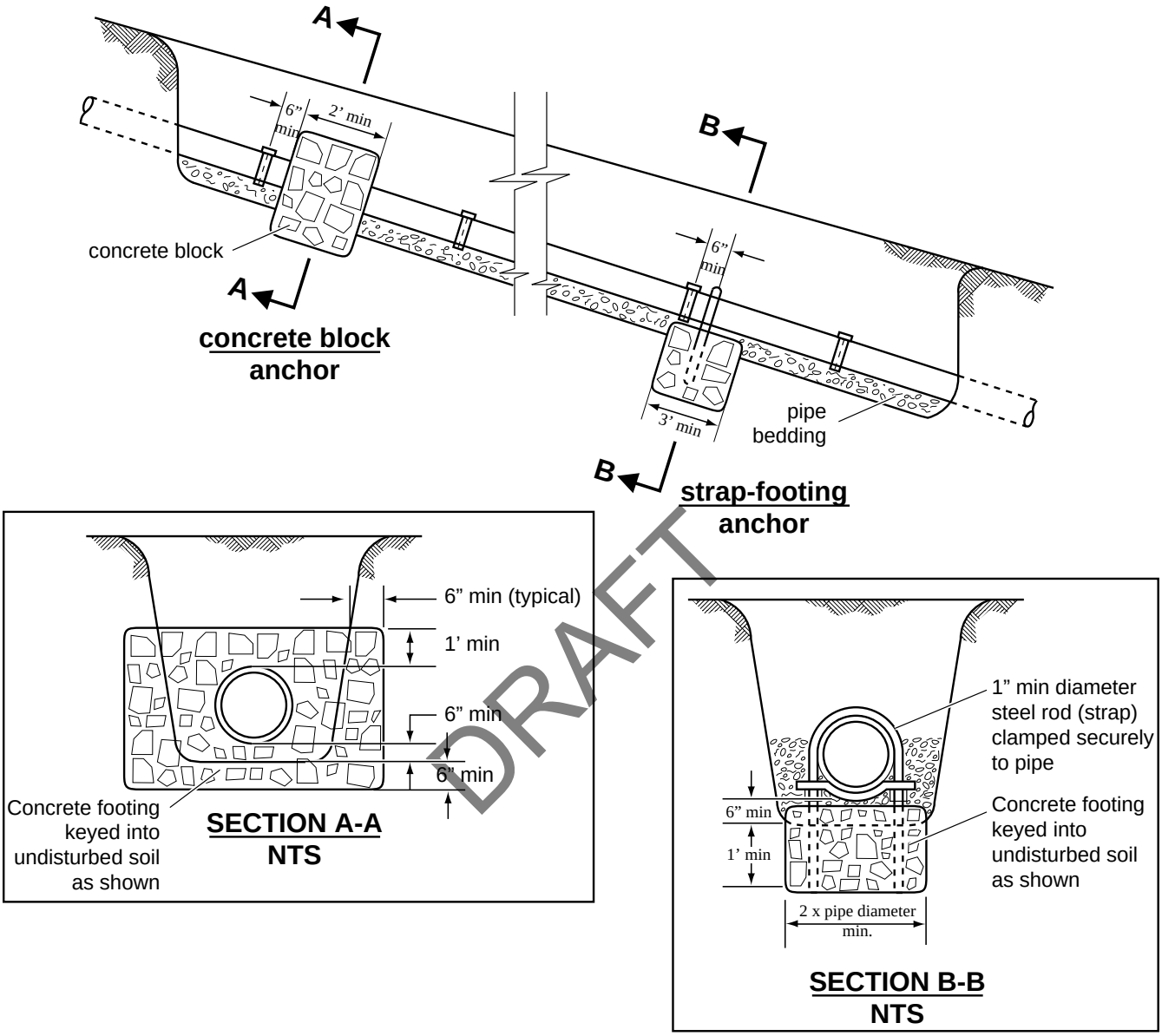

DRAFT

NOTE: For SWPE, pipe must be free to slide inside a 4' long section of pipe one size diameter larger.

FIGURE 4.2.1.C CORRUGATED METAL PIPE COUPLING AND/OR GENERAL PIPE ANCHOR ASSEMBLY

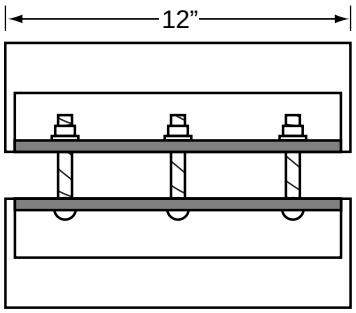

Smooth Coupling Band for Smooth Pipe

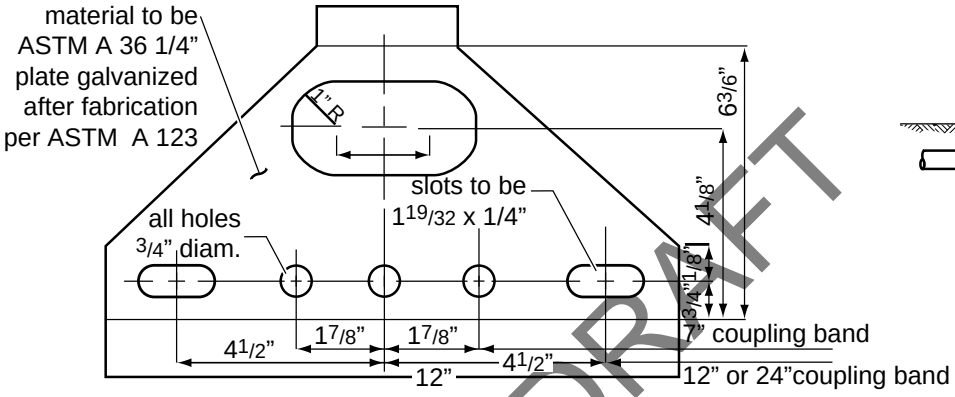

Plate Detail

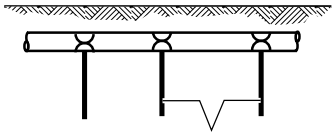

pipe stakes

DRAFT

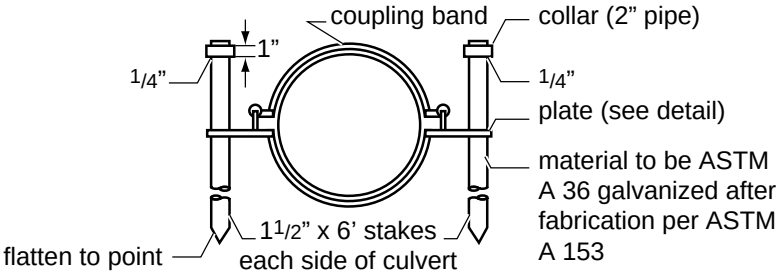

Anchor Assembly - Corrugated Metal Pipe

NOTES:

1. The smooth coupling band shall be used in combination with concrete pipe.
2. Concrete pipe without ball and spigot shall not be installed on grades in excess of 20%.
3. The first anchor shall be installed on the first section of the lower end of the pipe and remaining anchors evenly spaced throughout the installation.
4. If the pipe being installed has a manhole or catch basin on the lower end of the pipe, the first pipe anchor may be eliminated.
5. When CMP is used, the anchors may be attached to the coupling bands used to join the pipe as long as the specified spacing is not exceeded.
6. All pipe anchors shall be securely installed before backfilling around the pipe.

DRAFT

FIGURE 4.2.1.E DEBRIS BARRIER (IN ROAD RIGHT-OF-WAY)

NOTES:
1. CMP or LCPE pipe end-section shown; for concrete pipe beveled end section, see KCRS drawing No. 2-001.
2. All steel parts must be galvanized and asphalt coated (treatment 1 or better).

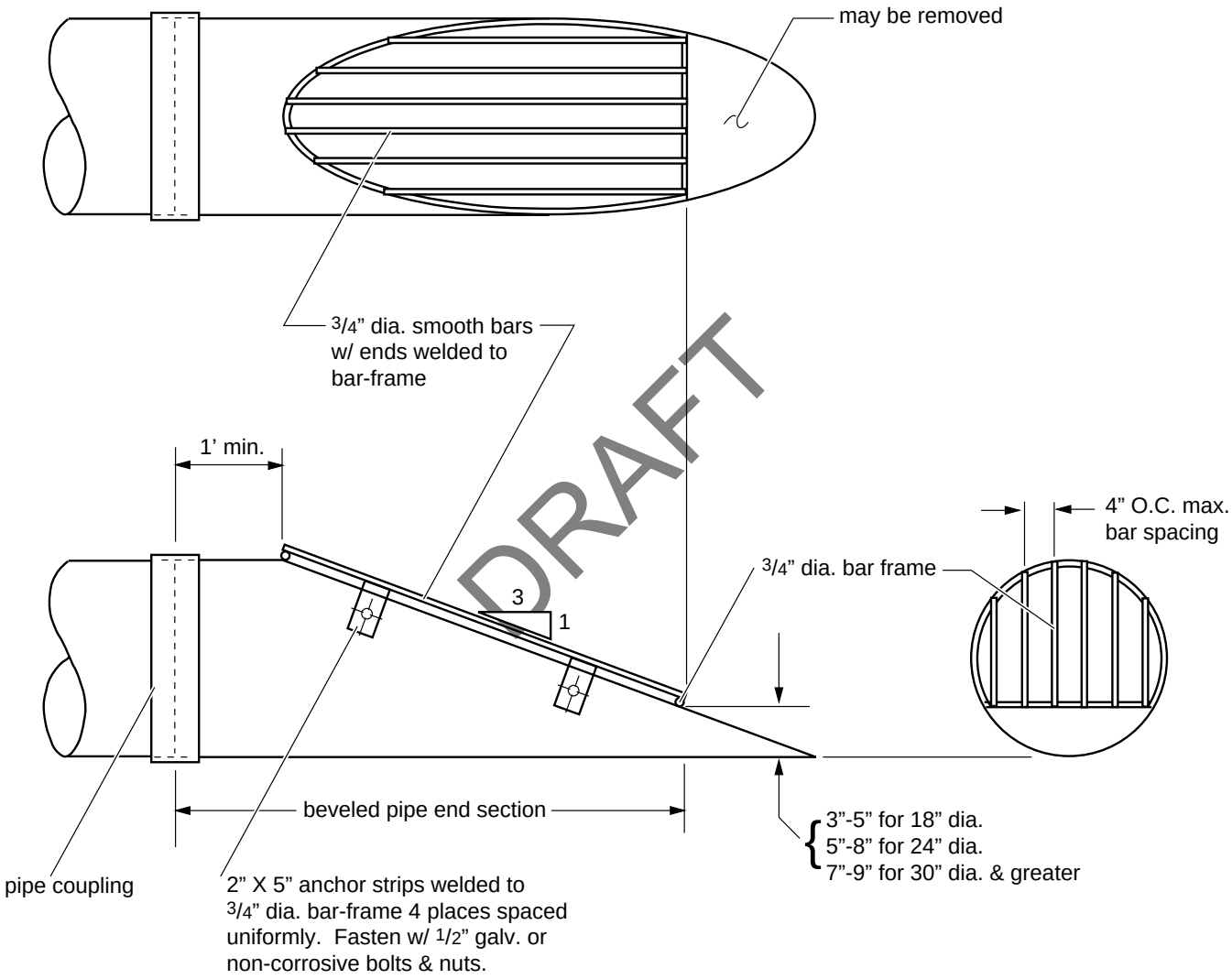

DRAFT

4.2.1.2 METHODS OF ANALYSIS

This section presents the methods of analysis for designing new or evaluating existing **pipe systems** for compliance with the conveyance capacity requirements set forth in Section 1.2.4, "Core Requirement #4: Conveyance System."

❑ DESIGN FLOWS

Design flows for sizing or assessing the capacity of pipe systems shall be determined using the hydrologic analysis methods described in Chapter 3.

❑ INLET GRATE CAPACITY

The methods described in Chapter 5, Sections 4 and 5, of the *Washington State Department of Transportation (WSDOT) Hydraulics Manual* may be used in determining the capacity of inlet grates when capacity is of concern, with the following exceptions:

1. Use design flows as required in Section 1.2.4 of this manual.
2. Assume grate areas on slopes are 80% free of debris; "vaned" grates, 95% free.
3. Assume grate areas in sags or low spots are 50% free of debris; "vaned" grates, 75% free.

❑ CONVEYANCE CAPACITY

Two methods of hydraulic analysis using Manning's equation are used sequentially for the design and analysis of pipe systems. First, the **Uniform Flow Analysis method** is used for the preliminary design of new pipe systems. Second, the **Backwater Analysis method** is used to analyze both proposed and existing pipe systems to verify adequate capacity. See Core Requirement #4, Section 1.2.4, for sizing requirements of pipe systems.

Note: Use of the Uniform Flow Analysis method to determine preliminary pipe sizes is only suggested as a first step in the design process and is not required. Results of the Backwater Analysis method determine final pipe sizes in all cases.

DRAFT

Uniform Flow Analysis Method

This method is used for **preliminary sizing** of new pipe systems to convey the *design flow* (i.e., the 10-year or 25-year peak flow rate as specified in Core Requirement #4, Section 1.2.4).

Assumptions:

- Flow is uniform in each pipe (i.e., depth and velocity remain constant throughout the pipe for a given flow).
- Friction head loss in the pipe barrel alone controls capacity. Other head losses (e.g., entrance, exit, junction, etc.) and any backwater effects or inlet control conditions are not specifically addressed.

Each pipe within the system is sized and sloped such that its **barrel capacity at normal full flow** (computed by Manning's equation) is equal to or greater than the design flow. The nomograph in Figure 4.2.1.F (p. 4-22) may be used for an approximate solution of Manning's equation. For more precise results, or for partial pipe full conditions, solve Manning's equation directly:

$$V = \frac{1.49}{n} R^{2/3} S^{1/2} \tag{4-1}$$

or use the continuity equation, $Q = AV$, such that:

$$Q = \frac{1.49}{n} A R^{2/3} S^{1/2} \tag{4-2}$$

where
- Q = discharge (cfs)
- V = velocity (fps)
- A = area (sf)
- n = Manning's roughness coefficient; see Table 4.2.1.D below
- R = hydraulic radius = area/wetted perimeter (ft)
- S = slope of the energy grade line (ft/ft)

For **pipes flowing partially full**, the actual velocity may be estimated from the hydraulic properties shown in Figure 4.2.1.G by calculating Q_{full} and V_{full} and using the ratio Q_{design}/Q_{full} to find V and d (depth of flow).

Table 4.2.1.D provides the recommended **Manning's "n" values for preliminary design** using the Uniform Flow Analysis method for pipe systems. *Note: The "n" values for this method are 15% higher in order to account for entrance, exit, junction, and bend head losses.*

DRAFT

TABLE 4.2.1.D MANNING'S "*n*" VALUES FOR PIPES

Type of Pipe Material	Analysis Method	
	Uniform Flow (Preliminary design)	Backwater Flow (Capacity Verification)
A. Concrete pipe and LCPE pipe	0.014	0.012
B. Annular Corrugated Metal Pipe or Pipe Arch:		
1. 2-$^2/_3$" x $^1/_2$" corrugation (riveted):		
a. plain or fully coated	0.028	0.024
b. paved invert (40% of circumference paved):		
1) flow at full depth	0.021	0.018
2) flow at 80% full depth	0.018	0.016
3) flow at 60% full depth	0.015	0.013
c. treatment 5	0.015	0.013
2. 3" x 1" corrugation	0.031	0.027
3. 6" x 2" corrugation (field bolted)	0.035	0.030
C. Helical 2-$^2/_3$" x $^1/_2$" corrugation and CPE pipe	0.028	0.024
D. Spiral rib metal pipe and PVC pipe	0.013	0.011
E. Ductile iron pipe cement lined	0.014	0.012
F. SWPE pipe (butt fused only)	0.009	0.009

Backwater Analysis Method

This method is used to analyze the capacity of both new and existing pipe systems to convey the required design flow (i.e., either the 10-year or 25-year peak flow, whichever is specified in Core Requirement #4, Section 1.2.4). In either case, pipe system structures must be demonstrated to contain the **headwater surface** (hydraulic grade line) for the specified peak flow rate. Structures may overtop for the 100-year peak flow as allowed by Core Requirement #4. When this occurs, the additional flow over the ground surface is analyzed using the methods for open channels described in Section 4.4.1.2 (p. 4-61) and added to the flow capacity of the pipe system.

This method is used to compute a **simple backwater profile** (hydraulic grade line) through a proposed or existing pipe system for the purposes of verifying adequate capacity. It incorporates a re-arranged form of Manning's equation expressed in terms of *friction slope* (slope of the energy grade line in ft/ft). The friction slope is used to determine the head loss in each pipe segment due to barrel friction, which can then be combined with other head losses to obtain water surface elevations at all structures along the pipe system.

The backwater analysis begins at the downstream end of the pipe system and is computed back through each pipe segment and structure upstream. The friction, entrance, and exit head losses computed for each pipe segment are added to that segment's tailwater elevation (the water surface elevation at the pipe's outlet) to obtain its **outlet control** headwater elevation. This elevation is then compared with the **inlet control** headwater elevation, computed assuming the pipe's inlet alone is controlling capacity using the methods for inlet control presented in Section 4.3.1.2 (p. 4-39). The condition that creates the highest headwater elevation determines the pipe's capacity. The approach velocity head is then subtracted from the controlling headwater elevation, and the junction and bend head losses are added to compute the total headwater elevation, which is then used as the tailwater elevation for the upstream pipe segment.

The **Backwater Calculation Sheet** in Figure 4.2.1.H (p. 4-24) may be used to compile the head losses and headwater elevations for each pipe segment. The numbered columns on this sheet are described in Figure 4.2.1.I (p. 4-25). An example calculation is performed in Figure 4.2.1.J (p. 4-26).

Note: This method should not be used to compute stage/discharge curves for level pool routing purposes. Instead, a more sophisticated backwater analysis using the computer software provided with this manual is recommended as described below.

DRAFT

Computer Applications

The **King County Backwater (KCBW) computer program** includes a subroutine **BWPIPE,** which may be used to quickly compute a family of backwater profiles for a given range of flows through a proposed or existing pipe system. A schematic description of the nomenclature used in this program is provided in Figure 4.3.1.G (p. 4-50). Program documentation providing instructions on the use of this and the other KCBW subroutines is available from DNRP.

FIGURE 4.2.1.F NOMOGRAPH FOR SIZING CIRCULAR DRAINS FLOWING FULL

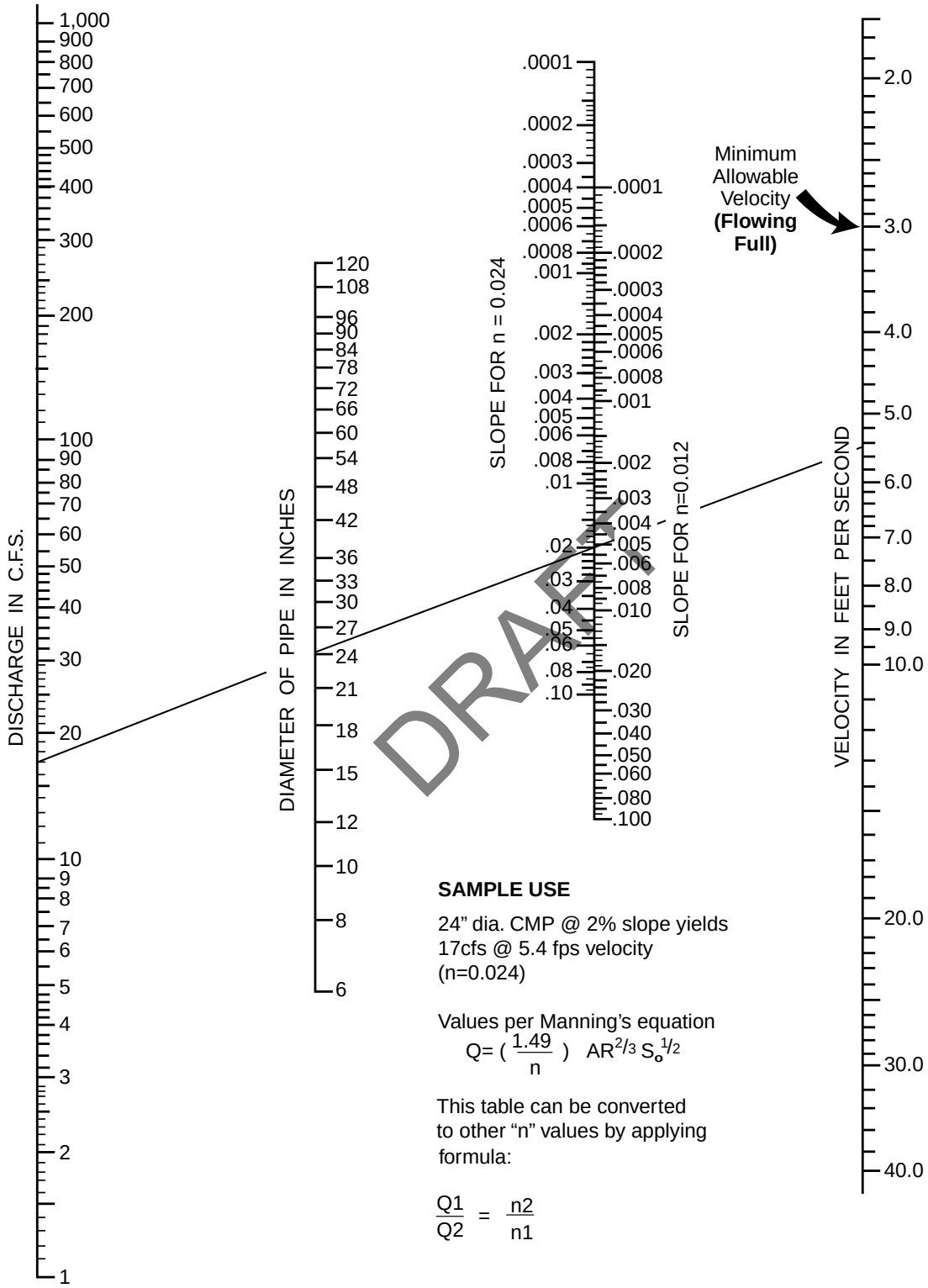

SAMPLE USE

24" dia. CMP @ 2% slope yields 17cfs @ 5.4 fps velocity (n=0.024)

Values per Manning's equation

$$Q = \left(\frac{1.49}{n}\right) AR^{2/3} S_o^{1/2}$$

This table can be converted to other "n" values by applying formula:

$$\frac{Q1}{Q2} = \frac{n2}{n1}$$

FIGURE 4.2.1.G CIRCULAR CHANNEL RATIOS

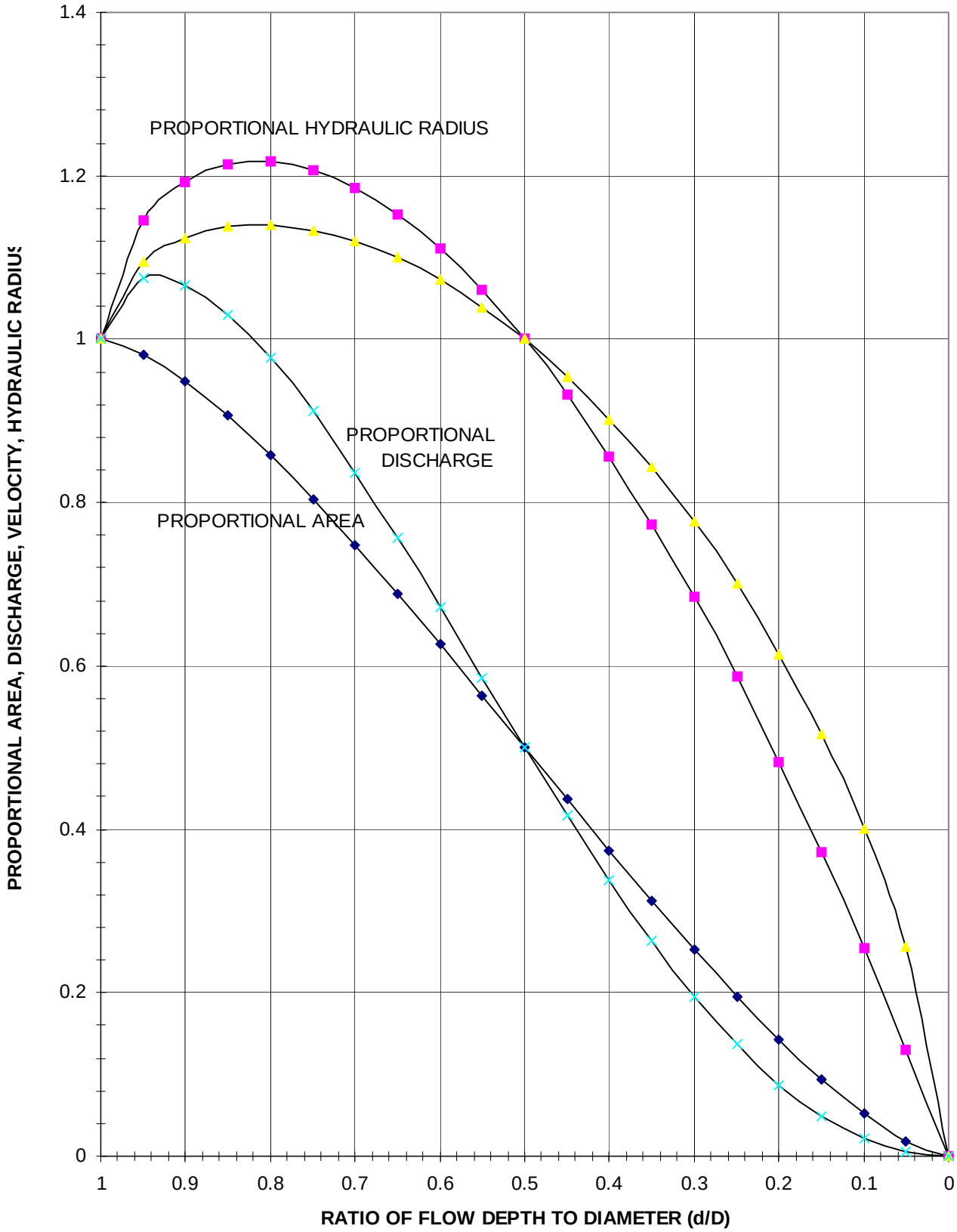

FIGURE 4.2.1.H BACKWATER CALCULATION SHEET

Pipe Segment CB to CB	(1) Q (cfs)	(2) Lngth (ft)	(3) Pipe Size	(4) "n" Value	(5) Outlet Elev (ft)	(6) Inlet Elev (ft)	(7) Barrel Area (sq. ft)	(8) Barrel Vel (fps)	(9) Barrel Vel Head (ft)	(10) TW Elev (ft)	(11) Fric-tion Loss (ft)	(12) Entr HGL Elev (ft)	(13) Entr Head Loss (ft)	(14) Exit Head Loss (ft)	(15) Outlt Cntrl Elev (ft)	(16) Inlet Cntrl Elev (ft)	(17) Appr Vel Head (ft)	(18) Bend Head Loss (ft)	(19) Junc Head Loss (ft)	(20) HW Elev (ft)

DRAFT

FIGURE 4.2.1.I BACKWATER CALCULATION SHEET NOTES

Column (1) - Design flow to be conveyed by pipe segment.
Column (2) - Length of pipe segment.

Column (3) - Pipe Size; indicate pipe diameter or span x rise.

Column (4) - Manning's "*n*" value.

Column (5) - Outlet Elevation of pipe segment.

Column (6) - Inlet Elevation of pipe segment.

Column (7) - Barrel Area; this is the full cross-sectional area of the pipe.

Column (8) - Barrel Velocity; this is the full velocity in the pipe as determined by:

$V = Q/A$ or Col.(8) = Col.(1) / Col.(7)

Column (9) - Barrel Velocity Head = $V^2/2g$ or $(\text{Col.}(8))^2/2g$

where $g = 32.2$ ft/sec^2 (acceleration due to gravity)

Column (10) - Tailwater (*TW*) Elevation; this is the water surface elevation at the outlet of the pipe segment. If the pipe's outlet is not submerged by the *TW* and the *TW* depth is less than $(D+d_c)/2$, set TW equal to $(D+d_c)/2$ to keep the analysis simple and still obtain reasonable results (D = pipe barrel height and d_c = critical depth, both in feet. See Figure 4.3.1.F (p. 4-49) for determination of d_c).

Column (11) - Friction Loss = $S_f \times L$ [or $S_f \times$ Col.(2)]
where S_f is the friction slope or head loss per linear foot of pipe as determined by Manning's equation expressed in the form:

$S_f = (nV)^2/2.22\,R^{1.33}$

Column (12) - Hydraulic Grade Line (HGL) Elevation just inside the entrance of the pipe barrel; this is determined by adding the friction loss to the *TW* elevation:

Col.(12) = Col.(11) + Col.(10)

If this elevation falls below the pipe's inlet crown, it no longer represents the true HGL when computed in this manner. The true HGL will fall somewhere between the pipe's crown and either normal flow depth or critical flow depth, whichever is greater. To keep the analysis simple and still obtain reasonable results (i.e., erring on the conservative side), set the HGL elevation equal to the crown elevation.

Column (13) - Entrance Head Loss = $K_e \times V^2/2g$ [or $K_e \times$ Col.(9)]
where K_e = Entrance Loss Coefficient (from Table 4.3.1.B, p. 4-42). This is the head lost due to flow contractions at the pipe entrance.

Column (14) - Exit Head Loss = $1.0 \times V^2/2g$ or $1.0 \times$ Col.(9)

This is the velocity head lost or transferred downstream.

Column (15) - Outlet Control Elevation = Col.(12) + Col.(13) + Col.(14)

This is the maximum headwater elevation assuming the pipe's barrel and inlet/outlet characteristics are controlling capacity. It does not include structure losses or approach velocity considerations.

Column (16) - Inlet Control Elevation (see Section 4.3.1.2, page 4-39, for computation of inlet control on culverts); this is the maximum headwater elevation assuming the pipe's inlet is controlling capacity. It does not include structure losses or approach velocity considerations.

Column (17) - Approach Velocity Head; this is the amount of head/energy being supplied by the discharge from an upstream pipe or channel section, which serves to reduce the headwater elevation. If the discharge is from a pipe, the approach velocity head is equal to the barrel velocity head computed for the upstream pipe. If the upstream pipe outlet is significantly higher in elevation (as in a drop manhole) or lower in elevation such that its discharge energy would be dissipated, an approach velocity head of zero should be assumed.

Column (18) - Bend Head Loss = $K_b \times V^2/2g$ [or $K_b \times$ Col.(17)]
where K_b = Bend Loss Coefficient (from Figure 4.2.1.K, p. 4-27). This is the loss of head/energy required to change direction of flow in an access structure.

Column (19) - Junction Head Loss. This is the loss in head/energy that results from the turbulence created when two or more streams are merged into one within the access structure. Figure 4.2.1.L (p. 4-28) may be used to determine this loss, or it may be computed using the following equations derived from Figure 4.2.1.L:

Junction Head Loss = $K_j \times V^2/2g$ [or $K_j \times$ Col.(17)]

where K_j is the Junction Loss Coefficient determined by:

$K_j = (Q_3/Q_1)/(1.18 + 0.63(Q_3/Q_1))$

Column (20) - Headwater (HW) Elevation; this is determined by combining the energy heads in Columns 17, 18, and 19 with the highest control elevation in either Column 15 or 16, as follows:

Col.(20) = Col.(15 or 16) - Col.(17) + Col.(18) + Col.(19)

DRAFT

FIGURE 4.2.1.J BACKWATER PIPE CALCULATION EXAMPLE

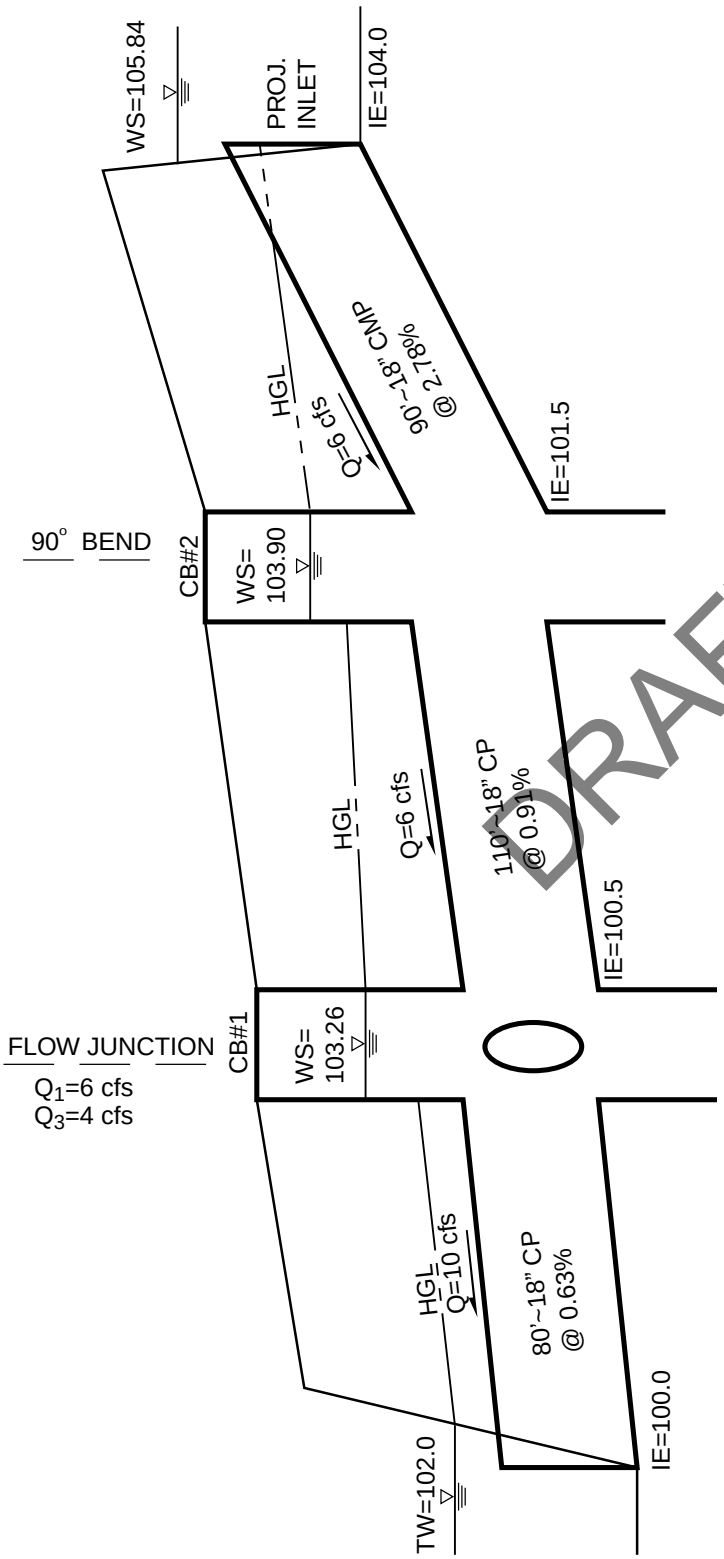

DRAFT

B A C K W A T E R C A L C U L A T I O N S H E E T

Select the greater elevation

Pipe Segment CB to CB	(1) Q (cfs)	(2) Length (ft)	(3) Pipe Size	(4) "n" Value	(5) Outlet Elev (ft)	(6) Intlet Elev (ft)	(7) Barrel Area (sqft)	(8) Barrel Vel (fps)	(9) Barrel Vel Head (ft)	(10) TW Elev (ft)	(11) Fric-tion Loss (ft)	(12) Entr HGL Elev (ft)	(13) Entr Head Loss (ft)	(14) Exit Head Loss (ft)	(15) Outlt Contr Elev (ft)	(16) Inlet Contr Elev (ft)	(17) Appr Vel Head (ft)	(18) Bend Head Loss (ft)	(19) Junc Head Loss (ft)	(20) HW Elev (ft)
Out fall	1	80	18"	0.012	100.00	100.50	1.77	5.65	0.50	102.00	0.62	102.62	0.25	0.50	103.37	102.75	-0.18	0.002	0.07	103.26
1	2	110	18"	0.012	100.50	101.50	1.77	3.39	0.18	103.26	0.31	103.57	0.09	0.18	103.84	102.95	-0.18	0.24	0.0	103.90
2	Inlet	90	18"	0.024	101.50	104.00	1.77	3.39	0.18	103.90	1.00	(104.9) 105.5	0.16	0.18	105.84	105.80	-0.0	0.0	0.0	105.84

FIGURE 4.2.1.K BEND HEAD LOSSES IN STRUCTURES

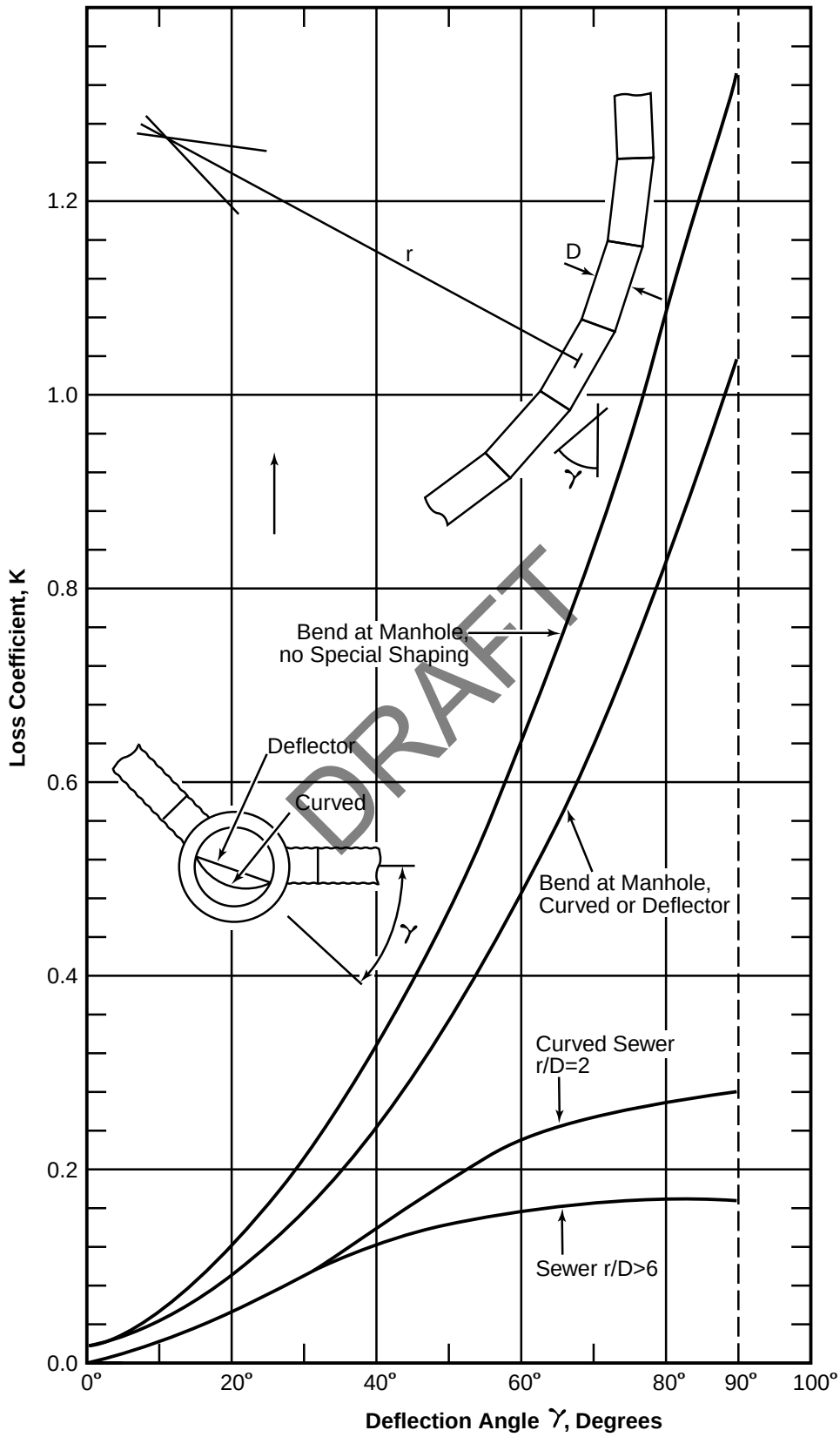

FIGURE 4.2.1.L JUNCTION HEAD LOSS IN STRUCTURES

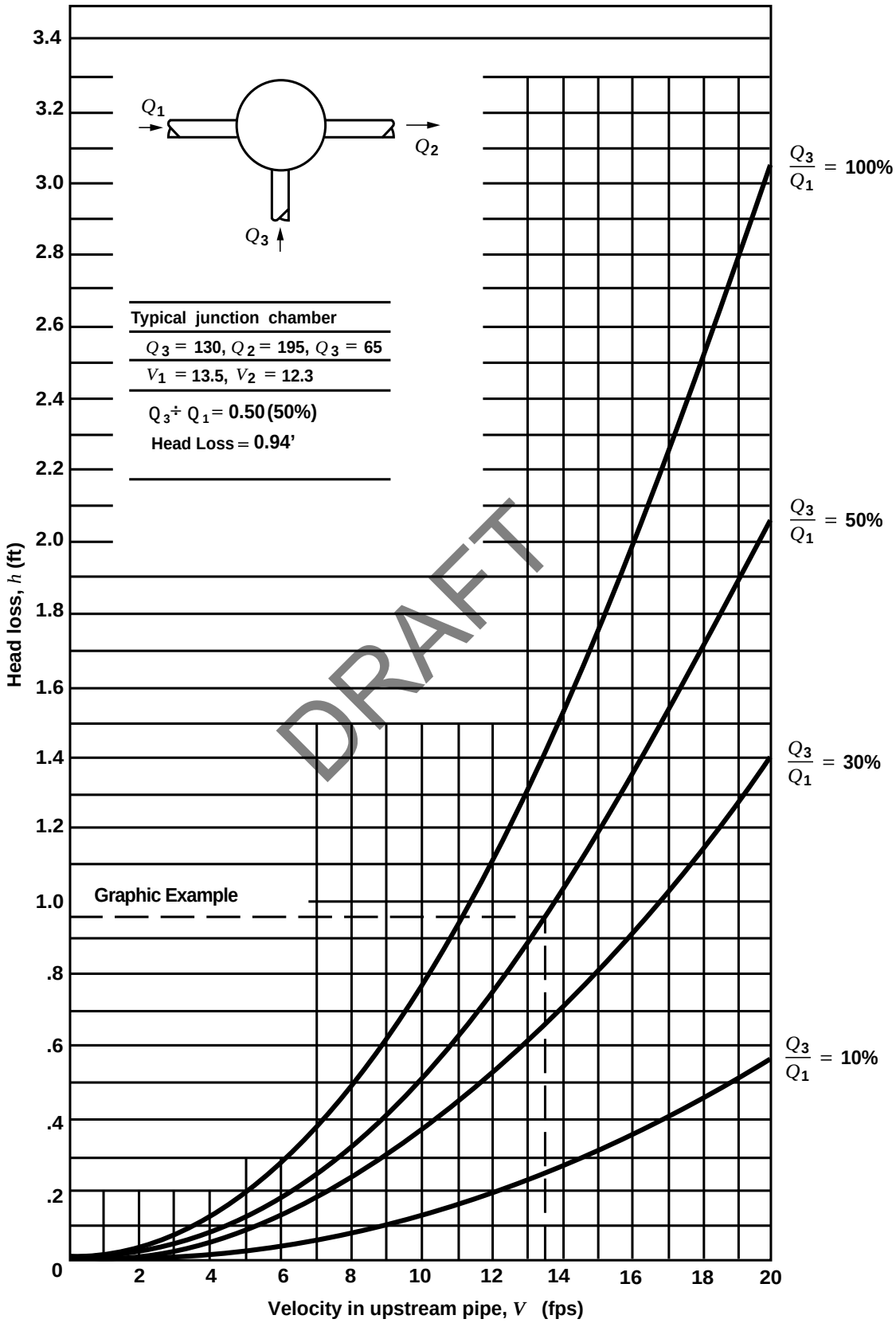

DRAFT

4.2.2 OUTFALL SYSTEMS

Properly designed outfalls are critical to ensuring no adverse impacts occur as the result of concentrated discharges from pipe systems and culverts, both onsite and downstream. *Outfall systems* include rock splash pads, flow dispersal trenches, gabion or other energy dissipaters, and tightline systems. A *tightline system* is typically a continuous length of pipe used to convey flows down a steep or sensitive slope with appropriate energy dissipation at the discharge end. In general, it is recommended that conveyance systems be designed to reduce velocity above outfalls to the extent feasible.

4.2.2.1 DESIGN CRITERIA

General

At a minimum, all outfalls shall be provided with a **rock splash pad** (see Figure 4.2.2.M, p. 4-32) except as specified below and in Table 4.2.2.A (p. 4-31):

1. The **flow dispersal trench** shown in Figure 4.2.2.N (p. 4-33) shall only be used as an outfall as described in Core Requirement #1, Section 1.2.1.
2. For outfalls with a velocity at design flow greater than 10 fps, a **gabion dissipater** or **engineered energy dissipater** shall be required. Note the gabion outfall detail shown in Figure 4.2.2.P (p. 4-35) is illustrative only; a design engineered to specific ***site*** conditions is required. Gabions shall conform to WDSOT/APWA specifications.
3. **Engineered energy dissipaters**, including stilling basins, drop pools, hydraulic jump basins, baffled aprons, and bucket aprons, are required for outfalls with velocity at design flow greater than 20 fps. These should be designed using published or commonly known techniques found in such references as *Hydraulic Design of Energy Dissipaters for Culverts and Channels*, published by the Federal Highway Administration of the United States Department of Transportation; *Open Channel Flow*, by V.T. Chow; *Hydraulic Design of Stilling Basins and Energy Dissipaters*, EM 25, Bureau of Reclamation (1978); and other publications, such as those prepared by the Soil Conservation Service (now Natural Resource Conservation Service). **Alternate mechanisms,** such as bubble-up structures (which will eventually drain) and structures fitted with reinforced concrete posts, may require an approved adjustment and must be designed using sound hydraulic principles and considering constructability and ease of maintenance.
4. **Tightline systems** shall be used when required by the discharge requirements of Core Requirement #1 or the outfall requirements of Core Requirement #4. Tightline systems may also be used to prevent aggravation or creation of a downstream erosion problem.
5. **Flood closure devices** shall be provided on new outfalls passing through existing levees or other features that contain floodwaters. Such structures shall be designed to the *Corps of Engineers Manual for Design and Construction of Levees* (EM 1110-2-1913).
6. **Backup (secondary gate) closure devices** shall be required for new outfalls through flood containment levees unless this requirement is specifically waived by the King County Water and Land Resources Division.
7. New **outfalls through levees along the Green River** between River Mile 6 and State Route 18 shall comply with the terms of the adopted *Lower Green River Pump Operation Procedures Plan*.

Tightline Systems

1. Outfall tightlines may be installed in trenches with standard bedding on **slopes up to 40%**. In order to minimize disturbance to **slopes greater than 40%**, it is recommended that tightlines be placed at grade with proper pipe anchorage and support.

DRAFT

2. SWPE tightlines must be designed to address the material limitations, particularly **thermal expansion and contraction** and pressure design, as specified by the manufacturer. The coefficient of thermal expansion and contraction for SWPE is on the order of 0.001 inch per foot per Fahrenheit degree. **Sliding sleeve connections** shall be used to address this thermal expansion and contraction. These sleeve connections consist of a section of the appropriate length of the next larger size diameter of pipe into which the outfall pipe is fitted. These sleeve connections must be located as close to the discharge end of the outfall system as is practical.
3. SWPE tightlines shall be designed and sized using the applicable design criteria and methods of analysis specified for pipe systems in Section 4.2.1, beginning on page 4-7.
4. Due to the ability of SWPE tightlines to transmit flows of very high energy, special consideration for **energy dissipation** must be made. Details of a sample "gabion mattress energy dissipater" have been provided as Figure 4.2.2.P (p. 4-35). Flows of very high energy will require a specifically engineered energy dissipater structure, as described above in General Criterion #3. *Caution, the in-stream sample gabion mattress energy dissipater may not be acceptable within the ordinary high water mark of fish-bearing waters or where gabions will be subject to abrasion from upstream channel sediments. A four-sided gabion basket located outside the ordinary high water mark should be considered for these applications.*

DRAFT

TABLE 4.2.2.A ROCK PROTECTION AT OUTFALLS

Discharge Velocity at Design Flow (fps)		REQUIRED PROTECTION				
Greater than	Less than or equal to	Minimum Dimensions[1]				
		Type	Thickness	Width	Length	Height
0	5	Rock lining[2]	1 foot	Diameter + 6 feet	8 feet or 4 x diameter, whichever is greater	Crown + 1 foot
5	10	Riprap[3]	2 feet	Diameter + 6 feet or 3 x diameter, whichever is greater	12 feet or 4 x diameter, whichever is greater	Crown + 1 foot
10	20	Gabion outfall	As required	As required	As required	Crown + 1 foot
20	N/A	Engineered energy dissipater required				

(1) These sizes assume that erosion is dominated by outfall energy. In many cases sizing will be governed by conditions in the receiving waters.

(2) **Rock lining** shall be quarry spalls with gradation as follows:

Passing 8-inch square sieve: 100%

Passing 3-inch square sieve: 40 to 60% maximum

Passing $^3/_4$-inch square sieve: 0 to 10% maximum

(3) **Riprap** shall be reasonably well graded with gradation as follows:

Maximum stone size: 24 inches (nominal diameter)

Median stone size: 16 inches

Minimum stone size: 4 inches

Note: Riprap sizing governed by side slopes on outlet channel is assumed to be approximately 3:1.

DRAFT

FIGURE 4.2.2.M PIPE/CULVERT DISCHARGE PROTECTION

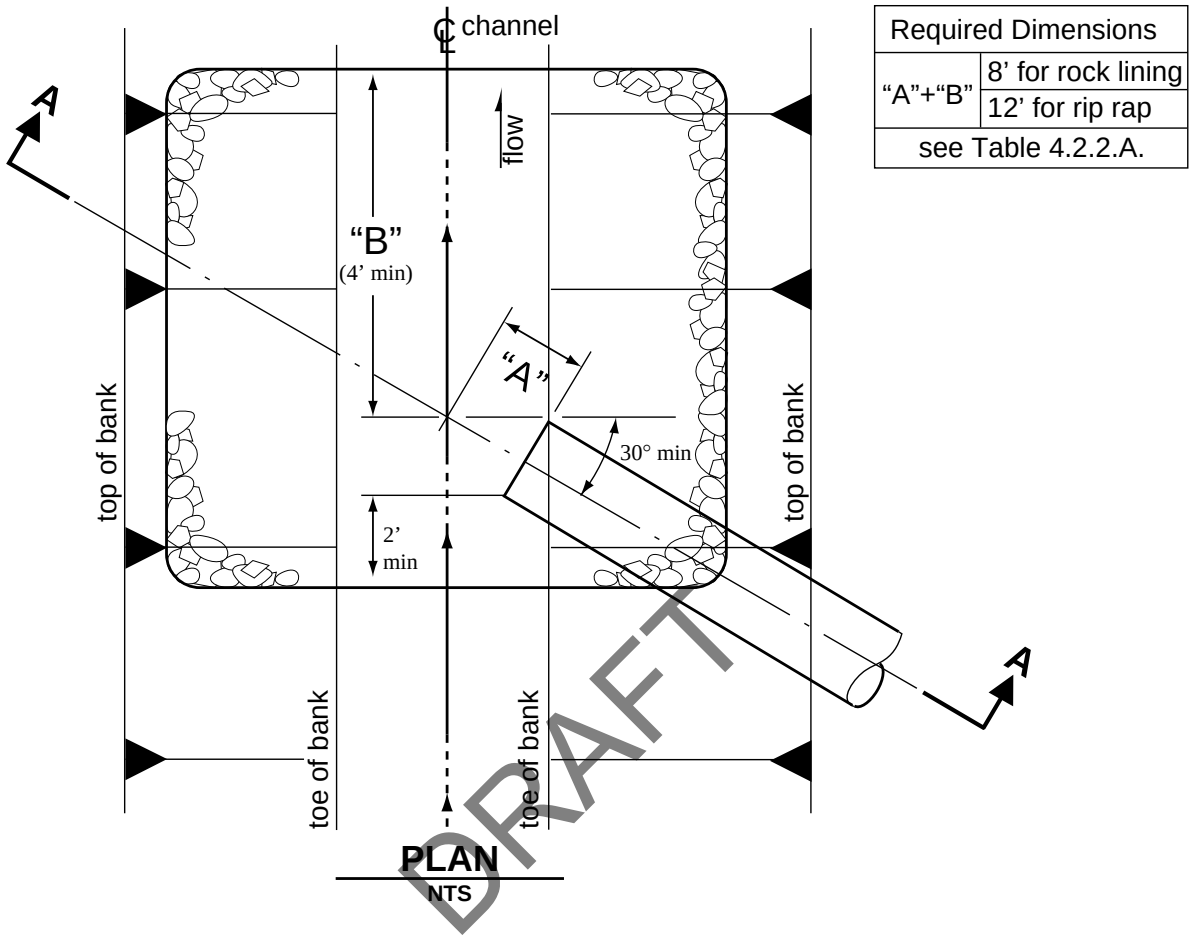

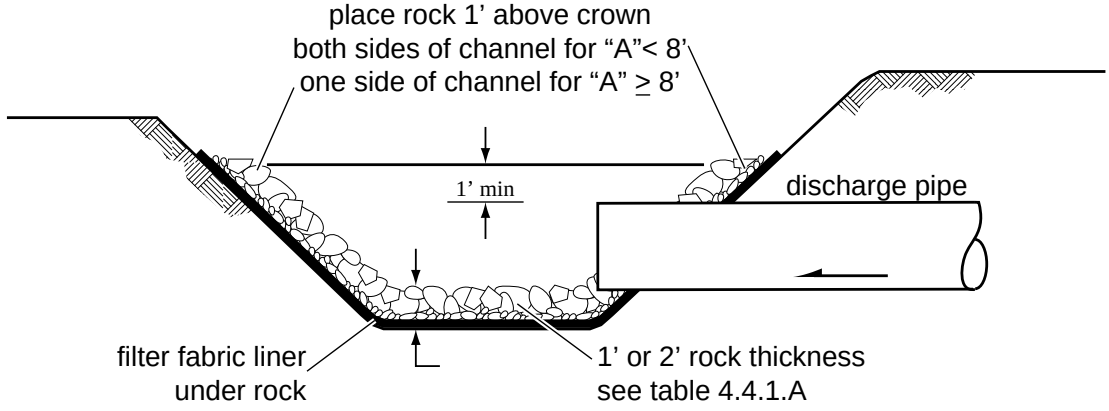

SECTION A-A
NTS

FIGURE 4.2.2.N FLOW DISPERSAL TRENCH

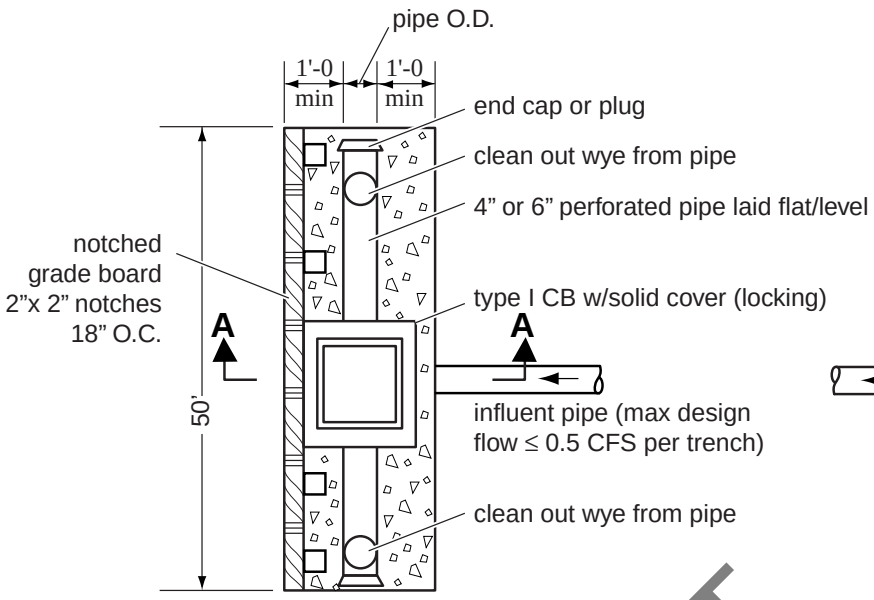

PLAN
NTS

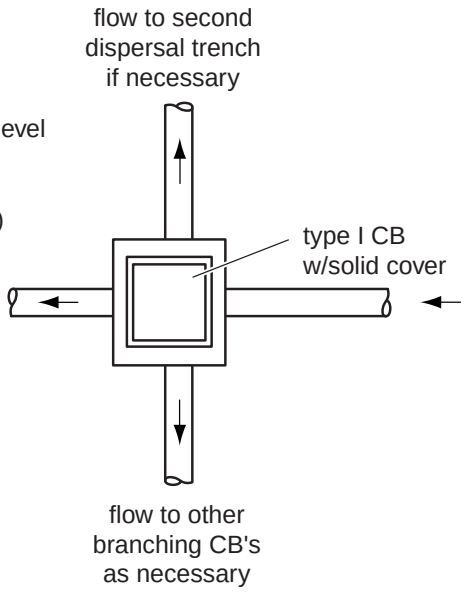

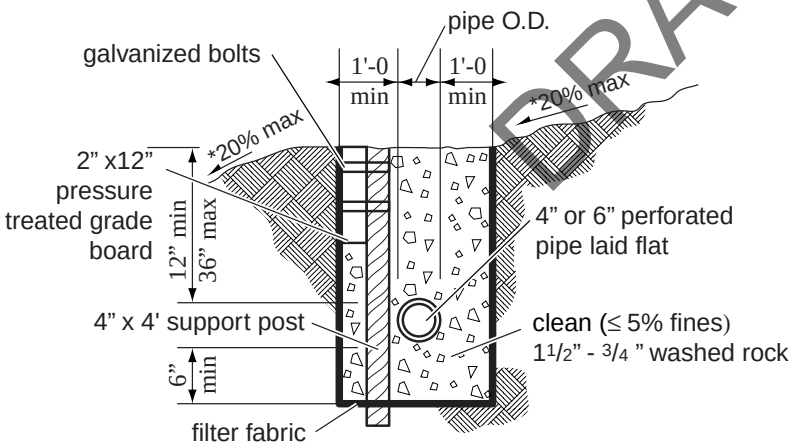

*15% max for flow control/water quality treatment in rural areas.

SECTION A-A
NTS

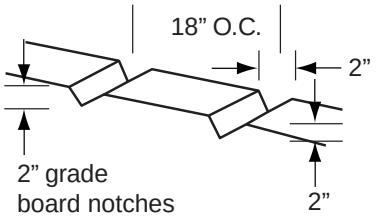

NOTES:

1. This trench shall be constructed so as to prevent point discharge and/or erosion.
2. Trenches may be placed no closer than 50 feet to one another. (100 feet along flowline)
3. Trench and grade board must be level. Align to follow contours of site.
4. Support post spacing as required by soil conditions to ensure grade board remains level.

DRAFT

FIGURE 4.2.2.O ALTERNATIVE FLOW DISPERSAL TRENCH

Grade board shall be designed per detail in Figure 4.2.2.C

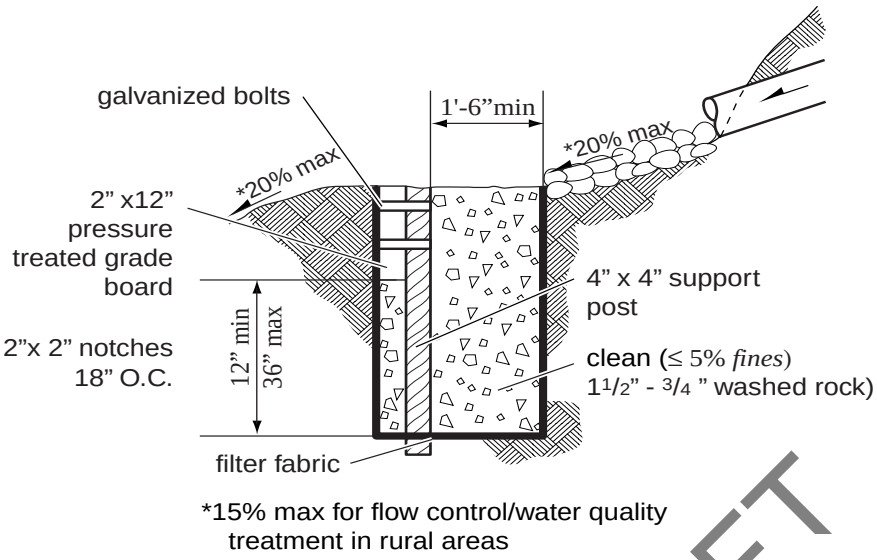

*15% max for flow control/water quality treatment in rural areas

SECTION A-A
NTS

NOTES:

1. This trench shall be constructed so as to prevent point discharge and/or erosion.
2. Trenches may be placed no closer than 50 feet to one another. (100 feet along flowline)
3. Trench and grade board must be level. Align to follow contours of site.
4. Support post spacing as required by soil conditions to ensure grade board remains level.

DRAFT

FIGURE 4.2.2.P GABION MATTRESS ENERGY DISSIPATOR DETAIL

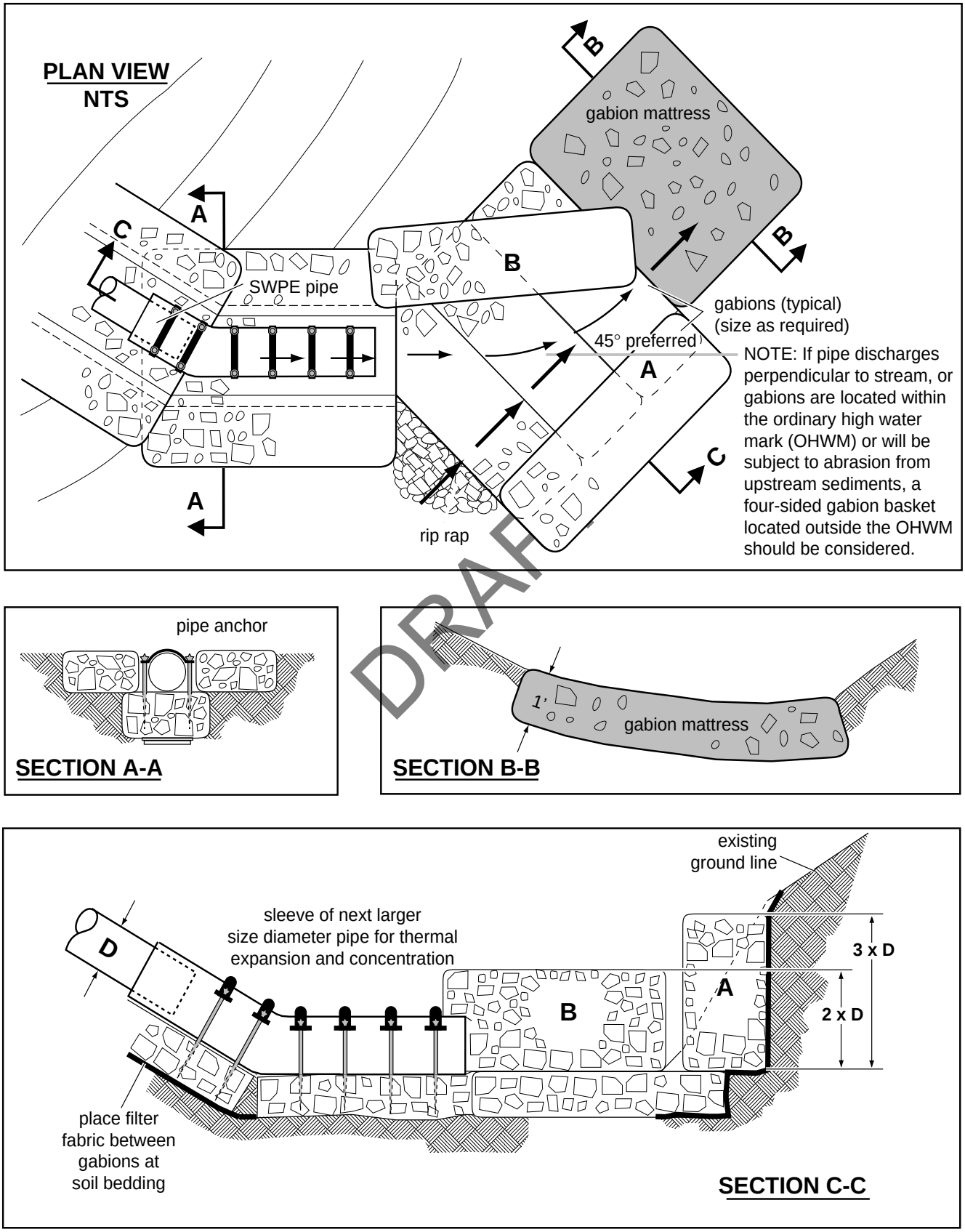

DRAFT

4.2.3 PUMP SYSTEMS

As allowed in Core Requirement #4, Section 1.2.4.3, pump systems may be used for conveyance of flows internal to a ***site*** if located on private property and privately maintained. Pump systems discharging to the Green river between River Mile 6 and State Route 18 (within the Green River Flood Control Zone District) shall comply with the standards of the adopted *Green River Pump Operation Procedures Plan*.

4.2.3.1 DESIGN CRITERIA

Proposed pump systems must meet the following minimum requirements:

1. The pump system must be **privately owned and maintained**.
2. The pump system shall be used to convey water from one location or elevation to another within the ***site***.
3. The pump system must have a dual pump (alternating) equipped with an external alarm system.
4. The pump system shall not be used to circumvent any other King County drainage requirements, and construction and operation of the pump system shall not violate any other King County requirements.
5. The gravity-flow components of the drainage system to and from the pump system must be designed so that pump failure does not result in flooding of a building or emergency access, or overflow to a location other than the ***natural discharge point*** for the ***site***.

4.2.3.2 METHODS OF ANALYSIS

Pump systems must be sized in accordance with the conveyance capacity requirements for pipe systems set forth in Section 1.2.4, "Core Requirement #4: Conveyance System."

DRAFT

4.3 CULVERTS AND BRIDGES

This section presents the methods, criteria, and details for hydraulic analysis and design of culverts and bridges. The information presented is organized as follows:

Section 4.3.1, "Culverts"
"Design Criteria," Section 4.3.1.1 (p. 4-37)
"Methods of Analysis," Section 4.3.1.2 (p. 4-39)

Section 4.3.2, "Culverts Providing for Fish Passage/Migration"
"Design Criteria," Section 4.3.2.1 (p. 4-51)
"Methods of Analysis," Section 4.3.2.2 (p. 4-52)

Section 4.3.3, "Bridges"
"Design Criteria," Section 4.3.3.1 (p. 4-53)
"Methods of Analysis," Section 4.3.3.2 (p. 4-54).

4.3.1 CULVERTS

Culverts are relatively short segments of pipe of circular, elliptical, rectangular, or arch cross section. They are usually placed under road embankments or driveways to convey surface water flow safely under the embankment. They may be used to convey flow from constructed or natural channels including streams. The Critical Areas Code (KCC 21A.24) contains definitions of streams (termed "aquatic areas") and requirements for crossing of streams. In addition to those requirements and the design criteria described below, other agencies such as the Washington State Department of Fish and Wildlife (WDFW) may have additional requirements affecting the design of proposed culverts.

DRAFT

4.3.1.1 DESIGN CRITERIA

General

1. All **circular pipe culverts** shall conform to any applicable design criteria specified for pipe systems in Section 4.2.1.
2. All **other types** of culverts shall conform to manufacturer's specifications. See the *King County Road Standards* and *General Special Provisions* for types of culverts allowed in King County right-of-way.

Headwater

1. For **culverts 18-inch diameter or less**, the maximum allowable headwater elevation (measured from the inlet invert) shall not exceed 2 times the pipe diameter or arch-culvert-rise at *design flow* (i.e., the 10-year or 25-year peak flow rate as specified in Core Requirement #4, Section 1.2.4).
2. For **culverts larger than 18-inch diameter,** the maximum allowable design flow headwater elevation (measured from the inlet invert) shall not exceed 1.5 times the pipe diameter or arch-culvert-rise at design flow.
3. The **maximum headwater elevation** at design flow shall be below any road or parking lot subgrade.

Inlets and Outlets

1. All inlets and outlets in or near roadway embankments must be flush with and conforming to the slope of the embankment.

2. For culverts 18-inch diameter and larger, the embankment around the culvert inlet shall be protected from erosion by **rock lining or riprap** as specified in Table 4.2.2.A (p. 4-31), except the length shall extend at least 5 feet upstream of the culvert, and the height shall be at or above the design headwater elevation.

   Inlet structures, such as concrete headwalls, may provide a more economical design by allowing the use of smaller entrance coefficients and, hence, smaller diameter culverts. When properly designed, they will also protect the embankment from erosion and eliminate the need for rock lining.

3. In order to maintain the stability of roadway embankments, concrete headwalls, wingwalls, or tapered inlets and outlets may be required if **right-of-way or easement constraints** prohibit the culvert from extending to the toe of the embankment slopes. All inlet structures or headwalls installed in or near roadway embankments must be flush with and conforming to the slope of the embankment.

4. **Debris barriers (trash racks)** are required on the inlets of all culverts that are over 60 feet in length and are 18 to 36 inches in diameter. Debris barriers shall have a bar spacing of 6 inches. This requirement also applies to the inlets of pipe systems. See Figure 4.2.1.D (p. 4-17) and Figure 4.2.1.E (p. 4-18) for debris barrier details.

5. For culverts 18-inch diameter and larger, the receiving channel of the outlet shall be protected from erosion by **rock lining** specified in Table 4.2.2.A (p. 4-31), except the height shall be one foot above maximum tailwater elevation or one foot above the crown, whichever is higher (See Figure 4.2.2.M, p. 4-32).

DRAFT

4.3.1.2 METHODS OF ANALYSIS

This section presents the methods of analysis for designing new or evaluating existing **culverts** for compliance with the conveyance capacity requirements set forth in Section 1.2.4, "Core Requirement #4: Conveyance System."

❑ DESIGN FLOWS

Design flows for sizing or assessing the capacity of culverts shall be determined using the hydrologic analysis methods described in Chapter 3.

❑ CONVEYANCE CAPACITY

The theoretical analysis of culvert capacity can be extremely complex because of the wide range of possible flow conditions that can occur due to various combinations of inlet and outlet submergence and flow regime within the culvert barrel. An exact analysis usually involves detailed backwater calculations, energy and momentum balance, and application of the results of hydraulic model studies.

However, simple procedures have been developed where the various flow conditions are classified and analyzed on the basis of a control section. A *control section* is a location where there is a unique relationship between the flow rate and the upstream water surface elevation. Many different flow conditions exist over time, but at any given time the flow is either governed by the culvert's inlet geometry (*inlet control*) or by a combination of inlet geometry, barrel characteristics, and tailwater elevation (*outlet control*). Figure 4.3.1.A (p. 4-44) illustrates typical conditions of inlet and outlet control. The procedures presented in this section provide for the analysis of both inlet and outlet control conditions to determine which governs.

DRAFT

Inlet Control Analysis

Nomographs such as those provided in Figure 4.3.1.B (p. 4-45) and Figure 4.3.1.C (p. 4-46) may be used to determine the **inlet control headwater depth** at design flow for various types of culverts and inlet configurations. These nomographs were originally developed by the Bureau of Public Roads—now the Federal Highway Administration (FHWA)—based on their studies of culvert hydraulics. These and other nomographs can be found in the FHWA publication *Hydraulic Design of Highway Culverts, HDS No. #5 (Report No. FHWA-IP-85-15)*, September 1985; or the *WSDOT Hydraulic Manual*.

Also available in the FHWA publication, are the design equations used to develop the inlet control nomographs. These equations are presented below.

For **unsubmerged** inlet conditions (defined by $Q/AD^{0.5} \leq 3.5$);

$$\text{Form 1*:}\quad HW/D = H_c/D + K(Q/AD^{0.5})^M - 0.5S^{**} \qquad (4\text{-}3)$$

$$\text{Form 2*:}\quad HW/D = K(Q/AD^{0.5})^M \qquad (4\text{-}4)$$

For **submerged** inlet conditions (defined by $Q/AD^{0.5} \geq 4.0$);

$$HW/D = c(Q/AD^{0.5})^2 + Y - 0.5S^{**} \qquad (4\text{-}5)$$

where
- HW = headwater depth above inlet invert (ft)
- D = interior height of culvert barrel (ft)
- H_c = specific head (ft) at critical depth ($dc + Vc_2/2g$)
- Q = flow (cfs)
- A = full cross-sectional area of culvert barrel (sf)

S = culvert barrel slope (ft/ft)
K,M,c,Y = constants from Table 4.3.1.A.

The specified head H_c is determined by the following equation:

$$H_c = d_c + V_c^2/2g \qquad (4\text{-}6)$$

where d_c = critical depth (ft); see Figure 4.3.1.F (p. 4-49)
V_c = flow velocity at critical depth (fps)
g = acceleration due to gravity (32.2 ft/sec^2).

* The appropriate equation form for various inlet types is specified in Table 4.3.1.A (p. 4-40

** For mitered inlets, use +0.7*S* instead of -0.5*S*.

Note: Between the unsubmerged and submerged conditions, there is a transition zone ($3.5 < Q/AD^{0.5} < 4.0$) for which there is only limited hydraulic study information. The transition zone is defined empirically by drawing a curve between and tangent to the curves defined by the unsubmerged and submerged equations. In most cases, the transition zone is short and the curve is easily constructed.

TABLE 4.3.1.A CONSTANTS FOR INLET CONTROL EQUATIONS*

Shape and Material	Inlet Edge Description	Unsubmerged			Submerged	
		Equation Form	*K*	*M*	*c*	*Y*
Circular Concrete	Square edge with headwall	1	0.0098	2.0	0.0398	0.67
	Groove end with headwall		0.0078	2.0	0.0292	0.74
	Groove end projecting		0.0045	2.0	0.0317	0.69
Circular CMP	Headwall	1	0.0078	2.0	0.0379	0.69
	Mitered to slope		0.0210	1.33	0.0463	0.75
	Projecting		0.0340	1.50	0.0553	0.54
Rectangular Box	30° to 75° wingwall flares	1	0.026	1.0	0.0385	0.81
	90° and 15° wingwall flares		0.061	0.75	0.0400	0.80
	0° wingwall flares		0.061	0.75	0.0423	0.82
CM Boxes	90° headwall	1	0.0083	2.0	0.0379	0.69
	Thick wall projecting		0.0145	1.75	0.0419	0.64
	Thin wall projecting		0.0340	1.5	0.0496	0.57
Arch CMP	90° headwall	1	0.0083	2.0	0.0496	0.57
	Mitered to slope		0.0300	1.0	0.0463	0.75
	Projecting		0.0340	1.5	0.0496	0.53
Bottomless Arch CMP	90° headwall	1	0.0083	2.0	0.0379	0.69
	Mitered to slope		0.0300	2.0	0.0463	0.75
	Thin wall projecting		0.0340	1.5	0.0496	0.57
Circular with Tapered Inlet	Smooth tapered inlet throat	2	0.534	0.333	0.0196	0.89
	Rough tapered inlet throat		0.519	0.64	0.0289	0.90

* Source: *FHWA HDS No. 5*

DRAFT

Outlet Control Analysis

Nomographs such as those provided in Figure 4.3.1.D (p. 4-47) and Figure 4.3.1.E (p. 4-48) may be used to determine the **outlet control headwater depth** at design flow for various types of culverts and inlets. Outlet control nomographs other than those provided can be found in *FHWA HDS No.5* or the *WSDOT Hydraulic Manual*.

The outlet control headwater depth may also be determined using the simple Backwater Analysis method presented in Section 4.2.1.2 (p. 4-21) for analyzing pipe system capacity. This procedure is summarized as follows for culverts:

$$HW = H + TW - LS \qquad (4\text{-}7)$$

where $H = H_f + H_e + H_{ex}$

H_f = friction loss (ft) = $(V^2 n^2 L)/(2.22R^{1.33})$
Note: If (Hf+TW-LS) < D, adjust Hf such that (Hf+TW-LS) = D. This will keep the analysis simple and still yield reasonable results (erring on the conservative side).

H_e = entrance head loss (ft) = $K_e(V^2/2g)$

H_{ex} = exit head loss (ft) = $V^2/2g$

TW = tailwater depth above invert of culvert outlet (ft)
Note: If $TW < (D+d_c)/2$, set $TW = (D+d_c)/2$. This will keep the analysis simple and still yield reasonable results.

L = length of culvert (ft)

S = slope of culvert barrel (ft/ft)

D = interior height of culvert barrel (ft)

V = barrel velocity (fps)

n = Manning's roughness coefficient from Table 4.2.1.D (p. 4-20)

R = hydraulic radius (ft)

K_e = entrance loss coefficient (from Table 4.3.1.B, p. 4-42)

g = acceleration due to gravity (32.2 ft/sec^2)

d_c = critical depth (ft); see Figure 4.3.1.F (p. 4-49)

Note: The above procedure should not be used to develop stage/discharge curves for level pool routing purposes because its results are not precise for flow conditions where the hydraulic grade line falls significantly below the culvert crown (i.e., less than full flow conditions).

DRAFT

TABLE 4.3.1.B ENTRANCE LOSS COEFFICIENTS	
Type of Structure and Design Entrance	**Coefficient, K_e**
Pipe, Concrete, PVC, Spiral Rib, DI, and LCPE	
Projecting from fill, socket (bell) end	0.2
Projecting from fill, square cut end	0.5
Headwall, or headwall and wingwalls	
Socket end of pipe (groove-end)	0.2
Square-edge	0.5
Rounded (radius = $^1/_{12}$D)	0.2
Mitered to conform to fill slope	0.7
End section conforming to fill slope*	0.5
Beveled edges, 33.7^o or 45° bevels	0.2
Side- or slope-tapered inlet	0.2
Pipe, or Pipe-Arch, Corrugated Metal and Other Non-Concrete or D.I.	
Projecting from fill (no headwall)	0.9
Headwall, or headwall and wingwalls (square-edge)	0.5
Mitered to conform to fill slope (paved or unpaved slope)	0.7
End section conforming to fill slope*	0.5
Beveled edges, 33.7^o or 45° bevels	0.2
Side- or slope-tapered inlet	0.2
Box, Reinforced Concrete	
Headwall parallel to embankment (no wingwalls)	
Square-edged on 3 edges	0.5
Rounded on 3 edges to radius of $^1/_{12}$ barrel dimension or beveled edges on 3 sides	0.2
Wingwalls at 30° to 75° to barrel	
Square-edged at crown	0.4
Crown edge rounded to radius of $^1/_{12}$ barrel dimension or beveled top edge	0.2
Wingwall at 10° to 25° to barrel	
Square-edged at crown	0.5
Wingwalls parallel (extension of sides)	
Square-edged at crown	0.7
Side- or slope-tapered inlet	0.2

* *Note: "End section conforming to fill slope" are the sections commonly available from manufacturers. From limited hydraulic tests they are equivalent in operation to a headwall in both* ***inlet and outlet control****. Some end sections incorporating a* ***closed taper*** *in their design have a superior hydraulic performance.*

DRAFT

Computer Applications

The "King County Backwater" (KCBW) computer program available with this manual contains two subroutines (**BWPIPE** and **BWCULV**) that may be used to analyze culvert capacity and develop stage/discharge curves for level pool routing purposes. A schematic description of the nomenclature used in these subroutines is provided in Figure 4.3.1.G (p. 4-50). The KCBW program documentation available from DNRP includes more detailed descriptions of program features.

DRAFT

FIGURE 4.3.1.A INLET/OUTLET CONTROL CONDITIONS

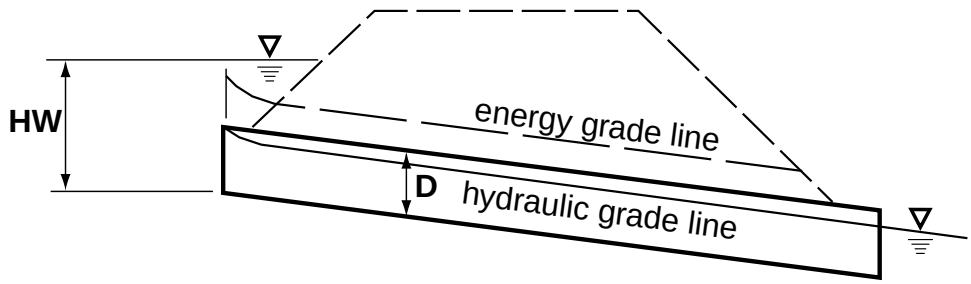

Inlet Control - Submerged Inlet

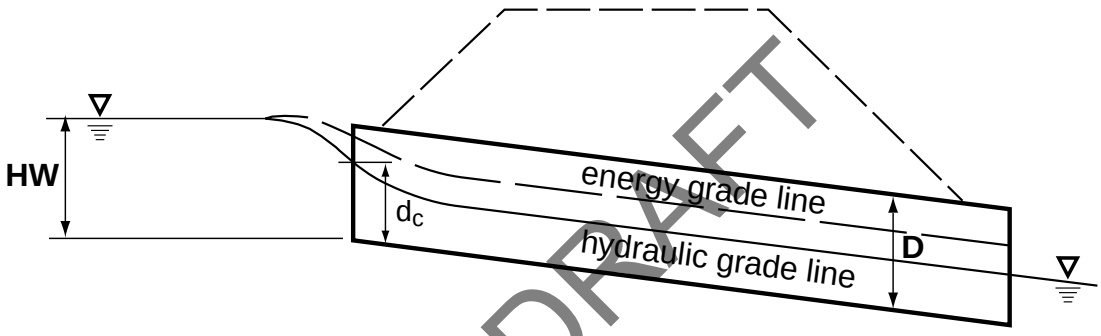

DRAFT

Inlet Control - Unsubmerged Inlet

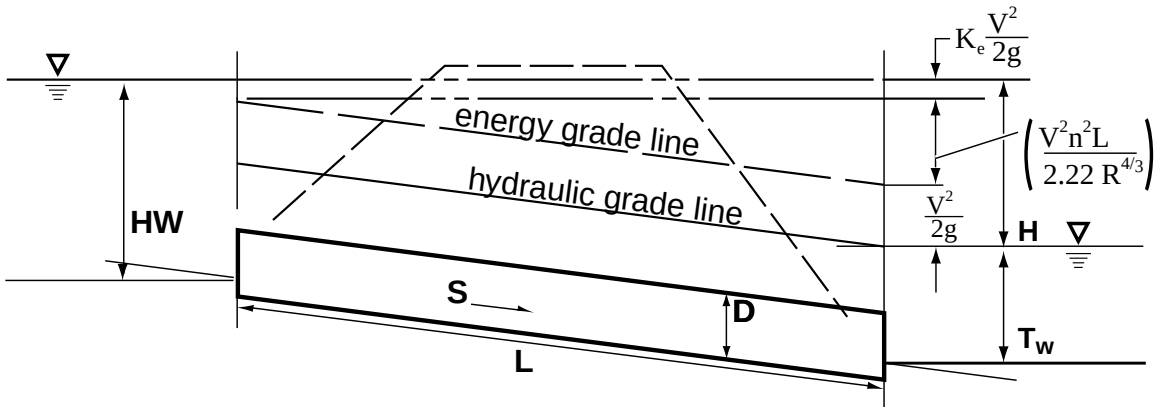

Outlet Control - Submerged Inlet and Outlet

NOTE: See FHWA no. 5 for other possible conditions

FIGURE 4.3.1.B
HEADWATER DEPTH FOR SMOOTH INTERIOR PIPE CULVERTS WITH INLET CONTROL

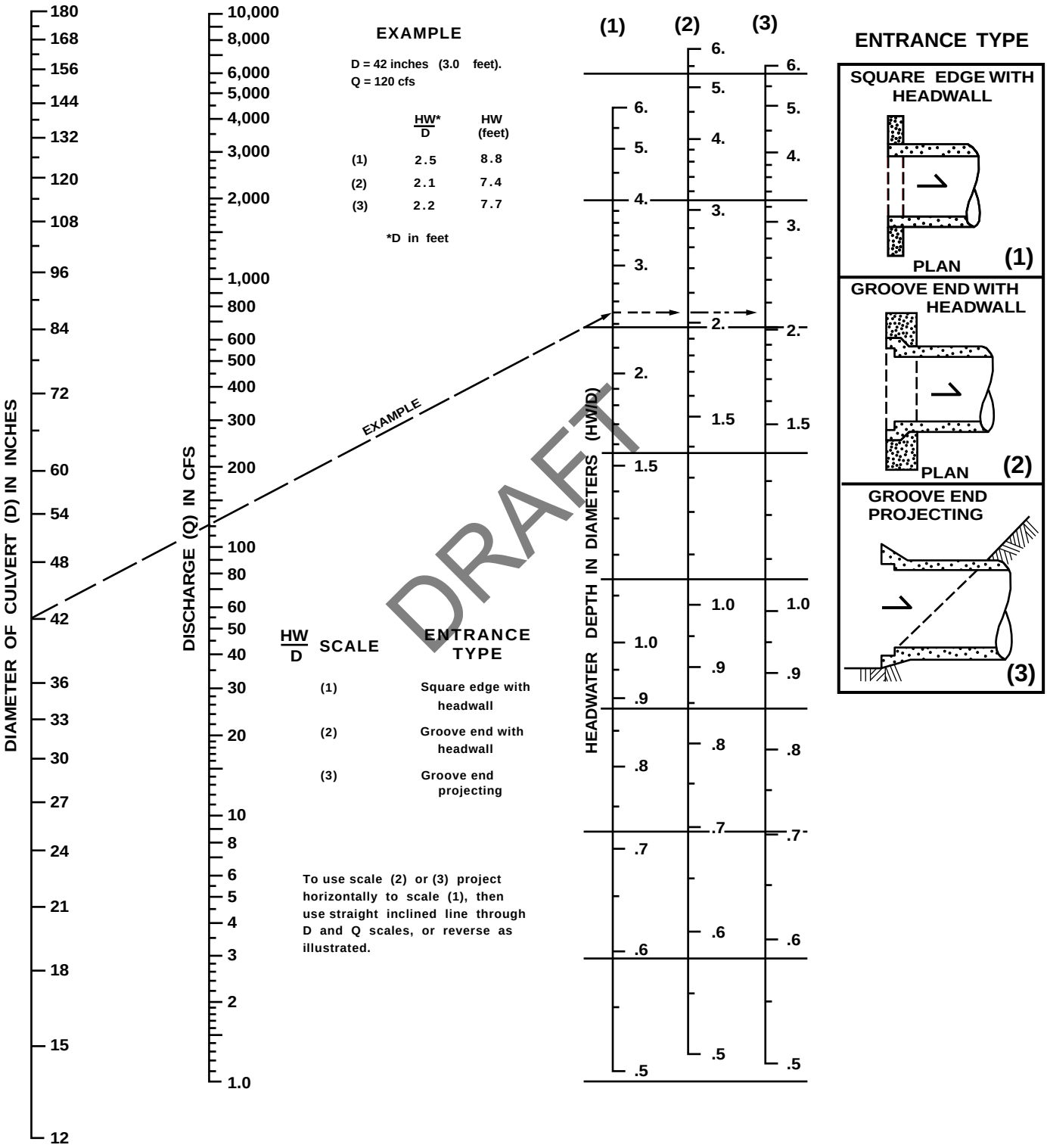

FIGURE 4.3.1.C HEADWATER DEPTH FOR CORRUGATED PIPE CULVERTS WITH INLET CONTROL

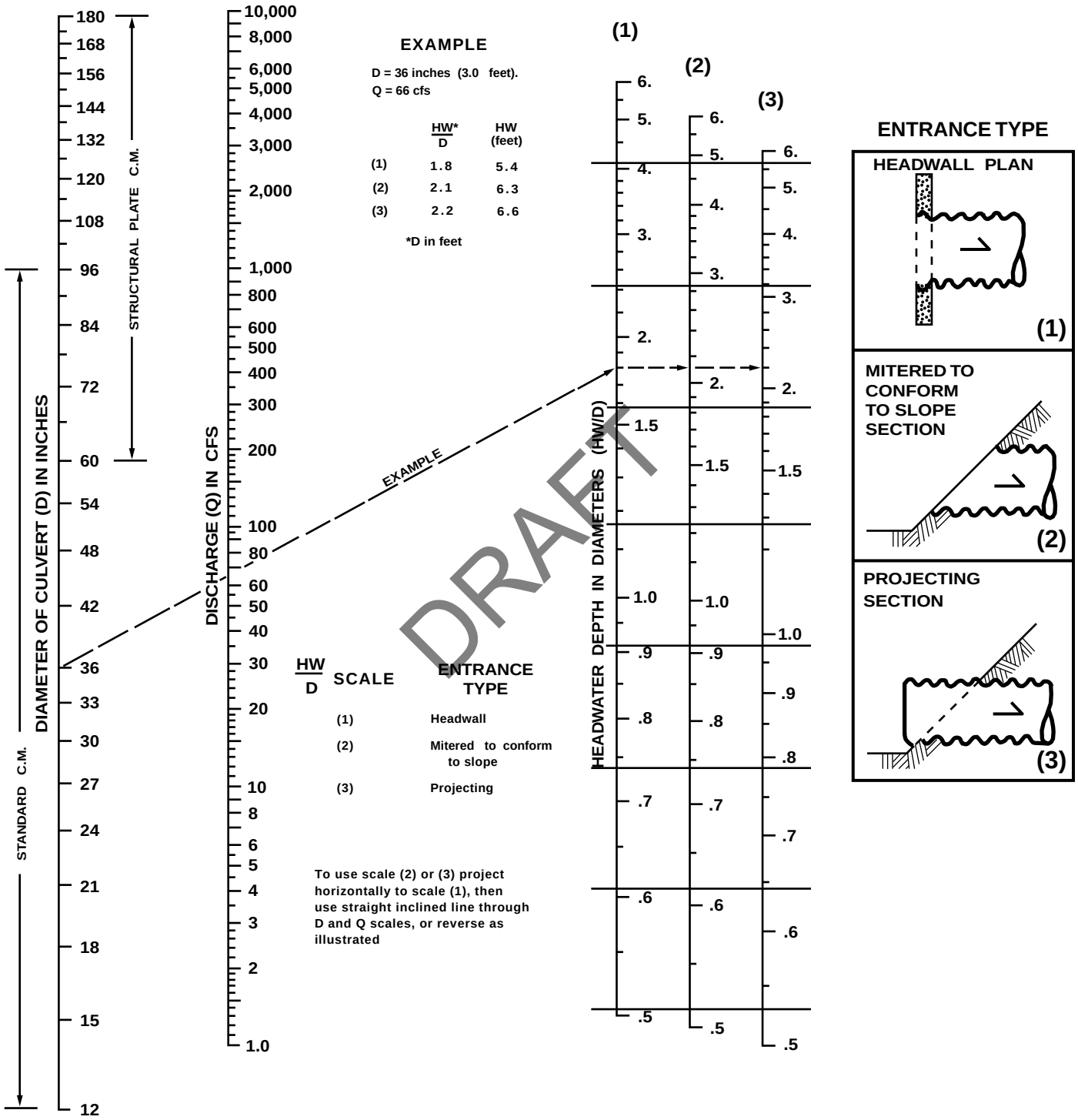

DRAFT

FIGURE 4.3.1.D HEAD FOR CULVERTS (PIPE W/"*n*"= 0.012) FLOWING FULL WITH OUTLET CONTROL

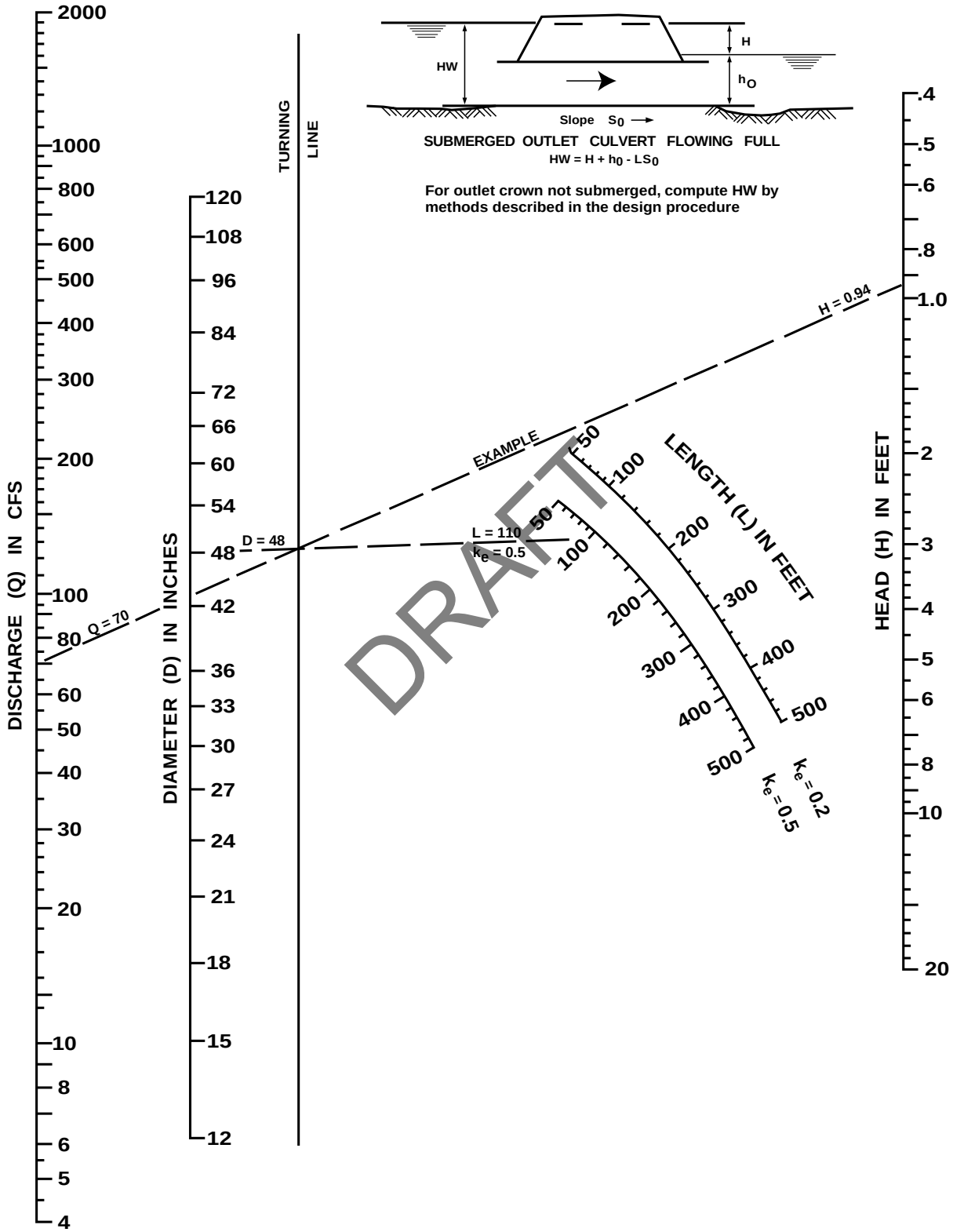

FIGURE 4.3.1.E HEAD FOR CULVERTS (PIPE W/"*n*"= 0.024) FLOWING FULL WITH OUTLET CONTROL

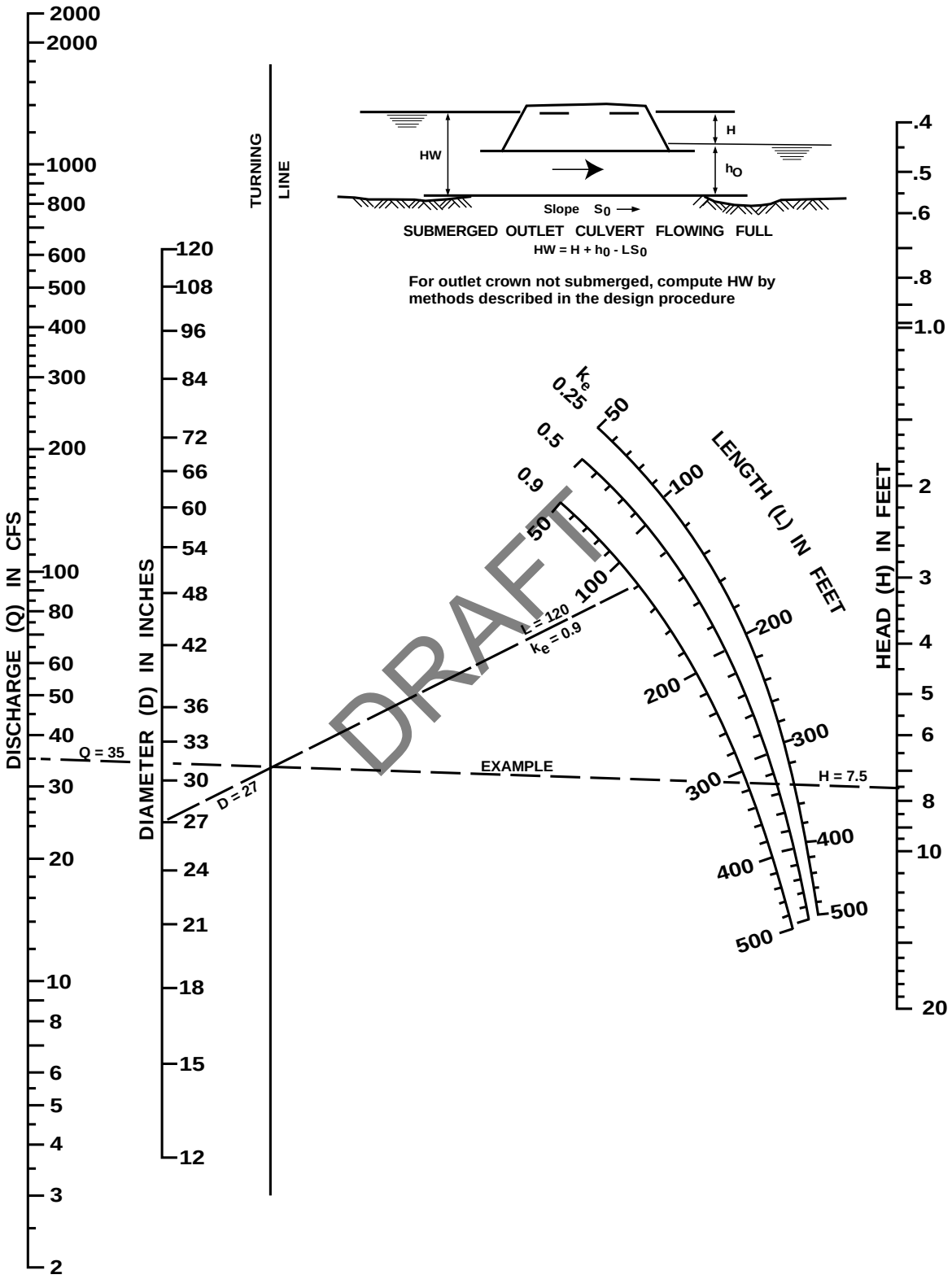

FIGURE 4.3.1.F CRITICAL DEPTH OF FLOW FOR CIRCULAR CULVERTS

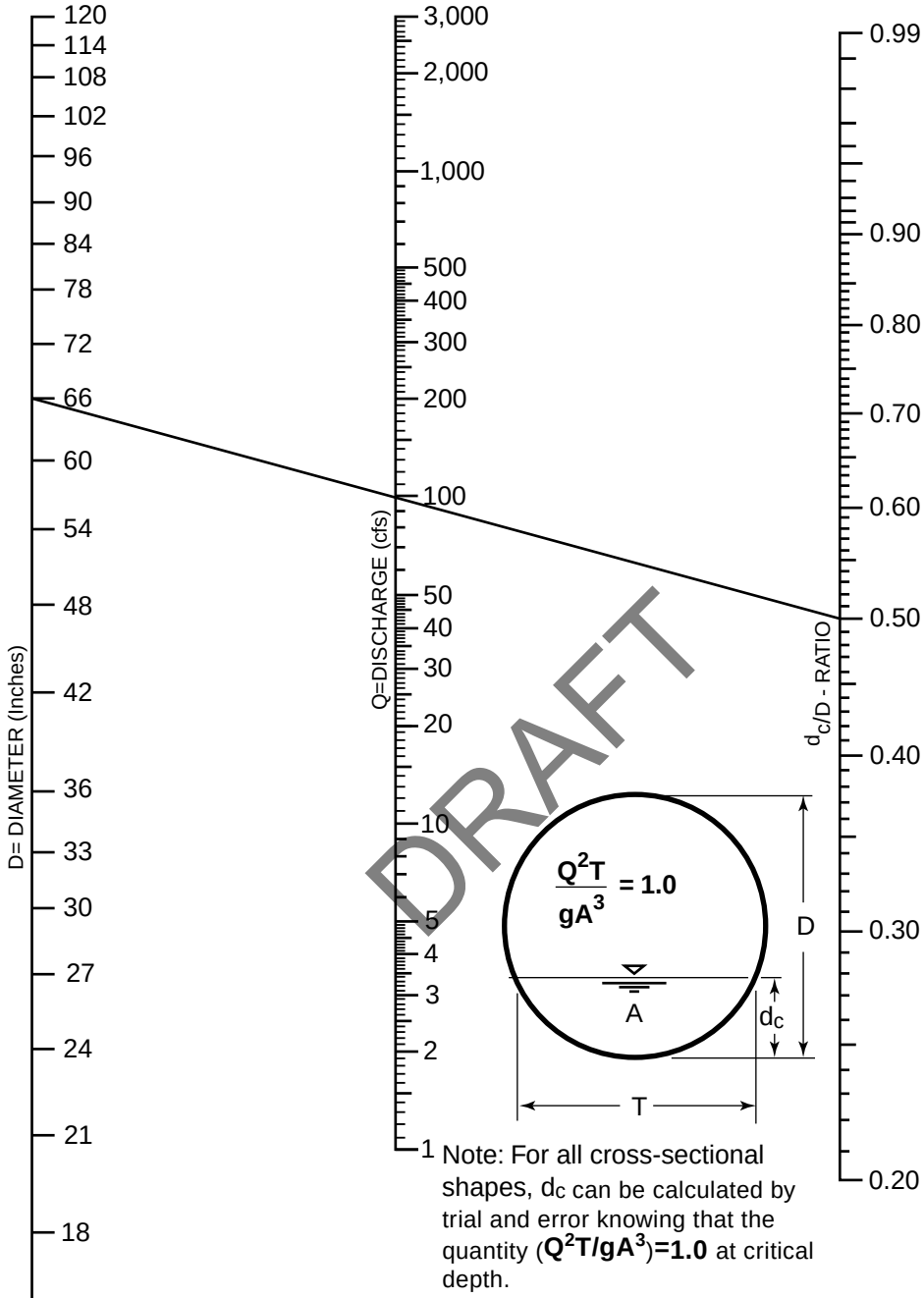

DRAFT

Note: For all cross-sectional shapes, d_c can be calculated by trial and error knowing that the quantity (Q^2T/gA^3)=**1.0** at critical depth.

EXAMPLE

D = 66 inches, Q = 100cfs

d_c/D - Ratio = 0.50

d_c = (0.50)(66 inches)= 33 inches ÷ (12 inches/ft)

d_c= 2.75 feet

FIGURE 4.3.1.G COMPUTER SUBROUTINES BWPIPE AND BWCULV: VARIABLE DEFINITIONS

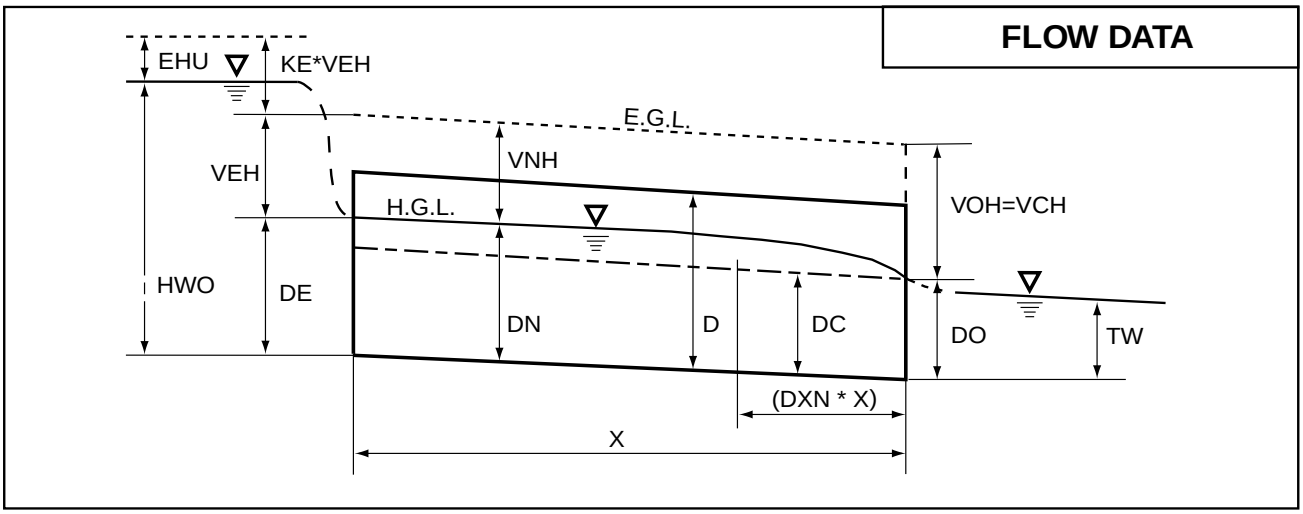

FLOW DATA	COEFFICIENTS/INLET DATA
DC -Critical Depth (ft)	**KE -Entrance Coefficient under Outlet Control**
DN -Normal Depth (ft)	**KB -Bend Loss Coefficient**
TW -Tailwater Depth (ft)	**KJ -Junction Loss Coefficient**
DO -Outlet Depth (ft)	**K -Inlet Control Equation parameter (See** Table 4.3.1.A)
DE -Entrance Depth (ft)	**M -Inlet Control Equation parameter (See** Table 4.3.1.A**)**
HWO -Headwater (ft) assuming Outlet Control	**C -Inlet Control Equation parameter (See** Table 4.3.1.A)
HWI -Headwater (ft) assuming Inlet Control	**Y -Inlet Control Equation parameter (See** Table 4.3.1.A)
DXN -Distance (expressed as a fraction of the pipe length) from the outlet to where the flow profile intersects with normal depth. DXN will equal one under full-flow conditions and will equal zero when a hydraulic jump occurs at the outlet or when normal depth equals zero (normal depth will equal zero when the pipe grade is flat or reversed).	**Q-Ratio Ratio of tributary flow to main upstream flow of Q3/Q1** 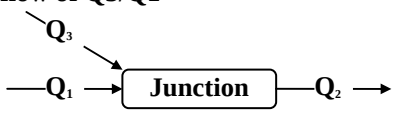
VBH -Barrel Velocity Head (ft) based on the average velocity determined by V=Q/Afull	
VUH -Upstream Velocity Head (ft) based on an inputted velocity.	
EHU -Upstream Energy Head (ft) available after bend losses and junction losses have been subtracted from VUH.	
VCH -Critical Depth Velocity Head (ft)	
VNH -Normal Depth Velocity Head (ft)	
VEH -Entrance Depth Velocity Head (ft)	
VOH -Outlet Depth Velocity Head (ft)	

DRAFT

4.3.2 CULVERTS PROVIDING FOR FISH PASSAGE/MIGRATION

In fish-bearing waters, water-crossing structures must usually provide for fish passage as required for Washington State Department of Fish and Wildlife (WDFW) Hydraulic Project Approval or as a condition of permitting under the critical areas code (KCC 21A.24). Culverts designed for fish passage must also meet the requirements of Section 1.2.4, "Core Requirement #4: Conveyance System."

Fish passage can generally be ensured by providing structures that do not confine the streambed—that is, a structure wide enough so that the stream can maintain its natural channel within the culvert. Bridges, bottomless arch culverts, arch culverts, and rectangular box culverts ("utility vaults") can often be used to accommodate stream channels.

Where it is unfeasible to construct these types of structures, round pipe culverts may be used if high flow velocities are minimized and low flow depths are maximized. The Hydraulic Code Rules (Title 220 WAC) detail requirements for WDFW Hydraulic Project Approval. See the WDFW manual “Design of Road Culverts for Fish Passage” for detailed design methodologies.

Materials

Galvanized metals leach zinc into the environment, especially in standing water situations. High zinc concentrations, sometimes in the range that can be toxic to aquatic life, have been observed in the region. Therefore, use of galvanized materials in stormwater facilities and conveyance systems is discouraged. Where other metals, such as aluminum or stainless steel, or plastics are available, they should be used.

4.3.2.1 DESIGN CRITERIA

Table 4.3.2.A (from Title 220 WAC) lists allowable velocities, flow depths, and hydraulic drops for culverts in fish-bearing streams. Velocities are for the **high flow design discharge**; water depths are for the **low flow design discharge.** The *hydraulic drop* (a vertical drop in the water surface profile at any point within culvert influence) is for all flows between the high and low flow design discharges.

DRAFT

TABLE 4.3.2.A FISH PASSAGE DESIGN CRITERIA

	Adult Trout	Adult Pink, Chum Salmon	Adult Chinook, Coho, Sockeye, Steelhead
1. Max Velocity (fps)			
Culvert Length:			
10-60 ft	4.0	5.0	6.0
60-100 ft	4.0	4.0	5.0
100-200 ft	3.0	3.0	4.0
2. Min Flow Depth (ft)	0.8	0.8	1.0
3. Max Hydraulic Drop (ft)	0.8	0.8	1.0

4.3.2.2 METHODS OF ANALYSIS

High Flow Design Discharge

For **gaged streams**, the high flow design discharge shall be estimated by the 10% exceedance flow for October through April inclusive, proportioned by tributary area to the culvert using the technique described in Section 4.4.2.3 under "Flood Flows from Stream Gage Data" (p. 4-75).

For **ungaged streams,** the high flow design discharge shall be estimated by one of the following:

- The 10% exceedance flow for October through April inclusive for the nearest hydrologically similar gaged stream, proportioned by tributary area
- The 5% exceedance flow determined through duration analysis with the KCRTS model
- The 10% exceedance flow for October through April inclusive determined with the HSPF model or the KCRTS model using the full historical record.

Low Flow Design Discharge

For **gaged streams**, the low flow design discharge shall be estimated by the 95% exceedance flow for October through April inclusive, proportioned by tributary area.

For **ungaged streams**, the low flow design discharge shall be estimated by one of the following:

- The 95% exceedance flow for October through April inclusive for the nearest hydrologically similar gaged stream, proportioned by tributary area
- The 95% exceedance flow for October through April inclusive, determined by the HSPF model or the KCRTS model using the full historical record
- One of the following equations, using KCRTS input data:

  For the Sea-Tac rainfall region:

$$Q_l = f_r\,(0.46A_{tf} + 0.56A_{tp} + 0.46A_{tg} + 0.72A_{of} + 0.96A_{op} + 1.10A_{og}) / 1000 \qquad (4\text{-}8)$$

  For the Landsburg rainfall region:

$$Q_l = f_r\,(0.65A_{tf} + 0.90A_{tp} + 0.70A_{tg} + 1.10A_{of} + 1.45A_{op} + 1.70A_{og} + 0.25A_{wl}) / 1000 \qquad (4\text{-}9)$$

where
Q_l = low flow design discharge (cfs)
f_r = regional rainfall scale factor from Figure 3.2.2.A
A_{tf} = area of till forest (acres)
A_{tp} = area of till pasture (acres)
A_{tg} = area of till grass (acres)
A_{of} = area of outwash forest (acres)
A_{op} = area of outwash pasture (acres)
A_{og} = area of outwash grass (acres)

Note: Minimum depths may also be met by providing an "installed no-flow depth," per Title 220 WAC, where the static water surface level meets minimum flow depth criteria.

DRAFT

4.3.3 BRIDGES

Bridges over waterways are considered conveyance structures and are generally constructed to allow the continuation of a thoroughfare (such as a road). They generally consist of foundation abutments and/or piers that support a deck spanning the waterway. In addition to the **design criteria for conveyance** described below, bridge designs must meet the requirements of the King County Road Standards, Chapter 6, the critical areas code (KCC 21A.24), Shoreline Management (KCC Title 25), and the Clearing and Grading Code (KCC 16.82) as well as the requirements of other agencies such as the Washington State Department of Fish and Wildlife (WDFW).

4.3.3.1 DESIGN CRITERIA

Bridges shall be designed to convey flows and pass sediments and debris for runoff events up to and including the 100-year event in a manner that does not increase the potential for flooding or erosion to properties and structures near or adjacent to the bridge, or cause bridge failure. Inadequate conveyance capacity may cause flooding to increase by restricting flow through the hydraulic openings, by placing approach fill or abutments in floodplains, by causing changes in channel gradient and alignment or by trapping debris. A common mode of bridge failure involving debris is the resultant scour and undermining of piers or abutments where debris accumulates.

Openings between the structural elements of the bridge and the bottom of the channel or floodplain ground surface must be large enough to allow for passage of water, sediment, and debris. The horizontal openings are defined by the bridge span, the horizontal distances between piers or abutments.

Bridge clearance is the vertical distance between the 100-year water surface and the low chord of the bridge. **Bridge clearance requirements** are contained in the *King County Road Standards*. *Evaluation of adequate conveyance capacity, referred to in King County Roads Standards, Section 6.02.G., shall consider the following factors.*

DRAFT

Hydraulic Capacity

Bridge and approach roads must **pass the 100-year flow** without creating hydraulic restrictions that cause or increase flooding. Design of bridge and approach roads shall demonstrate compliance with zero-rise and compensatory storage provisions of KCC chapter 21A.24. Of necessity, bridge and approach roads are sometimes constructed within 100-year floodplains. In some cases, approach roads will be inundated and the bridge will not be accessible during extreme events. In other cases, both the bridge and approach roads will be inundated by the 100-year flood. In these cases, the bridge shall be designed to withstand the expected condition while inundated. The design shall employ means to facilitate flow over the bridge and to minimize the potential for erosion of the roadway fill in the approach roads.

Bed Aggradation

Where bed aggradation is probable, the analysis of hydraulic capacity shall assume the bed raised by an amount expected during a suitable **design life** (40 years minimum) of the bridge. Aggradation estimates shall be based on a sediment transport analysis that, where possible, is calibrated to direct cross-section comparisons over time. This analysis shall extend upstream and downstream a sufficient distance to adequately characterize bed aggradation that may affect the hydraulic capacity at the bridge location.

Bed aggradation is frequently associated with channel migration. The location and design of bridges and approach roads shall consider **channel migration hazards**, as mapped by King County.

Debris Passage

Since debris can pass through an opening either partly or totally submerged, the total vertical clearance from the bottom of the structure to the streambed needs to be considered. Required clearance for debris shall include an assessment of the maximum material size available, the ability of the stream to transport

it, and the proximity of debris sources. The **following factors also must be considered**: history of debris problems in the river reaches upstream and downstream of the proposed bridge location, history of debris accumulations on an existing bridge structure or nearby structures upstream and downstream from the proposed bridge location, mapped channel migration hazard and channel migration history of the reach of stream, and skew of the bridge alignment such that piers in floodplain may be in the path of the debris. For a detailed qualitative analysis of debris accumulation on bridges, see the *U.S. Department of Transportation, Federal Highway Administration Publication FHWA-RD-97-028, Potential Drift Accumulation at Bridges*, by Timothy H. Diehl (1997).

Safety Margin

When designing bridges to convey flows and pass sediments and debris, a safety margin **shall be considered** by the design engineer to account for uncertainties in flow rates, debris hazards, water surface elevations, aggradation, and channel migration over time. The safety margin should be increased when the surrounding community is especially susceptible to flood damages that could be exacerbated by a debris jam at the bridge. Section 5 of the Technical Information Report submitted with the project's engineering plans shall include a discussion of the need for a safety margin and the rationale for its selection.

Bridges and Levees

Where bridge structures and approach roads intersect flood containment levees, the bridge structure and approach roads shall be designed and constructed to preserve existing levels of flood containment provided by the existing levee.

Where the existing levee currently provides containment of the 100-year flood, the bridge structure and approach roads shall be designed and constructed to meet FEMA levee and structural performance standards, including sufficient freeboard on the levee in the bridge vicinity, as provided for in 44 CFR.

Bridge Piers and Abutments

Bridge pier and abutment locations are governed by provisions of the King County critical areas code, KCC 21A.24.

DRAFT

4.3.3.2 METHODS OF ANALYSIS

The following methods are acceptable for hydraulic analysis of **bridges** and approach roads:

1. The **Direct Step backwater method** described on page 4-62 shall be used to analyze the hydraulic impacts of bridge piers, abutments, and approach roads to the water surface profile.
2. The Army Corps of Engineers Hydraulic Engineering Center publishes **technical papers on methods** used to address the hydraulic effects of bridge piers, abutments, and approach roads. The book *Open Channel Hydraulics* by V.T. Chow also contains techniques for analyzing hydraulic effects.

4.4 OPEN CHANNELS, FLOODPLAINS, AND FLOODWAYS

This section presents the methods, criteria, and details for hydraulic analysis and design of open channels, and the determination and analysis of floodplains and floodways. The information presented is organized as follows:

Section 4.4.1, "Open Channels"
"Design Criteria," Section 4.4.1.1 (p. 4-56)
"Methods of Analysis," Section 4.4.1.2 (p. 4-61)

Section 4.4.2, "Floodplain/Floodway Analysis"
"No Floodplain Study Required," Section 4.4.2.1 (p. 4-72)
"Approximate Floodplain Study," Section 4.4.2.2 (p. 4-72)
"Minor Floodplain Study," Section 4.4.2.3 (p. 4-73)
"Major Floodplain/Floodway Study," Section 4.4.2.4 (p. 4-73)

4.4.1 OPEN CHANNELS

Open channels may be classified as either natural or constructed. Natural channels are generally referred to as rivers, streams, creeks, or swales, while constructed channels are most often called ditches, or simply channels. The Critical Areas, Shorelines, and Clearing and Grading Codes as well as Chapter 1 of this manual should be reviewed for requirements related to streams.

DRAFT

Natural Channels

Natural channels are defined as those that have occurred naturally due to the flow of surface waters, or those that, although originally constructed by human activity, have taken on the appearance of a natural channel including a stable route and biological community. They may vary hydraulically along each channel reach and should be left in their natural condition, wherever feasible or required, in order to maintain natural hydrologic functions and wildlife habitat benefits from established vegetation.

Constructed Channels

Constructed channels are those constructed or maintained by human activity and include bank stabilization of natural channels. Constructed channels shall be either vegetation-lined, rock-lined, or lined with appropriately bioengineered vegetation.

- **Vegetation-lined channels** are the most desirable of the constructed channels when properly designed and constructed. The vegetation stabilizes the slopes of the channel, controls erosion of the channel surface, and removes pollutants. The channel storage, low velocities, water quality benefits, and greenbelt multiple-use benefits create significant advantages over other constructed channels. The presence of vegetation in channels creates turbulence that results in loss of energy and increased flow retardation; therefore, the design engineer must consider sediment deposition and scour, as well as flow capacity, when designing the channel.
- **Rock-lined channels** are necessary where a vegetative lining will not provide adequate protection from erosive velocities. They may be constructed with riprap, gabions, or slope mattress linings. The rock lining increases the turbulence, resulting in a loss of energy and increased flow retardation. Rock lining also permits a higher design velocity and therefore a steeper design slope than in grass-lined channels. Rock linings are also used for erosion control at culvert and storm drain outlets, sharp channel bends, channel confluences, and locally steepened channel sections.
- **Bioengineered vegetation lining** is a desirable alternative to the conventional methods of rock armoring. *Soil bioengineering* is a highly specialized science that uses living plants and plant parts to

stabilize eroded or damaged land. Properly bioengineered systems are capable of providing a measure of immediate soil protection and mechanical reinforcement. As the plants grow they produce a vegetative protective cover and a root reinforcing matrix in the soil mantle. This root reinforcement serves several purposes:

a) The developed anchor roots provide both shear and tensile strength to the soil, thereby providing protection from the frictional shear and tensile velocity components to the soil mantle during the time when flows are receding and pore pressure is high in the saturated bank.

b) The root mat provides a living filter in the soil mantle that allows for the natural release of water after the high flows have receded.

c) The combined root system exhibits active friction transfer along the length of the living roots. This consolidates soil particles in the bank and serves to protect the soil structure from collapsing and the stabilization measures from failing.

The vegetative cover of bioengineered systems provides immediate protection during high flows by laying flat against the bank and covering the soil like a blanket. It also reduces pore pressure in saturated banks through transpiration by acting as a natural "pump" to "pull" the water out of the banks after flows have receded.

The King County publication *Guidelines for Bank Stabilization Projects* primarily focuses on projects on larger rivers and streams, but the concepts it contains may be used in conjunction with other natural resource information for stabilization projects on smaller systems. The *WDFW Integrated Streambank Protection Guidelines* is another useful reference.

DRAFT

4.4.1.1 DESIGN CRITERIA

General

1. **Open channels** shall be designed to provide required conveyance capacity and bank stability while allowing for aesthetics, habitat preservation, and enhancement. Open channels shall be consistent with the *WDFW Integrated Streambank Protection Guidelines*.

2. An **access easement for maintenance** is required along all constructed channels located on private property. Required easement widths and building setback lines vary with channel top width as shown in Table 4.1 (p. 4-5).

3. **Channel cross-section geometry** shall be trapezoidal, triangular, parabolic, or segmental as shown in Figure 4.4.1.C (p. 4-65) through Figure 4.4.1.E (p. 4-67). **Side slopes** shall be no steeper than 3:1 for vegetation-lined channels and 2:1 for rock-lined channels. *Note: Roadside ditches shall comply with King County Road Standards.*

4. **Vegetation-lined channels** shall have **bottom slope gradients** of 6% or less and a **maximum velocity** at design flow of 5 fps (see Table 4.4.1.A, p. 4-57).

5. **Rock-lined channels or bank stabilization of natural channels** shall be used when design flow velocities exceed 5 feet per second. Rock stabilization shall be in accordance with Table 4.4.1.A (p. 4-57) or stabilized with bioengineering methods as described above in "Constructed Channels (p. 4-55).

TABLE 4.4.1.A CHANNEL PROTECTION

Velocity at Design Flow (fps)		REQUIRED PROTECTION		
Greater than	**Less than or equal to**	**Type of Protection**	**Thickness**	**Minimum Height Above Design Water Surface**
0	5	Grass lining Or Bioengineered lining	N/A	
5	8	Rock lining(1) Or Bioengineered lining	1 foot	1 foot
8	12	Riprap(2)	2 feet	2 feet
12	20	Slope mattress gabion, etc.	Varies	2 feet

(1) Rock Lining shall be reasonably well graded as follows:

Maximum stone size: 12 inches
Median stone size: 8 inches
Minimum stone size: 2 inches

(2) Riprap shall be reasonably well graded as follows:

Maximum stone size: 24 inches
Median stone size: 16 inches
Minimum stone size: 4 inches

Note: Riprap sizing is governed by side slopes on channel, assumed to be approximately 3:1.

DRAFT

Riprap Design[9]

When riprap is set, stones are placed on the channel sides and bottom to protect the underlying material from being eroded. Proper riprap design requires the determination of the median size of stone, the thickness of the riprap layer, the gradation of stone sizes, and the selection of angular stones that will interlock when placed. Research by the U.S. Army Corps of Engineers has provided criteria for selecting the **median stone weight**, $\boldsymbol{W_{50}}$ (Figure 4.4.1.A, p. 4-59). If the riprap is to be used in a highly turbulent zone (such as at a culvert outfall, downstream of a stilling basin, at sharp changes in channel geometry, etc.), the median stone W_{50} should be increased from 200% to 600% depending on the severity of the locally high turbulence. The thickness of the riprap layer should generally be twice the **median stone diameter** ($\boldsymbol{D_{50}}$) or at least that of the maximum stone. The riprap should have a reasonably well graded assortment of stone sizes within the following gradation:

$$1.25 \leq D_{max}/D_{50} \leq 1.50$$

$$D_{15}/D_{50} = 0.50$$

$$D_{min}/D_{50} = 0.25$$

Detailed design methodology may be found in the Corps publication EM 1110-02-1601, Engineering and Design – Hydraulic Design of Flood Control Channels. For a more detailed analysis and design procedure

[9] From a paper prepared by M. Schaefer, Dam Safety Section, Washington State Department of Ecology.

for riprap requiring water surface profiles and estimates of tractive force, refer to the paper by Maynord et al in *Journal of Hydraulic Engineering (A.S.C.E.)*, July 1989.

Riprap Filter Design

Riprap should be underlain by a sand and gravel filter (or filter fabric) to keep the fine materials in the underlying channel bed from being washed through the voids in the riprap. Likewise, the filter material must be selected so that it is not washed through the voids in the riprap. Adequate filters can usually be provided by a reasonably well graded sand and gravel material where:

$$D_{15} < 5d_{85}$$

The variable d_{85} refers to the sieve opening through which 85% of the material being protected will pass, and D_{15} has the same interpretation for the filter material. A filter material with a D_{50} of 0.5 mm will protect any finer material including clay. Where very large riprap is used, it is sometimes necessary to use two filter layers between the material being protected and the riprap.

Example:

What embedded riprap design should be used to protect a streambank at a level culvert outfall where the outfall velocities in the vicinity of the downstream toe are expected to be about 8 fps?

From Figure 4.4.1.A (p. 4-59), W_{50} = 6.5 lbs, but since the downstream area below the outfall will be subjected to severe turbulence, increase W_{50} by 400% so that:

W_{50} = 26 lbs, D_{50} = 8.0 inches

The gradation of the riprap is shown in Figure 4.4.1.B (p. 4-60), and the minimum thickness would be 1 foot (from Table 4.4.1.A, p. 4-57); however, 16 inches to 24 inches of riprap thickness would provide some additional insurance that the riprap will function properly in this highly turbulent area.

Figure 4.4.1.B (p. 4-60) shows that the gradation curve for ASTM C33, size number 57 coarse aggregate (used in concrete mixes), would meet the filter criteria. Applying the filter criteria to the coarse aggregate demonstrates that any underlying material whose gradation was coarser than that of a concrete sand would be protected.

DRAFT

FIGURE 4.4.1.A
MEAN CHANNEL VELOCITY VS. MEDIUM STONE WEIGHT (W_{50}) AND EQUIVALENT STONE DIAMETER

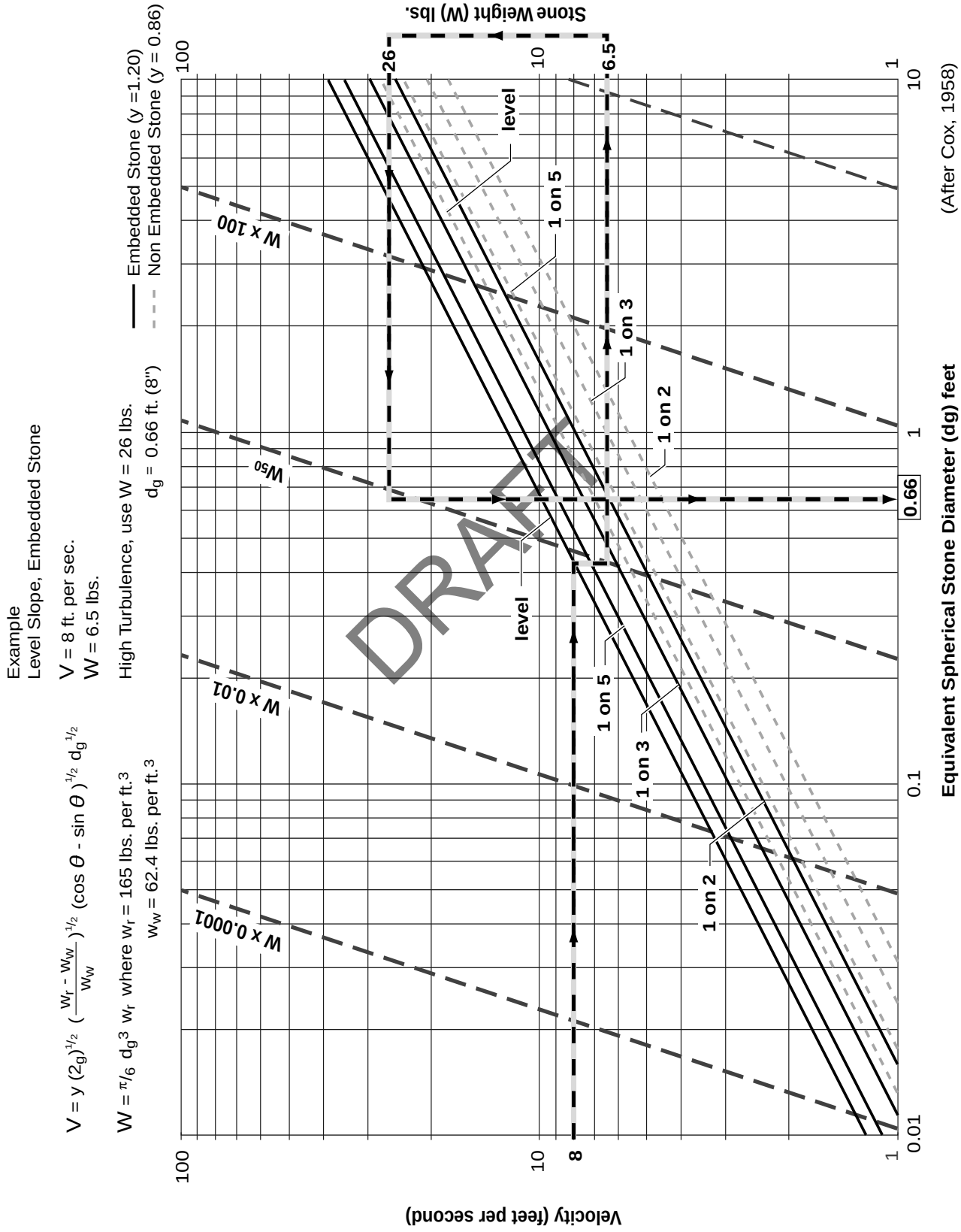

FIGURE 4.4.1.B RIPRAP/FILTER EXAMPLE GRADATION CURVE

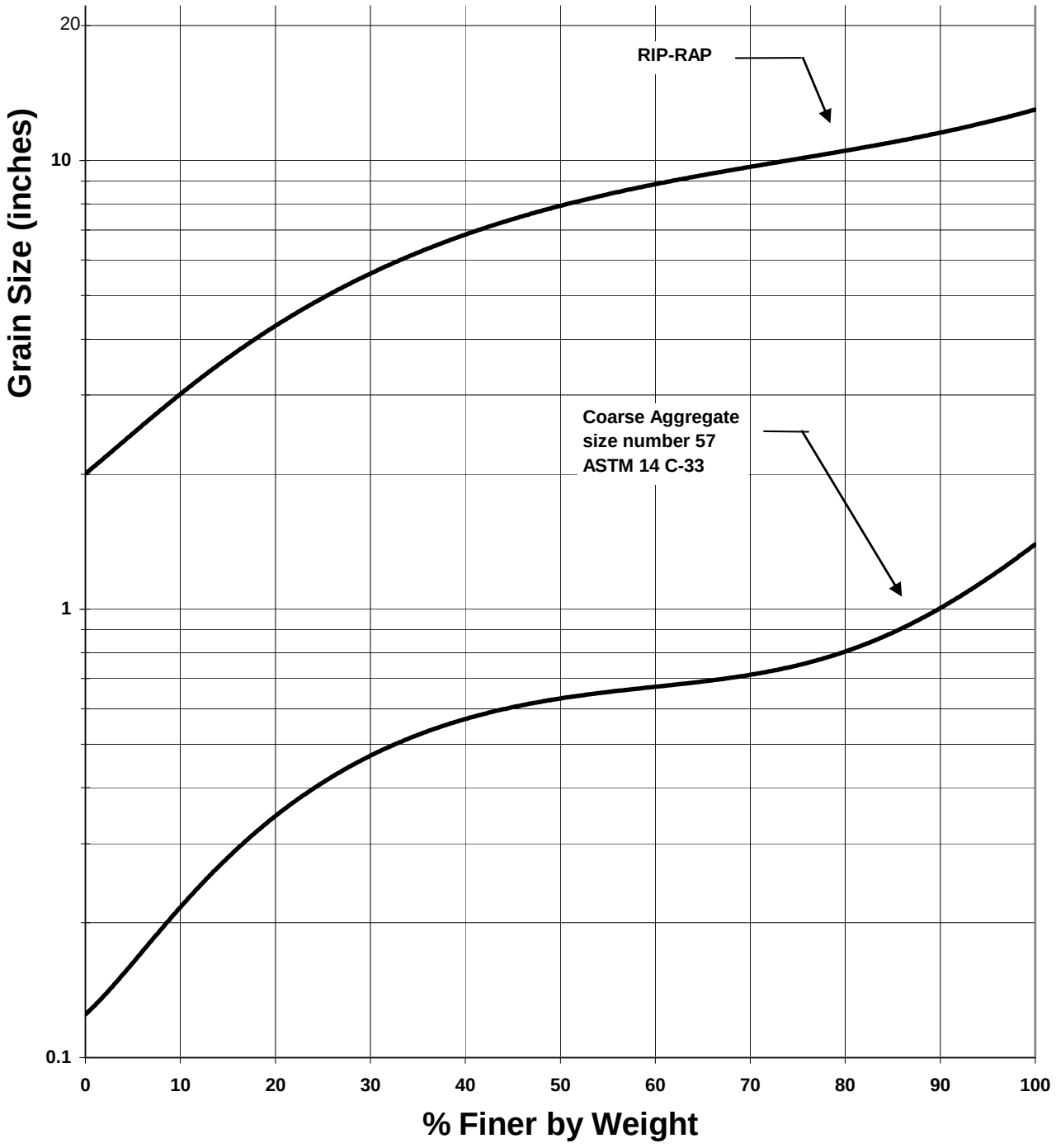

4.4.1.2 METHODS OF ANALYSIS

This section presents the methods of analysis **for designing new or evaluating existing open channels** for compliance with the conveyance capacity requirements set forth in Section 1.2.4, "Core Requirement #4: Conveyance System."

❑ DESIGN FLOWS

Design flows for sizing and assessing the capacity of open channels shall be determined using the hydrologic analysis methods described in Chapter 3.

❑ CONVEYANCE CAPACITY

There are three acceptable methods of analysis for sizing and analyzing the capacity of open channels:

1. Manning's equation for preliminary sizing
2. Direct Step backwater method
3. Standard Step backwater method.

Manning's Equation for Preliminary Sizing

Manning's equation is used for preliminary sizing of open channel reaches of uniform cross section and slope (i.e., prismatic channels) and uniform roughness. This method assumes the flow depth (or normal depth) and flow velocity remain constant throughout the channel reach for a given flow.

The charts in Figure 4.4.1.C (p. 4-65) and Figure 4.4.1.D (p. 4-66) may be used to obtain graphic solutions of Manning's equation for common ditch sections. For conditions outside the range of these charts or for more precise results, Manning's equation can be solved directly from its classic forms shown in Equations (4-1) and (4-2) on page 4-20.

Table 4.4.1.B (p. 4-62) provides a reference for selecting the appropriate "*n*" values for open channels. A number of engineering reference books, such as *Open-Channel Hydraulics* by V.T. Chow, may also be used as guides to select "*n*" values. Figure 4.4.1.E (p. 4-67) contains the geometric elements of common channel sections useful in determining area *A*, wetted perimeter *WP*, and hydraulic radius ($R = A/WP$).

If flow restrictions occur that raise the water level above normal depth within a given channel reach, a *backwater condition* (or subcritical flow) is said to exist. This condition can result from flow restrictions created by a downstream culvert, bridge, dam, pond, lake, etc., and even a downstream channel reach having a higher flow depth. If backwater conditions are found to exist for the design flow, a backwater profile must be computed to verify that the channel's capacity is still adequate as designed. The Direct Step or Standard Step backwater methods presented in this section may be used for this purpose.

DRAFT

TABLE 4.4.1.B VALUES OF ROUGHNESS COEFFICIENT "*n*" FOR OPEN CHANNELS

Type of Channel and Description	Manning's "*n*"* (Normal)
A. Constructed Channels	
a. Earth, straight and uniform	
1. Clean, recently completed	0.018
2. Gravel, uniform section, clean	0.025
3. With short grass, few weeds	0.027
b. Earth, winding and sluggish	
1. No vegetation	0.025
2. Grass, some weeds	0.030
3. Dense weeds or aquatic plants in deep channels	0.035
4. Earth bottom and rubble sides	0.030
5. Stony bottom and weedy banks	0.035
6. Cobble bottom and clean sides	0.040
c. Rock lined	
1. Smooth and uniform	0.035
2. Jagged and irregular	0.040
d. Channels not maintained, weeds and brush uncut	
1. Dense weeds, high as flow depth	0.080
2. Clean bottom, brush on sides	0.050
3. Same as #2, highest stage of flow	0.070
4. Dense brush, high stage	0.100
B. Natural Streams	
B-1 Minor streams (top width at flood stage < 100 ft.)	
a. Streams on plain	0.030
1. Clean, straight, full stage no rifts or deep pools	0.035
2. Same as #1, but more stones and weeds	0.040
3. Clean, winding, some pools and shoals	0.040
4. Same as #3, but some weeds	0.050
5. Same as #4, but more stones	
6. Sluggish reaches, weedy deep pools	0.070
7. Very weedy reaches, deep pools, or floodways with heavy stand of timber and underbrush	0.100
b. Mountain streams, no vegetation in channel, banks usually steep, trees and brush along banks submerged at high stages	
1. Bottom: gravel, cobbles, and few boulders	0.040
2. Bottom: cobbles with large boulders	0.050
B-2 Floodplains	
a. Pasture, no brush	
1. Short grass	0.030
2. High grass	0.035
b. Cultivated areas	
1. No crop	0.030
2. Mature row crops	0.035
3. Mature field crops	0.040
c. Brush	
1. Scattered brush, heavy weeds	0.050
2. Light brush and trees	0.060
3. Medium to dense brush	0.070
4. Heavy, dense brush	0.100
d. Trees	
1. Dense willows, straight	0.150
2. Cleared land with tree stumps, no sprouts	0.040
3. Same as #2, but with heavy growth of sprouts	0.060
4. Heavy stand of timber, a few down trees, little undergrowth, flood stage below branches	0.100
5. Same as #4, but with flood stage reaching branches	0.120

* *Note: These "n" values are "normal" values for use in analysis of channels. For conservative design of channel capacity, the maximum values listed in other references should be considered. For channel bank stability, the minimum values should be considered.*

DRAFT

Direct Step Backwater Method

The Direct Step backwater method may be used to compute backwater profiles on prismatic channel reaches (i.e., reaches having uniform cross section and slope) where a backwater condition or restriction to normal flow is known to exist. The method may be applied to a series of prismatic channel reaches in secession beginning at the downstream end of the channel and computing the profile upstream.

Calculating the coordinates of the water surface profile using this method is an iterative process achieved by choosing a range of flow depths, beginning at the downstream end, and proceeding incrementally up to the point of interest or to the point of normal flow depth. This is best accomplished by the use of a table (see Figure 4.4.1.G, p. 4-69) or computer programs (as discussed on page 4-64, "Computer Applications").

To illustrate analysis of a single reach, consider the following diagram:

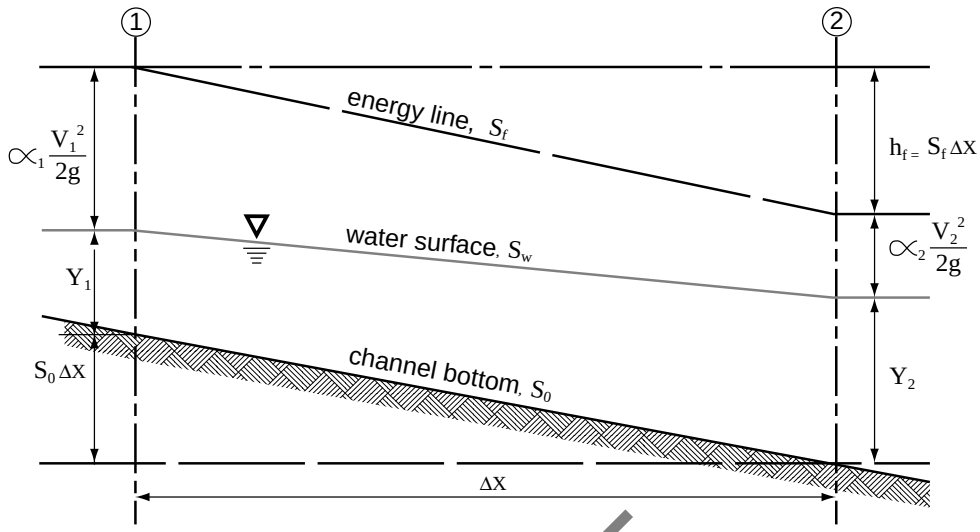

DRAFT

Equating the total head at cross sections 1 and 2, the following equation may be written:

$$S_o \Delta x + y_1 + \alpha_1 \frac{V_1^2}{2g} = y_2 + \alpha_2 \frac{V_2^2}{2g} + S_f \Delta x \tag{4-10}$$

where,
- Δx = distance between cross sections (ft)
- y_1, y_2 = depth of flow (ft) at cross sections 1 and 2
- V_1, V_2 = velocity (fps) at cross sections 1 and 2
- α_1, α_2 = energy coefficient at cross sections 1 and 2
- S_o = bottom slope (ft/ft)
- S_f = friction slope = $(n^2V^2)/(2.21R^{1.33})$
- g = acceleration due to gravity, (32.2 ft/sec^2)

If the specific energy E at any one cross section is defined as follows:

$$E = y + \alpha \frac{V^2}{2g} \tag{4-11}$$

and assuming $\alpha = \alpha_1 = \alpha_2$ where α is the energy coefficient that corrects for the non-uniform distribution of velocity over the channel cross section, Equations (4-10) and (4-11) can be combined and rearranged to solve for Δx as follows:

$$\Delta x = (E_2 - E_1)/(S_o - S_f) = \Delta E/(S_o - S_f) \tag{4-12}$$

Typical values of the energy coefficient α are as follows:

Channels, regular section	1.15
Natural streams	1.3
Shallow vegetated flood fringes (includes channel)	1.75

For a given flow, channel slope, Manning's "*n*," and energy coefficient α, together with a beginning water surface elevation y_2, the values of Δx may be calculated for arbitrarily chosen values of y_1. The coordinates defining the water surface profile are obtained from the cumulative sum of Δx and corresponding values of y.

The **normal flow depth**, y_n, should first be calculated from Manning's equation to establish the upper limit of the backwater effect.

Standard Step Backwater Method

The Standard Step Backwater Method is a variation of the Direct Step Backwater Method and may be used to compute backwater profiles on both prismatic and non-prismatic channels. In this method, stations are established along the channel where cross section data is known or has been determined through field survey. The computation is carried out in steps from station to station rather than throughout a given channel reach as is done in the Direct Step method. As a result, the analysis involves significantly more trial-and-error calculation in order to determine the flow depth at each station.

Computer Applications

Because of the iterative calculations involved, use of a computer to perform the analysis is recommended. The **King County Backwater (KCBW) computer program** included in the software package available with this manual includes a subroutine, **BWCHAN**, based on the Standard Step backwater method, which may be used for all channel capacity analysis. It can also be combined with the **BWPIPE** and **BWCULV** subroutines to analyze an entire drainage conveyance system. A schematic description of the nomenclature used in the **BWCHAN** subroutine is provided in Figure 4.4.1.H (p. 4-70). See the KCBW program documentation for further information.

There are a number of commercial software programs for use on personal computers that use variations of the Standard Step backwater method for determining water surface profiles. The most common and widely accepted program is called HEC-RAS, published and supported by the United States Army Corps of Engineers Hydraulic Engineering Center. It is one of the models accepted by FEMA for use in performing flood hazard studies for preparing flood insurance maps.

DRAFT

FIGURE 4.4.1.C DITCHES — COMMON SECTIONS

PROPERTIES OF DITCHES

	DIMENSIONS				HYDRAULICS			
NO.	Side Slopes	B	H	W	A	WP	R	$R^{(2/3)}$
D-1	--	--	6.5"	5'-0"	1.84	5.16	0.356	0.502
D-1C	--	--	6"	25'-0"	6.25	25.50	0.245	0.392
D-2A	1.5:1	2'-0"	1'-0"	5'-0"	3.50	5.61	0.624	0.731
B	2:1	2'-0"	1'-0"	6'-0"	4.00	6.47	0.618	0.726
C	3:1	2'-0"	1'-0"	8'-0"	5.00	8.32	0.601	0.712
D-3A	1.5:1	3'-0"	1'-6"	7'-6"	7.88	8.41	0.937	0.957
B	2:1	3'-0"	1'-6"	9'-0"	9.00	9.71	0.927	0.951
C	3:1	3'-0"	1'-6"	12'-0"	11.25	12.49	0.901	0.933
D-4A	1.5:1	3'-0"	2'-0"	9'-0"	12.00	10.21	1.175	1.114
B	2:1	3'-0"	2'-0"	11'-0"	14.00	11.94	1.172	1.112
C	3:1	3'-0"	2'-0"	15'-0"	18.00	15.65	1.150	1.098
D-5A	1.5:1	4'-0"	3'-0"	13'-0"	25.50	13.82	1.846	1.505
B	2:1	4'-0"	3'-0"	16'-0"	30.00	16.42	1.827	1.495
C	3:1	4'-0"	3'-0"	22'-0"	39.00	21.97	1.775	1.466
D-6A	2:1	--	1'-0"	4'-0"	2.00	4.47	0.447	0.585
B	3:1	--	1'-0"	6'-0"	3.00	6.32	0.474	0.608
D-7A	2:1	--	2'-0"	8'-0"	8.00	8.94	0.894	0.928
B	3:1	--	2'-0"	12'-0"	12.00	12.65	0.949	0.965
D-8A	2:1	--	3'-0"	12'-0"	18.00	13.42	1.342	1.216
B	3:1	--	3'-0"	18'-0"	27.00	18.97	1.423	1.265
D-9	7:1	--	1'-0"	14'-0"	7.00	14.14	0.495	0.626
D-10	7:1	--	2'-0"	28'-0"	28.00	28.28	0.990	0.993
D-11	7:1	--	3'-0"	42'-0"	63.00	42.43	1.485	1.302

DRAFT

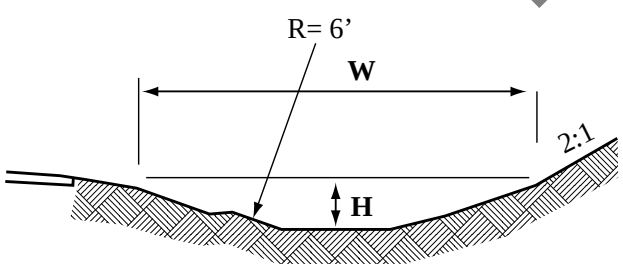

D-1 Segmental (parabolic)

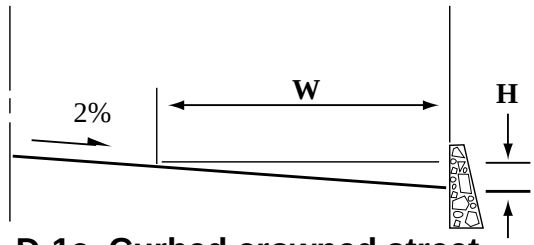

D-1c Curbed crowned street

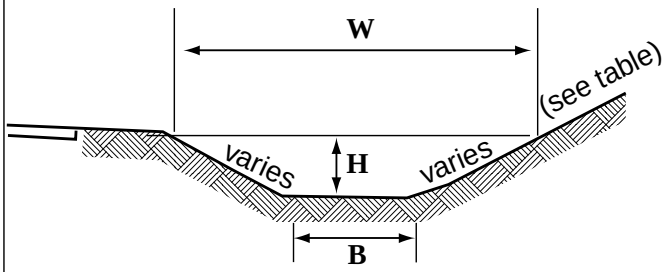

D-2, D-3, D-4, D-5 Trapezoidal

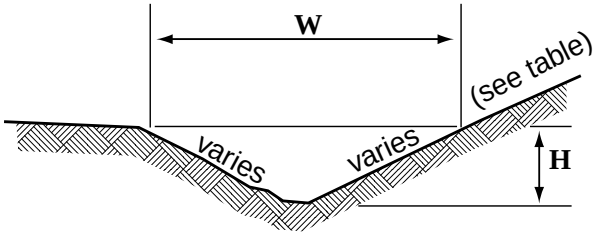

Isosceles triangular D-6 through D-11

FIGURE 4.4.1.D DRAINAGE DITCHES — COMMON SECTIONS

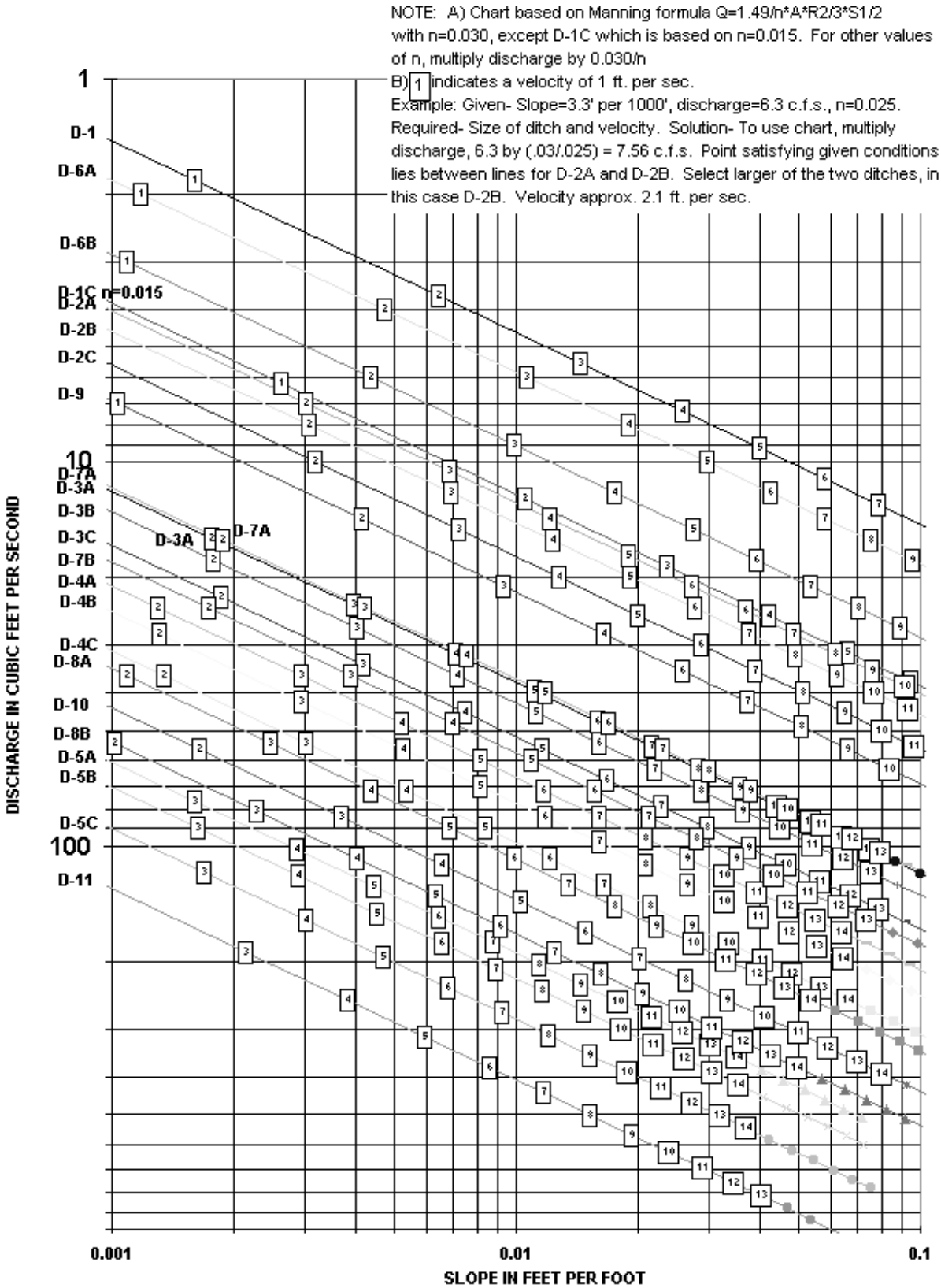

FIGURE 4.4.1.E GEOMETRIC ELEMENTS OF COMMON SECTIONS

Section	Area A	Wetted perimeter P	Hydraulic radius R	Top width W	Hydraulic depth D	Section factor Z
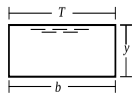 Rectangle	by	$b + 2y$	$\frac{by}{b + 2y}$	b	y	$by^{1.5}$
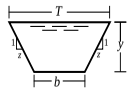 Trapezoid	$(b + zy)y$	$b + 2y\sqrt{1 + z^2}$	$\frac{(b + zy)y}{b + 2y\sqrt{1 + z^2}}$	$b + 2zy$	$\frac{(b + zy)y}{b + 2zy}$	$\frac{[(b + zy)y]^{1.5}}{\sqrt{b + 2zy}}$
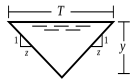 Triangle	zy^2	$2y\sqrt{1 + z^2}$	$\frac{zy}{2\sqrt{1 + z^2}}$	$2zy$	$\frac{1}{2}y$	$\frac{\sqrt{2}}{2}zy^{2.5}$
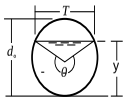 Circle	$\frac{1}{8}(\theta - \sin\theta)d_o^2$	$\frac{1}{2}\theta d_o$	$\frac{1}{4}\left(1 - \frac{\sin\theta}{\theta}\right)d_o$	$(\sin(\frac{1}{2}\theta)d_o)$ or $2\sqrt{y(d_o - y)}$	$\frac{1}{8}\left(\frac{\theta - \sin\theta}{\sin\frac{1}{2}\theta}\right)d_o$	$\frac{\sqrt{2}}{32}\frac{(\theta - \sin\theta)^{1.5}}{(\sin\frac{1}{2}\theta)^{0.5}}d_o^{2.5}$
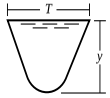 Parabola	$\frac{2}{3}Ty$	$T + \frac{8y^2}{3T}$ *	$\frac{2T^2y}{3T^2 + 8y^2}$ *	$\frac{3A}{2y}$	$\frac{2}{3}y$	$\frac{2}{9}\sqrt{6}Ty^{1.5}$
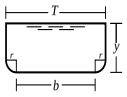 Round-cornered Rectangle ($y>r$)	$(\frac{\pi}{2} - 2)r^2 + (b + 2r)y$	$(\pi - 2)r + b + 2y$	$\frac{(\frac{\pi}{2} - 2)r^2 + (b + 2r)y}{(\pi - 2)r + b + 2y}$	$b + 2r$	$\frac{(\frac{\pi}{2} - 2)r^2}{(b + 2r)} + y$	$\frac{[(\frac{\pi}{2} - 2)r^2 + (b + 2r)y]^{1.5}}{\sqrt{b + 2y}}$
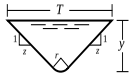 Round-bottomed Triangle	$\frac{T^2}{4z} - \frac{r^2}{z}(1 - z\cot^{-1}z)$	$\frac{T}{z}\sqrt{1 + z^2} - \frac{2r}{z}(1 - z\cot^{-1}z)$	$\frac{A}{P}$	$2[z(y - r) + r\sqrt{1 + z^2}]$	$\frac{A}{T}$	$A\sqrt{\frac{A}{T}}$

*Satisfactory approximation for the interval 0<x≤1, where x=4y/T. When x>1, use the exact expression $P = (\frac{T}{2})\left[\sqrt{1 + x^2} + \frac{1}{x}\ln\left(x + \sqrt{1 + x^2}\right)\right]$

DRAFT

FIGURE 4.4.1.F OPEN CHANNEL FLOW PROFILE COMPUTATION

Q = _____ n = _____ S_o = _____ α = _____ Y_n = _____

y (1)	A (2)	R (3)	$R^{4/3}$ (4)	V (5)	$\alpha V^2/2g$ (6)	E (7)	ΔE (8)	S_f (9)	$\bar{S}_f$ (10)	$S_o - \bar{S}_f$ (11)	Δx (12)	x (13)

DRAFT

FIGURE 4.4.1.G DIRECT STEP BACKWATER METHOD - EXAMPLE

y (1)	A (2)	R (3)	$R^{4/3}$ (4)	V (5)	$\alpha V^2/2g$ (6)	E (7)	ΔE (8)	S_f (9)	$\bar{S}_f$ (10)	$S_o - \bar{S}_f$ (11)	Δx (12)	x (13)
6.0	72.0	2.68	3.72	0.42	0.0031	6.0031	-	0.00002	-	-	-	-
5.5	60.5	2.46	3.31	0.50	0.0040	5.5040	0.4990	0.00003	0.000025	0.00698	71.50	71.5
5.0	50.0	2.24	2.92	0.60	0.0064	5.0064	0.4976	0.00005	0.000040	0.00696	71.49	142.99
4.5	40.5	2.01	2.54	0.74	0.0098	4.5098	0.4966	0.00009	0.000070	0.00693	71.64	214.63
4.0	32.0	1.79	2.17	0.94	0.0157	4.0157	0.4941	0.00016	0.000127	0.00687	71.89	286.52
3.5	24.5	1.57	1.82	1.22	0.0268	3.5268	0.4889	0.00033	0.000246	0.00675	72.38	358.90
3.0	18.0	1.34	1.48	1.67	0.0496	3.0496	0.4772	0.00076	0.000547	0.00645	73.95	432.85
2.5	12.5	1.12	1.16	2.40	0.1029	2.6029	0.4467	0.00201	0.001387	0.00561	79.58	512.43
2.0	8.0	0.89	0.86	3.75	0.2511	2.2511	0.3518	0.00663	0.004320	0.00268	131.27	643.70

The step computations are carried out as shown in the above table. The values in each column of the table are explained as follows:

Col. 1. Depth of flow (ft) assigned from 6 to 2 feet

Col. 2. Water area (ft^2) corresponding to depth y in Col. 1

Col. 3 Hydraulic radius (ft) corresponding to y in Col. 1

Col. 4. Four-thirds power of the hydraulic radius

Col. 5. Mean velocity (fps) obtained by dividing Q (30 cfs) by the water area in Col. 2

Col. 6. Velocity head (ft)

Col. 7. Specific energy (ft) obtained by adding the velocity head in Col. 6 to depth of flow in Col. 1

Col. 8. Change of specific energy (ft) equal to the difference between the E value in Col. 7 and that of the previous step.

Col. 9. Friction slope S_f, computed from V as given in Col. 5 and $R^{4/3}$ in Col. 4

Col.10. Average friction slope between the steps, equal to the arithmetic mean of the friction slope just computed in Col. 9 and that of the previous step

Col.11. Difference between the bottom slope, S_o, and the average friction slope, S_f

Col.12. Length of the reach (ft) between the consecutive steps;
Computed by $\Delta x = \Delta E/(S_o - S_f)$ or by dividing the value in Col. 8 by the value in Col. 11

Col.13. Distance from the beginning point to the section under consideration. This is equal to the cumulative sum of the values in Col. 12 computed for previous steps.

DRAFT

FIGURE 4.4.1.H BWCHAN COMPUTER SUBROUTINE - VARIABLE DEFINITIONS

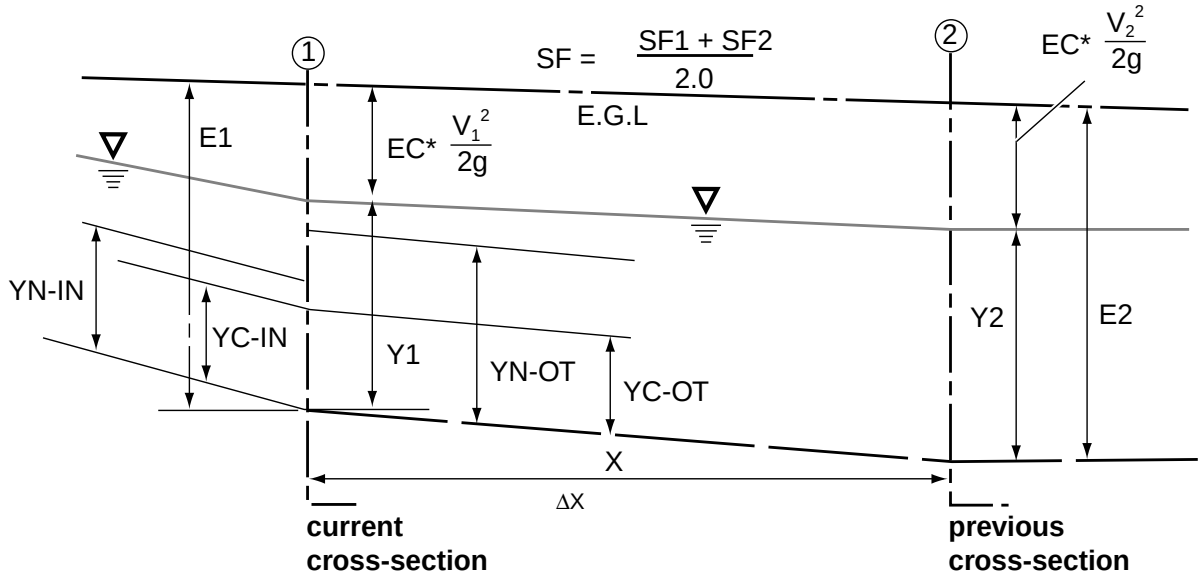

	BWCHAN – VARIABLE DEFINITIONS
YC-IN	Critical Depth (ft) at current section based on ***incoming*** flow rate.
YC-OUT	Critical Depth (ft) at current section based on ***outgoing*** flow rate.
YN-IN	Normal Depth (ft) at current section based on ***incoming*** flow rate/channel grade.
YN-OUT	Normal Depth (ft) at current section based on ***outgoing*** flow rate/channel grade.
Y1	Final Water Depth (ft) at current cross section
N-Y1	Composite n-factor of current section for final depth, Y1.
A-Y1	Cross-sectional Area of current section for final depth, Y1.
WP-Y1	Wetted Perimeter (ft) of current section for final depth, Y1.
V-Y1	Average Velocity (fps) of current section for final depth, Y1.
E1	Total Energy Head (ft) at current section $\left(Y1 + EC * V_1^2 / 2g\right)$
E2	Total Energy Head (ft) at pervious or downstream section.
SF1	Friction Slope of current section.
SF2	Friction Slope of previous or downstream section.
DXY	Distance (expressed as a fraction of the current reach length) from the previous or downstream section to where the flow profile would intersect the final water depth, Y1, assuming Y1 were to remain constant
EC	Energy Coefficient "α"
Q-TW	The flow rate used to determine Tailwater Height from an inputted HW/TW Data File.
TW-HT	Tailwater Height.
Q-Y1	Flow rate (cfs) in channel at current section, for depth, Y1
VU-Y1	Upstream Velocity (fps) at current section for depth, Y1 ("Adjust" option).
V1-HD	Channel Velocity Head (ft) at current section.
VU-HD	Upstream Velocity Head (ft) at current section.

DRAFT

4.4.2 FLOODPLAIN/FLOODWAY ANALYSIS

This section describes the floodplain/floodway studies required by Special Requirement #2, Flood Hazard Area Delineation, in Section 1.3.2. Floodplain/floodway studies, as required by this manual, establish base flood elevations and delineate floodplains and/or floodways when DDES determines that a proposed project contains or is adjacent to a ***flood hazard area*** for a river, stream, lake, wetland, closed depression, marine shoreline, or other water feature. Furthermore, when development is proposed within the floodplain, the floodplain/floodway study is used to show compliance with the critical areas code (KCC 21A.24) ***flood hazard area*** regulations.

There are four conditions affecting the requirements for floodplain/floodway studies. Each condition is considered a threshold for determining the type of studies required and the documentation needed to meet the study requirements. Each study threshold and related study requirements are shown in the table below, and described further in this section.

TABLE 4.4.2.A FLOODPLAIN/FLOODWAY STUDY THRESHOLDS AND REQUIREMENTS

Threshold	Study	Requirements
The ***project site*** is on land that is outside of an already delineated floodplain and above the floodplain's base flood elevation based on best available floodplain data determined in accordance with KCC 21A.24 and associated public rule.	No floodplain study required	• Show delineation of floodplain on the site improvement plan and indicate base flood elevation • Record a notice on title See Section 4.4.2.1 for more details
The ***project site*** is on land that is at least 10 feet above the ordinary high water mark or 2 feet above the downstream overflow elevation of a water feature for which a floodplain has not been determined in accordance with KCC 21A.24.	Approximate Floodplain Study per Section 4.4.2.2	• Submit an engineering plan with approximate base flood elevation • Record a notice on title See Section 4.4.2.2 for more details
The ***project site*** does not meet the above thresholds and is either on land that is outside of an already delineated Zone A floodplain (i.e., without base flood elevations determined), or is adjacent to a water feature for which a floodplain has not been determined in accordance with KCC 21A.24.	Minor Floodplain Study per Section 4.4.2.3	• Backwater model • Submit an engineering plan with determined base flood elevation[1] • Record a notice on title See Section 4.4.2.3 for more details
The ***project site*** is on land that is partially or fully within an already delineated floodplain of a river or stream, or is determined by a Minor Floodplain Study to be partially or fully within the floodplain of a river or stream.	Major Floodplain/Floodway Study per Section 4.4.2.4.	• Show mapped floodplain/floodway on the site improvement plan and indicate base flood elevation • Record a notice on title • See further requirements in Section 4.4.2.4.

[1] For marine shorelines, refer to the FEMA *Guidelines and Specifications for Flood Hazard Mapping Partners*.

DRAFT

4.4.2.1 NO FLOODPLAIN STUDY REQUIRED

IF the proposed ***project site*** is on land that is outside of an already delineated floodplain and is above the already determined base flood elevation for that floodplain, based on best available floodplain data determined in accordance with KCC 21A.24 and associated public rule, THEN no floodplain study is required.

In this situation, if the already determined floodplain covers any portion of the ***site***, the boundary of that floodplain and its base flood elevation must be shown on the project's site improvement plan. In addition, a **notice on title** in accordance with KCC 21A.24 (and associated public rule) must be recorded for the ***site***, alerting future property owners of the presence of a ***flood hazard area*** on the ***site*** and its base flood elevation. The notice on title requirement may be waived if the floodplain is not on any portion of the ***site***.

4.4.2.2 APPROXIMATE FLOODPLAIN STUDY

If the proposed ***project site*** is on land that is at least 10 feet above the ordinary high water mark or 2 feet above the downstream overflow elevation of a water feature for which the floodplain has not been delineated in accordance with KCC 21A.24, then an Approximate Floodplain Study may be used to determine an approximate floodplain and base flood elevation.

The **intent** of the Approximate Floodplain Study is to reduce required analysis in those situations where the ***project site*** is adjacent to a ***flood hazard area***, but by virtue of significant topographical relief, is clearly in no danger of flooding. The minimum 10 feet of separation from ordinary high water reduces the level of required analysis for those projects adjacent to streams confined to deep channels or ravines, or near lakes or wetlands. The minimum 2 feet clearance above the downstream overflow elevation is intended to avoid flood hazard areas created by a downstream impoundment of water behind a road fill or in a lake, wetland, or closed depression.

DRAFT

Use of the Approximate Floodplain Study requires submittal of an *engineering plan*[10] showing the proposed ***project site*** is at least 10 feet above the ordinary high water elevation of the water feature in question, or at least 2 feet above the downstream overflow elevation of the water feature, whichever is less, subject to the following conditions:

1. The design engineer preparing the engineering plan shall determine an **approximate base flood elevation** and include a narrative describing his/her level of confidence in the approximate base flood elevation. The **narrative** must include, but is not limited to, an assessment of potential backwater effects (such as might result from nearby river flooding, for example); observations and/or anecdotal information on water surface elevations during previous flood events; and an assessment of potential for significantly higher future flows at basin build out. *Note: Many of these issues will have been addressed in a Level 1 downstream analysis, if required.* Acceptance of the approximate base flood elevation shall be at the sole discretion of King County. If the approximate base flood elevation is not acceptable, a Minor Floodplain Study or Major Floodplain/Floodway Study may be required.
2. That portion of the ***site*** that is at or below the assumed base flood elevation must be delineated and designated as a floodplain on the engineering plan, and a **notice on title** in accordance with KCC 21A.24 (and associated rule) must be recorded for the ***site***, notifying future property owners of the approximate floodplain and base flood elevation.

[10] *Engineering plan* means a site improvement plan, including supporting documentation, stamped by a ***licensed civil engineer***. In some instances, DDES engineering review staff may determine that the proposed project is sufficiently above the clearances specified in this exception and may not require an engineering plan. Typically, this is done for projects in Small Project Drainage Review that clearly exceed minimum clearances and otherwise would not require engineering design.

4.4.2.3 MINOR FLOODPLAIN STUDY

IF the proposed ***project site*** does not meet the conditions for "no floodplain study required" per Section 4.4.2.1 or for use of the Approximate Floodplain Study per Section 4.4.2.2, AND the ***project site*** is either on land that is outside of an already delineated Zone A floodplain (i.e., without base flood elevations determined) or is adjacent to a water feature for which a floodplain has not been determined in accordance with KCC 21A.24, THEN a Minor Floodplain Study may be used to determine the floodplain. However, if the Minor Floodplain Study determines that all or a portion of the ***project site*** is at or below the base flood elevation of a river or stream and thus within the floodplain, then the applicant must either redesign the ***project site*** to be out of the floodplain or complete a Major Floodplain/Floodway Study per Section 4.4.2.4.

Use of the Minor Floodplain Study requires submittal of an engineering plan and supporting calculations. That portion of the ***site*** that is at or below the determined base flood elevation must be delineated and designated as a floodplain on the engineering plan, and a **notice on title** in accordance with KCC 21A.24 (and associated rule) must be recorded for the ***site***, notifying future property owners of the floodplain and base flood elevation.

Methods of Analysis

For **streams** without a floodplain or flood hazard study, or for **drainage ditches or culvert headwaters**, the base flood elevation and extent of the floodplain shall be determined using the Direct Step backwater method, Standard Step backwater method, or the King County Backwater computer program, as described in Section 4.4.1.2.

For **lakes, wetlands, and closed depressions** without an approved floodplain or flood hazard study, the base flood elevation and the extent of the floodplain shall be determined using the "point of compliance technique" described in Section 3.3.6.

DRAFT

4.4.2.4 MAJOR FLOODPLAIN/FLOODWAY STUDY

IF the proposed ***project site*** is on land that is partially or fully within an already delineated floodplain of a **river or stream**, or determined by a Minor Floodplain Study to be partially or fully within the floodplain of a river or stream, THEN a Major Floodplain/Floodway Study is required to determine the floodplain, floodway, and base flood elevation in accordance with the methods and procedures presented in this section. This information will be used by DDES to evaluate the project's compliance with the regulations specified in KCC 21A.24 for development or improvements within the floodplain.

Major Floodplain/Floodway Studies must conform to FEMA regulations described in Part 65 of 44 Code of Federal Regulations (CFR). In addition, the following information must be provided and procedures performed.

❑ INFORMATION REQUIRED

The applicant shall submit the following information for review of a floodplain/floodway analysis in addition to that required for the drainage plan of a proposed project. This analysis shall extend upstream and downstream a sufficient distance to adequately include all backwater conditions that may affect flooding at the ***site*** and all reaches that may be affected by alterations to the ***site***.

Floodplain/Floodway Map

A Major Floodplain/Floodway Study requires submittal of five copies of a separate floodplain/floodway map **stamped by a *licensed civil engineer*** and a **professional land surveyor** registered in the State of Washington (for the base survey). The map must accurately locate any proposed development with respect to the floodplain and floodway, the channel of the stream, and existing development in the floodplain; it must also supply all pertinent information such as the nature of any proposed project, legal

description of the property on which the project would be located, fill quantity, limits and elevation, the building floor elevations, flood-proofing measures, and any use of compensatory storage.

The map must show elevation contours at a minimum of 2-foot vertical intervals and shall comply with survey and map guidelines published in the FEMA publication *Guidelines and Specifications for Flood Hazard Mapping Partners*. The map must **show the following**:

- Existing elevations and ground contours;
- Locations, elevations and dimensions of existing structures, and fills;
- Size, location, elevation, and spatial arrangement of all proposed structures, fills and excavations, including proposed compensatory storage areas, with final grades on the ***site***;
- Location and elevations of roadways, water supply lines, and sanitary sewer facilities, both existing and proposed.

Study Report

A Major Floodplain/Floodway Study also requires submittal of two copies of a study report, **stamped by a *licensed civil engineer***, which must include calculations or any computer analysis input and output information as well as the following additional information:

1. Valley **cross sections** showing the channel of the river or stream, the floodplain adjoining each side of the channel, the computed FEMA floodway, the cross-sectional area to be occupied by any proposed development, and all historic high water information.
2. **Profiles** showing the bottom of the channel, the top of both left and right banks, and existing and proposed base flood water surfaces.
3. Plans and specifications for **flood-proofing** any structures and fills, construction areas, materials storage areas, water supply, and sanitary facilities within the floodplain.
4. Complete **printout** of input and output (including any error messages) for **HEC-RAS**. Liberal use of comments will assist in understanding model logic and prevent review delays.
5. One **ready-to-run digital copy** of the **HEC-RAS** input file used in the study. Data shall be submitted on a disk in Windows format.
6. The applicant shall prepare a **written summary** describing the model development calibration, hydraulic analysis, and floodway delineation. The summary shall also include an explanation of modeling assumptions and any key uncertainties.

DRAFT

❑ DETERMINING FLOOD FLOWS

The **three techniques** used to determine the flows used in the analysis depend on whether gage data is available or whether a basin plan has been adopted. The first technique is for basins in adopted basin plan areas. The second technique is used if a gage station exists on the stream. The third technique is used on ungaged catchments or those with an insufficient length of record. In all cases, the design engineer shall be responsible for assuring that the hydrologic methods used are technically reasonable and conservative, conform to the *Guidelines and Specifications for Flood Hazard Mapping Partners*, and are acceptable by FEMA.

Flood Flows from Adopted Basin Plan Information

For those areas where King County has adopted a basin plan since 1986, flood flows may be determined using information from the adopted basin plan. The hydrologic model used in the basin plan shall be updated to include the latest changes in zoning, or any additional information regarding the basin that has been acquired since the adoption of the basin plan.

Flood Flows from Stream Gage Data

Flood flows from stream gage data may be determined using HEC-FFA, which uses the Log-Pearson Type III distribution method as described in *Guidelines for Determining Flood Flow Frequency*, Bulletin 17B of the Hydrology Committee, prepared by the Interagency Advisory Committee on Water Data (1982). Refer to the FEMA *Guidelines and Specifications for Flood Hazard Mapping Partners* to verify the most current requirements. Use of HEC-FFA is subject to the following requirements:

1. This technique may be used only if data from a gage station in the basin is available for a period of at least ten years that is representative of the current basin conditions.
2. If the difference in the drainage area on the stream at the study location and the drainage area to a gage station on the stream at a different location in the same basin is less than or equal to 50 percent, the flow at the study location shall be determined by transferring the calculated flow at the gage to the study location using a drainage area ratio raised to the 0.86 power, as in the following equation:

$$Q_{SS} = Q_G \left(A_{SS}/A_G\right)^{0.86} \qquad (4\text{-}13)$$

where Q_{SS} = estimated flow for the given return frequency on the stream at the study location
Q_G = flow for the given return frequency on the stream at the gage location
A_{SS} = drainage area tributary to the stream at the study location
A_G = drainage area tributary to the stream at the gage location

3. If the difference in the drainage area at the study location and the drainage area at a gage station in the basin is more than 50 percent and a basin plan has not been prepared, a continuous model shall be used as described below to determine flood flows at the study location.
4. In all cases where dams or reservoirs, floodplain development, or land use upstream may have altered the storage capacity or runoff characteristics of the basin so as to affect the validity of this technique, a continuous model shall be used to determine flood flows at the study location.

DRAFT

Flood Flows from a Calibrated Continuous Model

Flood flows may be determined by utilizing a continuous flow simulation model such as HSPF. Where flood elevations or stream gage data are available, the model shall be calibrated; otherwise, regional parameters[11] may be used.

❑ DETERMINING FLOOD ELEVATIONS, PROFILES, AND FLOODWAYS

Reconnaissance

The applicant's design engineer is responsible for the collection of all existing data with regard to flooding in the study area. This shall include a literature search of all published reports in the study area and adjacent communities, and an information search to obtain all unpublished information on flooding in the immediate and adjacent areas from federal, state, and local units of government. This search shall include specific information on past flooding in the area, drainage structures such as bridges and culverts that affect flooding in the area, available topographic maps, available flood insurance rate maps, photographs of past flood events, and general flooding problems within the study area. A field reconnaissance shall be made by the applicant's design engineer to determine hydraulic conditions of the study area, including type and number of structures, locations of cross sections, and other parameters, including the roughness values necessary for the hydraulic analysis.

[11] Dinacola, 1990. U.S.G.S., Characterization and Simulation of Rainfall-Runoff Relations for Headwater Basins in Western King and Snohomish Counties, Washington.

Base Data

Cross sections used in the hydraulic analysis shall be representative of current channel and floodplain conditions obtained by surveying. When cross-sections data is obtained from other studies, the data shall be confirmed to represent current channel and floodplain conditions, or new channel cross-section data shall be obtained by field survey. Topographic information obtained from aerial photographs may be used in combination with surveyed cross sections in the hydraulic analysis. The **elevation datum** of all information used in the hydraulic analysis shall be specified. All information shall be referenced directly to **NAVD 1988** (and include local correlation to NGVD 1929) unless otherwise approved by King County. See Table 4.4.2.B (p. 4-78) for correlations of other datum to NAVD 1988.

Methodology

Flood profiles and floodway studies shall be calculated using the U.S. Army Corps of Engineers' HEC-RAS computer model (or subsequent revisions).

Floodway Determination

King County recognizes two distinct floodway definitions. The *FEMA floodway* describes the limit to which encroachment into the natural conveyance channel can cause one foot or less rise in water surface elevation. The *zero-rise floodway* is based upon the limit to which encroachment can occur without any measurable increase in water surface elevation or energy grade line. Floodway determinations/studies are subject to the following requirements:

1. **FEMA floodways** are determined through the procedures outlined in the FEMA publication *Guidelines and Specifications for Flood Hazard Mapping Partners* using the 1-foot maximum allowable rise criteria.
2. **Transitions** shall take into account obstructions to flow such as road approach grades, bridges, piers, or other restrictions. General guidelines for transitions may be found in *FEMA Guidelines and Specifications for Flood Hazard Mapping Partners*, and the *HEC-RAS User's Manual, Hydraulic Reference Manual and Applications Guidelines*.
3. **Zero-rise floodways** are assumed to include the entire 100-year floodplain unless King County approves a detailed study that defines a zero-rise floodway.
4. Zero-rise means no measurable increase in **water surface elevation** or **energy grade line**. For changes between the unencroached condition and encroachment to the zero-rise floodway, HEC-RAS must report 0.00 as both the change in water surface elevation and the change in energy grade. HEC-RAS must further report the exact same elevations for both the computed water surface and energy grade line.
5. Floodway studies must reflect the transitions mentioned in Requirement 2 above. FEMA floodway boundaries are to follow stream lines, and should **reasonably balance the rights of property owners** on either side of the floodway. Use of the "automatic equal conveyance encroachment options" in the HEC-RAS program will be considered equitable. Where HEC-RAS automatic options are otherwise not appropriate, the floodway must be placed to minimize the top width of the floodway.
6. **Submittal of floodway studies** for King County review must include an electronic copy of the HEC-RAS input and output files, printouts of these files, and a detailed written description of the modeling approach and findings.

Previous Floodplain Studies

If differences exist between a study previously approved by the County and the applicant's design engineer's calculated hydraulic floodways or flood profiles, the design engineer shall provide justification and obtain County approval for these differences.

DRAFT

Zero-Rise Calculation

For a zero-rise analysis, the flow profile for the existing and proposed ***site*** conditions shall be computed and reported to the nearest 0.01 foot. A zero-rise analysis requires only comparisons of the computed water surface elevations and energy grade lines for the existing and proposed conditions. Such comparisons are independent of natural dynamics and are not limited by the accuracy of the model's absolute water surface predictions.

Adequacy of Hydraulic Model

At a minimum, **King County considers the following factors** when determining the adequacy of the hydraulic model and flow profiles for use in floodway analysis:

1. Cross section spacing
2. Differences in energy grade

   Note: Significant differences in the energy grade from cross section to cross section are an indication that cross sections should be more closely spaced or that other inaccuracies exist in the hydraulic model.
3. Methods for analyzing the hydraulics of structures such as bridges and culverts
4. Lack of flow continuity
5. Use of a gradually-varied flow model

   Note: In certain circumstances (such as weir flow over a levee or dike, flow through the spillway of a dam, or special applications of bridge flow), rapidly-varied flow techniques shall be used in combination with a gradually-varied flow model.
6. Manning's "*n*" values
7. Calibration of the hydraulic model with past flood events
8. Special applications. In some cases, HEC-RAS alone may not be sufficient for preparing the floodplain/floodway analysis. This may occur where sediment transport, two-dimensional flow, or other unique hydraulic circumstances affect the accuracy of the HEC-RAS hydraulic model. In these cases, the applicant shall obtain County approval of other methods proposed for estimating the water surface profiles.

DRAFT

TABLE 4.4.2.B DATUM CORRELATIONS

Correlation From ⟶ To	(Snoq. Valley) NAVD 1988*	KCAS	U.S. Engineers	City of Seattle	NGVD, USGS & USC & GS 1947	Seattle Area Tide Tables & Navigation Charts 1954 & Later
NAVD 1988* (Upper Snoqualmie Valley)	--	-3.58	3.44	-9.54	-3.49	2.98
KCAS	3.58	--	7.02	-5.96	0.09	6.56
U.S. Engineers	-3.44	-7.02	--	-12.98	-6.93	-0.46
City of Seattle	9.54	5.96	12.98	--	6.05	12.52
-NGVD, USGS & USC& GS 1947 (adjusted to the 1929 datum)	3.49	-0.09	6.93	-6.05	--	6.47
Seattle Area Tide Tables & Navigation Charts 1954 & Later (based on epoch 1924-1942)	-2.98	-6.56	0.46	-12.52	-6.47	--
Design Tidal Tailwater Elevation	12.08	8.50	15.52	2.54	8.59	15.06
Mean Higher High Water (MHHW)	8.34	4.76	11.78	-1.20	4.85	11.32
Mean High Water (MHW)	7.49	3.91	10.93	-2.05	4.00	10.47
Mean Low Water (MLW)	-0.16	-3.74	3.28	-9.70	-3.65	2.82
Mean Lower Low Water (MLLW)	-2.98	-6.56	0.46	-12.52	-6.47	0.00

**Varies, contact the King County Department of Transportation (KC-DOT) Survey Division for datum correlation for this and other areas.*

KCAS datum = Sea Level Datum 1929 (a.k.a. NGVD 1929)

DRAFT

CHAPTER 5

FLOW CONTROL DESIGN

KING COUNTY, WASHINGTON
SURFACE WATER DESIGN MANUAL

DRAFT

Section 5.1	**Low Impact Design**	**5-3**
Section 5.1.1	Site Design Concepts	5-3
Section 5.1.2	Use of Materials	5-4
Section 5.2	**Flow Control BMP Requirements**	**5-5**
Section 5.2.1	Individual Lot BMP Requirements	5-5
Section 5.2.2	Requirements for Use of BMP Credits	5-12
Section 5.3	**Detention Facilities**	**5-17**
Section 5.3.1	Detention Ponds	5-17
Section 5.3.2	Detention Tanks	5-31
Section 5.3.3	Detention Vaults	5-35
Section 5.3.4	Control Structures	5-38
Section 5.3.5	Parking Lot Detention	5-49
Section 5.3.6	Roof Detention	5-49
Section 5.3.7	Simple Detention Pond for Cleared Areas	5-50
Section 5.4	**Infiltration Facilities**	**5-59**
Section 5.4.1	General Requirements for Infiltration Facilities	5-59
Section 5.4.2	Infiltration Ponds	5-67
Section 5.4.3	Infiltration Tanks	5-70
Section 5.4.4	Infiltration Vaults	5-73
Section 5.4.5	Infiltration Trenches	5-75
Section 5.4.6	Small Infiltration Basins	5-77

DRAFT

CHAPTER 5

FLOW CONTROL DESIGN

This chapter presents the King County approved methods, criteria, and details for hydraulic analysis and design of flow control facilities and flow control Best Management Practices (BMPs) pursuant to Core Requirement #3, "Flow Control" (see Section 1.2.3). *Flow control facilities*, as described in this manual, are detention or infiltration facilities engineered to meet a specified discharge performance. Four terms are commonly used to describe flow control facilities in King County: detention facilities, retention facilities, infiltration facilities, and R/D (Retention/Detention) facilities. A *detention facility*, by definition, temporarily stores surface water runoff and discharges it at a reduced rate. A *retention facility* stores water longer and effectively has no surface outflow (outflow occurs by evaporation or soaking into the ground). *Infiltration facilities* are retention facilities that rely entirely on the soaking of collected surface water into the ground. The term *R/D facility* has been used in previous versions of this manual to generally refer to all flow control facilities.

Flow control BMPs, also known as low impact development BMPs, are methods and designs for dispersing, infiltrating, or otherwise reducing or preventing development-related increases in runoff at or near the sources of those increases. Flow control BMPs include, but are not limited to, preservation and use of ***native vegetated surfaces*** to fully disperse runoff; use of other pervious surfaces to disperse runoff; roof downspout infiltration; permeable pavements; rainwater harvesting; vegetated roofs; and reduction of development footprint.

DRAFT

Chapter Organization

The information in this chapter is organized into the following four main sections:

- Section 5.1, "Low Impact Design" (p. 5-3)
- Section 5.2, "Flow Control BMP Requirements" (p. 5-5)
- Section 5.3, "Detention Facilities" (p. 5-17)
- Section 5.4, "Infiltration Facilities" (p. 5-59).

These sections begin on odd pages so the user can insert tabs if desired for quicker reference.

Required vs. Recommended Design Criteria

Both required and recommended design criteria are presented in this chapter. Criteria stated using "shall" or "must" are mandatory, to be followed unless there is a good reason to deviate as allowed by the adjustment process (see Section 1.4). These criteria are **required design criteria** and generally affect facility performance or critical maintenance factors. Sometimes options are stated as part of the required design criteria using the language "should" or "may." These criteria are really **recommended design criteria**, but are so closely related to the required criteria that they are placed with it.

DRAFT

5.1 LOW IMPACT DESIGN

This section introduces the concept of reducing stormwater quantity and quality impacts through low impact design techniques, including how the development ***site*** is designed and which materials are used in facilities.

5.1.1 SITE DESIGN CONCEPTS

As discussed in Chapter 3, development causes complex changes to the ***site*** hydrology that can be very difficult to mitigate. On some ***sites*** in King County, it is possible to infiltrate all stormwater, which eliminates impacts from surface water leaving the ***site***. On these ***sites***, further mitigation of stormwater impacts is usually not required. Soils that do not drain well typify most King County ***sites***, and on these ***sites***, mitigating the impact of the increased runoff volume is much more difficult. The more there is disturbance to natural soils and vegetation, the more difficult matching predeveloped hydrology becomes. Minimizing changes to ***site*** hydrology by careful site design can make mitigating these changes much easier. The use of low impact development (LID) concepts is a good approach to site design that helps control increases in stormwater runoff volume and loss of groundwater recharge.

There are numerous manuals and guidance documents from around the country for using LID that utilize somewhat different standards and approaches than what is required in King County. The most useful and locally relevant is the Puget Sound Water Quality Action Team's *Low Impact Development Technical Guidance Manual for Puget Sound*. The following principles of low impact development are borrowed from the Puget Sound Manual are recommended to limit post-development hydrologic changes:

- Maximize retention of native forest cover and restore disturbed vegetation to intercept, evaporate, and transpire precipitation.
- Preserve permeable, native soil and enhance disturbed soils to store and infiltrate storm flows.
- Retain and incorporate topographic features that slow, store, and infiltrate stormwater.
- Retain and incorporate natural drainage features and patterns.
- Locate buildings and roads away from critical areas and soils that provide effective infiltration.
- Minimize total impervious area and eliminate effective impervious surfaces.
- Manage stormwater as close to its origin as possible by utilizing small scale, distributed hydrologic controls.
- Create a hydrologically rough landscape that slows storm flows and increases the time of concentration.
- Increase reliability of the stormwater management system by providing multiple or redundant points of control.
- Integrate stormwater controls into the development design and utilize the controls as amenities—create a multifunctional landscape.
- Utilize a multidisciplinary approach that incorporates planners, engineers, landscape architects and architects at the initial phases of the project.
- Reduce the reliance on traditional conveyance and facility technologies.
- Provide community education and promote community participation in the protection of LID systems and receiving waters.

While the intent of low impact development is to more effectively manage stormwater, LID can and should address other livability issues including:

DRAFT

- Road design that promotes walking and biking as alternative transportation methods, and reduced traffic speeds;
- Development at appropriate densities that meets Growth Management Act goals, and increases access to, and connection between, public transportation modes; and
- Subdivision layout and building design that promote interaction between neighbors and the connection to open space and recreation.

Perhaps the most challenging issue is designing a development that provides the needed housing units or commercial space while minimizing impervious surface and meeting all code requirements. Innovative thinking and a willingness to seek variances to some code requirements are keys to limiting impervious surface.

While the use of LID is strongly encouraged, there is a lack of experience with designing and constructing projects that rely extensively on LID techniques. This edition of the Surface Water Design Manual along with the clearing and grading code requires limited use of these techniques in urban-zoned areas and more extensive use in the rural area where they are more easily applied. These requirements, referred to in this manual as flow control BMPs, are presented in Section 5.2 of this chapter.

5.1.2 USE OF MATERIALS

Galvanized metals leach zinc into the environment, especially in standing water situations. High zinc concentrations, sometimes in the range that can be toxic to aquatic life, have been observed in the region.[1] Therefore, use of galvanized materials in flow control facilities and BMPs should be avoided. Where other metals, such as aluminum or stainless steel, or plastics are available, they shall be used. If these materials are not available, asphalt coated galvanized materials shall be used if available.

DRAFT

[1] Finlayson, 1990. Unpublished data from reconnaissance of Metro Park and Ride lot stormwater characteristics.

5.2 FLOW CONTROL BMP REQUIREMENTS

As specified in the Flow Control BMPs Requirement in Section 1.2.3.3, projects or portions of projects that are subject to Core Requirement #3 and will not be served by infiltration facilities per Section 5.4 (p. 5-59) must apply **flow control BMPs** to either supplement the flow mitigation provided by required flow control facilities or provide flow mitigation where flow control facilities are not required. All such flow control BMPs are detailed in Appendix C of this manual.

Since flow control BMPs seek to control runoff at or near its source and often utilize pervious areas to manage runoff, implementation of this requirement is focused primarily on **individual *site*/lot developments** as opposed to subdivision projects or projects located within road right-of-way. Incentives are provided, however, for implementation on projects other than individual ***site*/lot** developments. Thus, **two kinds of implementation** for this requirement are described in this section as follows:

1. For **non-subdivision projects making improvements on an individual *site*/lot**, implementation of this requirement shall be in accordance with the "Individual Lot BMP Requirements" in Section 5.2.1, which specify the selection of BMPs and the extent of their application to the impervious surfaces of the ***site*/lot**. This required implementation of flow control BMPs must occur as part of the proposed project and provisions must be made for their future maintenance as specified in Section 5.2.1.
2. For **subdivision projects** or **projects within rights-of-way** (e.g., road improvements), implementation of this requirement is **incentive-based**. In other words, implementation is achieved by giving credits for the application of flow control BMPs per Table 5.2.2.A (p. 5-12). As allowed in Sections 1.2.3 and 1.2.8, these credits may be used to reduce the size of a required flow control facility, qualify for a flow control facility exception, or reduce the target surfaces subject to flow control or water quality facility requirements. To use these credits, flow control BMPs must be implemented as part of the proposed project and provisions must be made for their future maintenance as specified in Section 5.2.2 (p. 5-12). For subdivision projects proposing to take credit for future implementation of BMPs on the individual lots, provisions must be made to assure their implementation as specified in Section 5.2.2.1, (p. 5-12).

DRAFT

The information presented in this section is organized as follows:

Section 5.2.1, "Individual Lot BMP Requirements"

"Small Lot BMP Requirements," Section 5.2.1.1 (p. 5-6)

"Large Lot Low Impervious BMP Requirements," Section 5.2.1.2 (p. 5-7)

"Large Lot High Impervious BMP Requirements," Section 5.2.1.3 (p. 5-8)

"Implementation Requirements for Individual Lot BMPs," Section 5.2.1.4 (p. 5-9)

Section 5.2.2, "Requirements for Use of BMP Credits"

"Use of Credits by Subdivision Projects," Section 5.2.2.1 (p. 5-12)

"Use of Credits by Projects within Rights-of-Way," Section 5.2.2.2 (p. 5-15)

5.2.1 INDIVIDUAL LOT BMP REQUIREMENTS

For projects on individual ***sites*/lots**, flow control BMPs must be selected and applied according to the individual lot BMP requirements in this section. For purposes of applying flow control BMPs to individual ***sites*/lots**, three categories of requirements have been established based on the size of ***site*/lot** subject to improvements by the project and on the extent of impervious surface coverage resulting from the project on the ***site*/lot**. These categories of requirements are as follows:

- Small Lot BMP Requirements (for ***sites*/lots** <22,000 square feet)

- Large Lot Low Impervious BMP Requirements (for ***sites*/lots** ≥22,000 square feet and ≤45% impervious)
- Large Lot High Impervious BMP Requirements (for ***sites*/lots** ≥22,000 square feet and >45% impervious)

Flow control BMPs must be applied in the order of preference and to the extent specified for the category of individual lot requirements applicable to the proposed project as described in the following subsections and illustrated by the flow chart in Figure 5.2.1.A (p. 5-11). *Note: for lots created by a previous subdivision, some or all of these requirements may have been addressed by flow control BMPs installed on the lots or within common areas, tracts, or road right-of-way. In some cases, the type of BMPs required for a subdivision lot have already been established by a recorded covenant on the lot. See Section 5.2.2.1 (p. 5-12) for more information on pre-installed or pre-determined BMPs in subdivisions.*

5.2.1.1 SMALL LOT BMP REQUIREMENTS

IF the proposed project is on a ***site*/lot smaller than 22,000 square feet**, THEN flow control BMPs must be applied as specified in the requirements below. Projects on small lots are typically single family residential improvements (e.g., homes, outbuildings, etc.) but could be a small commercial development.

1. The feasibility and applicability of full dispersion as detailed in Appendix C, Section C.2.1 must be evaluated for the **roof area** (or an impervious area of equivalent size) on the ***site*/lot**. If feasible and applicable, **full dispersion of roof runoff** must be implemented as part of the proposed project. Typically, small lot full dispersion will be applicable only in subdivisions where enough forest was preserved by tract, easement, or covenant to meet the minimum requirements for full dispersion in Appendix C, Section C.2.1.1. If this first requirement is met for the ***site*/lot**, no other flow control BMPs are required, and the remaining requirements below are optional.
2. Where full dispersion of **roof runoff** (or equivalent) is not feasible or applicable, or will cause flooding or erosion impacts, the feasibility and applicability of full infiltration as detailed in Appendix C, Section C.2.2 must be evaluated for roof runoff (*note, this will require a soils report for the **site/lot***). If feasible and applicable, **full infiltration of roof runoff** must be implemented as part of the proposed project. If this requirement or the full dispersion requirement above is met for the ***site*/lot**, no other flow control BMPs are required, and the remaining requirements below are optional.
3. Where full dispersion or full infiltration of **roof runoff** as specified in Requirements 1 and 2 above is not feasible or applicable, or will cause flooding or erosion impacts, **one or more of the following BMPs** must be applied to (or used to mitigate for) an impervious area equal to at least 10% of the ***site*/lot** for ***site*/lot sizes up to 11,000 square feet** and at least 20% of the ***site*/lot** for ***site*/lot sizes between 11,000 and 22,000 square feet**. For projects located in ***critical aquifer recharge areas***, these impervious area amounts must be doubled. The BMPs listed below may be located anywhere on the ***site*/lot** subject to the limitations and design specifications for each BMP. These BMPs must be implemented as part of the proposed project.
   - **Limited Infiltration** per Appendix C, Section C.2.3,
   - **Basic Dispersion** per Appendix C, Section C.2.4,
   - **Rain Garden** per Appendix C, Section C.2.5,
   - **Permeable Pavement** per Appendix C, Section C.2.6,
   - **Rainwater Harvesting** see Appendix C, Section C.2.7,
   - **Vegetated Roof** per Appendix C, Section C.2.8,
   - **Reduced Impervious Surface Credit** per Appendix C, Section C.2.9,
   - **Native Growth Retention Credit** per Appendix C, Section C.2.10.

DRAFT

4. Any proposed connection of roof downspouts to the *local drainage system*[2] must be via a **perforated pipe connection** as detailed in Appendix C, Section C.2.11.

5.2.1.2 LARGE LOT LOW IMPERVIOUS BMP REQUIREMENTS

IF the proposed project is on a ***site*/lot** that is **22,000 square feet or larger** and will result in an **impervious surface coverage of 45% or less** of the ***site*/lot**, THEN flow control BMPs must be applied as specified in the requirements below. Examples of projects on large lots with low impervious surface coverage include: single family residential improvements (e.g., homes, outbuildings, etc.), ***agricultural projects***, churches, schools, parks, golf courses, cemeteries, and light commercial developments.

1. The feasibility and applicability of **full dispersion** as detailed in Appendix C, Section C.2.1 must be evaluated for all ***target impervious surface***.[3] If feasible and applicable, full dispersion must be implemented as part of the proposed project. Typically, full dispersion will be applicable only to ***sites*/lots** or portions of ***sites*/lots** where enough forest is preserved by a clearing limit per KCC 16.82 or by recorded tract, easement, or covenant to meet the minimum requirements for full dispersion in Appendix C, Section C.2.1.1. If this requirement for full dispersion is met for all ***target impervious surface*** of the project, no other flow control BMPs are required.

2. For that portion of ***target impervious surface*** where full dispersion is not feasible or applicable, or will cause flooding or erosion impacts, the feasibility and applicability of **full infiltration of roof runoff** must be evaluated in accordance with Appendix C, Section C.2.2, or Section 5.4, whichever is applicable based on the type of project.[4] If feasible and applicable, full infiltration of roof runoff must be implemented as part of the proposed project.

3. For that portion of ***target impervious surface*** not addressed by Requirements 1 and 2 above, **one or more of the following BMPs** must be implemented as part of the proposed project:
   - **Full Infiltration** per Appendix C, Section C.2.2, or per Section 5.4, whichever is applicable,[4]
   - **Limited Infiltration** per Appendix C, Section C.2.3,
   - **Basic Dispersion** per Appendix C, Section C.2.4,
   - **Rain Garden** per Appendix C, Section C.2.5,
   - **Permeable Pavement** per Appendix C, Section C.2.6,
   - **Rainwater Harvesting** per Appendix C, Section C.2.7,
   - **Vegetated Roof** per Appendix C, Section C.2.8,
   - **Reduced Impervious Surface Credit** per Appendix C, Section C.2.9,

DRAFT

[2] *Local drainage system* means any natural or constructed drainage feature that collects and concentrates runoff from the ***site*** and discharges it downstream.

[3] ***Target impervious surface*** means that portion of a ***site's*** impervious surface from which runoff impacts are required to be mitigated by a particular set of drainage requirements—in this case, flow control BMP requirements. For projects on **small lots** less than 22,000 square feet, the type and amount of impervious surface that must be served by flow control BMPs as specified in Section 5.2.1.1 is considered the target impervious surface. For projects **on large lots with low impervious surface coverage** and **large lots with high impervious surface coverage**, target impervious surface shall include all ***new impervious surface*** and ***replaced impervious surface*** together with any existing impervious surface added on or after January 8, 2001 (the effective date of the Endangered Species Act "take prohibition" issued by the federal government to protect Puget Sound Chinook salmon). ~~For projects **on large lots with high impervious surface coverage**, target impervious surface shall also include ***replaced impervious surface.***~~ *Note: any impervious surface on the **site** other than target impervious surface may be mitigated by flow control BMPs in trade for not mitigating an equivalent-sized area of target impervious surface.*

[4] For projects subject to Small Project Drainage Review, and for any ***single family residential project*** subject to Full or Large Project Drainage Review, the design requirements and specifications in Appendix C, Section C.2.2 may be used for evaluation and design of full infiltration on individual lots. For all other projects, full infiltration must be evaluated and designed in accordance with the infiltration facility standards in Section 5.4.

- **Native Growth Retention Credit** per Appendix C, Section C.2.10.

4. Any proposed pipe connection of roof downspouts to the local drainage system must be via a **perforated pipe connection** as detailed in Appendix C, Section C.2.11.

5.2.1.3 LARGE LOT HIGH IMPERVIOUS BMP REQUIREMENTS

IF the proposed project is on a ***site*/lot** that is **22,000 square feet or larger** and will result in an **impervious surface coverage of more than 45%** of the ***site*/lot**, THEN flow control BMPs must be applied as specified in the requirements below. Examples of projects on large lots with high impervious surface coverage include typical urban area commercial, multifamily, and industrial developments.

1. The feasibility and applicability of **full dispersion** as detailed in Appendix C, Section C.2.1 must be evaluated for all ***target impervious surface***. If feasible and applicable for any such surface, then full dispersion must be applied to that surface and implemented as part of the proposed project. Typically, full dispersion will be applicable only on the largest ***sites*/lots** where there may be enough forest area available within a ***threshold discharge area*** to meet the 15% ratio of ***fully dispersed*** impervious area to ***native vegetated surface***. If this requirement is met for a ***target impervious surface*** area equal to or exceeding 45% of the ***site*/lot**, no other flow control BMPs are required, and the remaining requirements below are optional.

2. For that portion of ***target impervious surface*** where full dispersion as specified in Requirement 1 above is not feasible or applicable, or will cause flooding or erosion impacts, one or more of the BMPs below must be implemented as needed to achieve application of flow control BMPs to a practicable amount of the ***site's*** impervious surface. This practicable amount is defined as follows. For projects that will result in an impervious surface coverage of more than 45% up to 65%, flow control BMPs must be applied to an impervious area equal to at least 20% of the ***site*/lot** area or 40% of the ***target impervious surface***, whichever is less. For projects that will result in an impervious surface coverage of more than 65%, flow control BMPs must be applied to an impervious area equal to at least 10% of the ***site*/lot** or 20% of the ***target impervious surface***, whichever is less.

   - **Full Infiltration** per Section 5.4,
   - **Limited Infiltration** per Appendix C, Section C.2.3,
   - **Basic Dispersion** per Appendix C, Section C.2.4,
   - **Rain Garden** per Appendix C, Section C.2.5,
   - **Permeable Pavement** per Appendix C, Section C.2.6,
   - **Rainwater Harvesting** per Appendix C, Section C.2.7,
   - **Vegetated Roof** per Appendix C, Section C.2.8,
   - **Reduced Impervious Surface Credit** per Appendix C, Section C.2.9,
   - **Native Growth Retention Credit** per Appendix C, Section C.2.10.

3. Any proposed connection of roof downspouts to the drainage system must be via a **perforated pipe connection** as detailed in Appendix C, Section C.2.11.

DRAFT

5.2.1.4 IMPLEMENTATION REQUIREMENTS FOR INDIVIDUAL LOT BMPS

The flow control BMPs required in Sections 5.2.1.1, 5.2.1.2, or 5.2.1.3 above must be implemented in accordance with the following requirements:

1. **Implementation Responsibility.** All flow control BMPs required for the ***site*/lot** must be implemented (installed) by the applicant as part of the proposed project unless they have already implemented as part of a subdivision project that created the lot per Section 5.2.2.1.

2. **Maintenance Responsibility.** Maintenance of all required flow control BMPs is the responsibility of the owner of the ***site*/lot** served by these BMPs. The responsibility for such maintenance must be clearly assigned to the current and future owners of the ***site*/lot** through a "declaration of covenant and grant of easement" as described in Requirement 3 below.

3. **Declaration of Covenant and Grant of Easement.** To ensure future maintenance of flow control BMPs and allow for County inspection of BMPs, a declaration of covenant and grant of easement must be recorded for each ***site*/lot** that contains flow control BMPs. A draft of the proposed covenant must be reviewed and approved by DDES prior to recording. All required covenants must be recorded prior to final construction approval for the proposed project. If the individual ***site*/lot** contains or will contain flow control or water quality facilities, then the drainage facility covenant in Reference Section 8-J (or equivalent) must be used. Otherwise, the flow control BMP covenant in Reference Section 8-M (or equivalent) must be used, and is designed to achieve the following:

   a) Provide **notice** to future owners of the presence of flow control BMPs on the lot and the responsibility of the owner to retain, uphold, and protect the flow control BMP devices, features, pathways, limits, and restrictions.

   b) Include as an **exhibit**, a *recordable version*[5] of the following drainage plan information:

      - The **flow control BMP site plan** showing all developed surfaces (impervious and pervious) and the location and dimensions of flow control BMP devices, features, flowpaths (if applicable), and limits of native growth retention areas (if applicable). This plan(s) must be to scale and include ***site*** topography in accordance with the specifications for such plans in Appendix C, Section C.4.2. *Note: DDES may waive this element if, for example, the only flow control BMP proposed is a limit on impervious surface (reduced footprint).*

      - The **flow control BMP design and maintenance details** for each flow control BMP per Appendix C, Section C.4.3. This includes a diagram (if applicable) of each flow control BMP device or feature and written maintenance and operation instructions and restrictions for each device, feature, flowpath (if applicable), native growth retention area (if applicable) and impervious surface coverage (if applicable).

   c) Require that each flow control BMP be operated and **maintained at the owner's expense** in accordance with the above exhibit.

   d) Grant King County or its successor the **right to enter** the property at reasonable times for purposes of inspecting the flow control BMPs and to perform any corrective maintenance, repair, restoration, or mitigation work on the flow control BMPs that has not been performed by the property owner within a reasonable time set by DNRP, and to charge the property owner for the cost of any maintenance, repair, restoration, or mitigation work performed by King County.

   e) Prohibit any **modification or removal** of flow control BMPs without written approval from King County. In cases where the modification or removal is done under a King County development permit, the approval must be obtained from DDES (or its successor) and a covenant must be

DRAFT

[5] *Recordable version* means one that meets King County's "Standard Formatting Requirements for Recording Documents" pursuant to RCW 36.18.010 and 65.04.045, available online at ftp://ftp.metrokc.gov/records/formatting_requirements.pdf or from the King County Recorder's Office. These requirements include specifications for such things as page size ($8^1/_2$" x 14" or smaller), font size (at least 8-point), and margin width (1" on all sides of every page if there is a standard cover sheet).

recorded to reflect the changes. In all other cases, the approval must be obtained from DNRP (or its successor) and a covenant must be recorded to reflect the changes. Approval will be granted only if equivalent protection in terms of hydrologic performance is provided by other means.

4. **Timing of Implementation.** All required flow control BMPs must be installed prior to final inspection approval of constructed improvements. For BMPs that rely on vegetation, the vegetation must be planted and starting to grow prior to final construction approval.

5. **Acceptance standards.** Flow control BMPs may be inspected during and/or following construction. Approval of the constructed BMPs will be based on verification that the materials and placement appear to meet the specifications and that the BMPs appear to function as designed. Onsite observations may be used to verify that materials are as specified and material receipts checked. Performance may be evaluated by a ***site*** visit while it is raining or by testing with a bucket of water or garden hose to check pavement permeability or proper connection to BMP devices/features, etc.

6. **Drainage concerns.** If DDES determines that there is a potential for drainage impacts to a neighboring property, then additional measures may be required. Some flow control BMPs may not be appropriate in certain situations, and will not be allowed by DDES where they may cause drainage problems.

7. **Geotechnical concerns.** A geotechnical engineer, engineering geologist, or DDES staff geologist must evaluate flow control BMPs proposed on slopes steeper than 15%. In addition, DDES may require review by a geotechnical engineer or engineering geologist of any proposed BMP within 50 feet of a slope steeper than 15%. DDES may also require some projects to route flows down or around such slopes using non-perforated pipes. Some flow control BMPs may not be appropriate for these locations, and will not be allowed by DDES where flows may cause erosion problems.

8. **Sewage system concerns.** If DDES determines that there is a potential conflict between onsite sewage systems and flow control BMPs, additional measures may be required. Some projects may need to route flows past onsite sewage systems using non-perforated pipes. Also, some flow control BMPs may not be appropriate for these ***sites***, and will not be allowed where sewage systems may be impacted.

DRAFT

FIGURE 5.2.1.A FLOW CHART FOR DETERMING INDIVIDUAL LOT BMP REQUIREMENTS

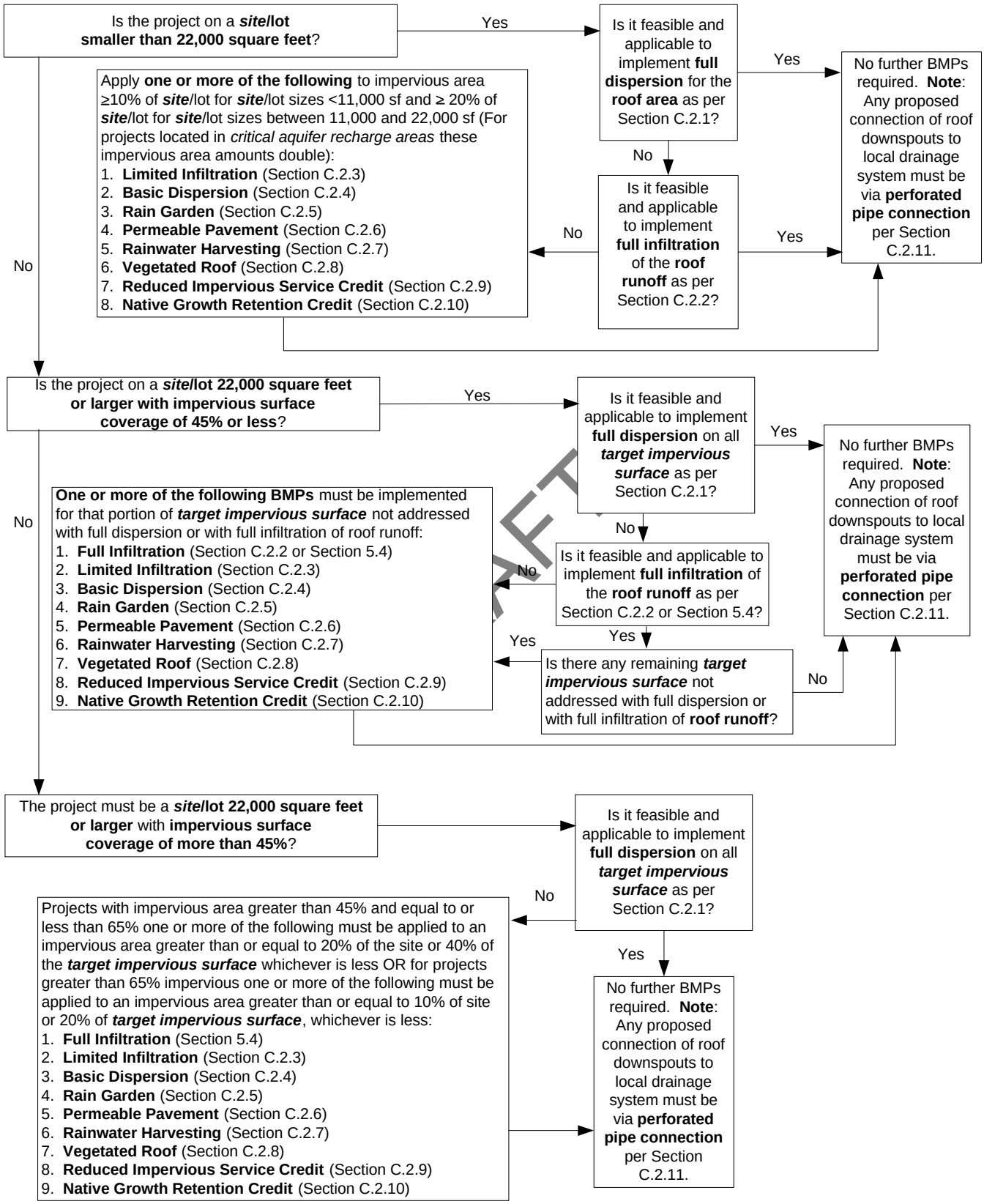

5.2.2 REQUIREMENTS FOR USE OF BMP CREDITS

Projects that implement flow control BMPs, whether required or optional, may use the flow control BMP credits described in this section subject to the requirements in Sections 5.2.2.1 and 5.2.2.2.

Two kinds of credits are available. First, any impervious surface served by a flow control BMP that meets the design specifications for that BMP in Appendix C may be modeled as indicated in Table 5.2.2.A (below). Such credits may be used in the following situations:

1. To compute post-development runoff time series when sizing required flow control facilities.
2. To compute post-development 100-year peak flows when assessing any of the 0.1-cfs exceptions from the area-specific flow control facility requirement in Sections 1.2.3.1A, B, and C.

Second, any impervious or non-native pervious surface that is ***fully dispersed*** per the full dispersion criteria in Section 1.2.3.2C is **not** considered a target surface of the area-specific flow control facility requirement (Section 1.2.3.1) or the area-specific water quality facility requirement (Section 1.2.8.1).

TABLE 5.2.2.A FLOW CONTROL BMP FACILITY SIZING CREDITS(1)

Flow Control BMP Type	Facility Sizing Credit
Full dispersion	Model fully dispersed surface as forest
Full infiltration(2)	Subtract impervious area that is fully infiltrated
Limited infiltration	Model tributary impervious surface as 50% impervious, 50% grass
Basic dispersion	Model dispersed impervious surface as 50% impervious, 50% grass
Rain garden	Model tributary impervious surface as 50% impervious, 50% grass
Permeable pavement (non-grassed)	Model permeable pavement area as 50% impervious, 50% grass
Grassed modular grid pavement	Model permeable pavement as all grass
Rainwater harvesting	Subtract area that is fully controlled
Vegetated roof	Model vegetated roof area as 50% impervious, 50% grass
Restricted footprint	Model footprint as restricted
Wheel strip driveways	Model credited area as 50% impervious, 50% grass
Minimum disturbance foundation	Model foundation area as 50% impervious, 50% grass
Open grid decking over pervious area	Model deck area as 50% impervious, 50% grass
Native growth retention credit	Model credited impervious area as 50% impervious, 50% grass
Perforated pipe connection	None

Notes:

(1) These credits do not apply when determining eligibility for exemptions from Core Requirement #3 or exceptions from the flow control facility requirement unless otherwise noted in the exemption or exception.

(2) For any project subject to Small Project Drainage Review, and for any single family residential project subject to Full or Large Project Drainage Review, the design requirements and specifications in Appendix C, Section C.2.2 may be used for design of full infiltration. For all other projects, full infiltration must be designed in accordance with infiltration facility standards in Section 5.4.

DRAFT

5.2.2.1 USE OF CREDITS BY SUBDIVISION PROJECTS

If a proposed project is a *subdivision project*,[6] implementation of flow control BMPs on the individual lots of the subdivision may be deferred until a permit is obtained for construction on each lot. Therefore, implementation of flow control BMPs as part of the subdivision project is optional. However, if the

[6] For purposes of applying flow control BMPs, the term *subdivision* or *subdivision project* refers to any project that is a short plat, plat, or binding site plan.

applicant wishes to implement or make provision for implementation of BMPs as part of the subdivision project for purposes of receiving the BMP credits noted above, the following requirements must be met depending on where the BMPs are located on the ***site***.

A. SUBDIVISION IMPLEMENTATION OF BMPS WITHIN ROAD RIGHT-OF-WAY

These are flow control BMPs installed within public or private road right-of-way as part of the construction of street and drainage improvements for the subdivision. Such BMPs may include **Basic Dispersion** (i.e., a reversed sloped sidewalk per Appendix C, Section C.2.4.5), a linear-shaped **Rain Garden** (see Appendix C, Section C.2.5), or a **Permeable Pavement** (see Appendix C, Section C.2.6). To receive credit for these BMPs, the subdivision project must meet all of the following requirements:

1. The BMPs must serve impervious surface located only within the road right-of-way.
2. The BMPs must be shown on the **site improvement plans** submitted with the engineering plans for the proposed project as specified in Section 2.3.1.2.
3. If the road right-of-way will be maintained by King County, the BMPs must be approved by the King County Department of Transportation through a **road variance** prior to engineering plan approval.
4. If the road right-of-way will be privately maintained, provision must be made for future **maintenance** of the BMPs in accordance with Core Requirement #6, Section 1.2.6. As specified in Core Requirement #6, King County will assume maintenance of such BMPs in certain cases.
5. If King County will be assuming maintenance of the BMPs, the BMPs must comply with the drainage facility **financial guarantee and liability requirements** in Core Requirement #7, Section 1.2.7.

B. SUBDIVISION IMPLEMENTATION OF BMPS WITHIN DEDICATED TRACTS

These are flow control BMPs installed on or associated with the features (e.g., forest) of common area tracts dedicated by the subdivision. Such BMPs may serve future improvements on lots, common area improvements, or road right-of-way improvements. To receive credit for these BMPs, the subdivision project must meet all of the following requirements:

1. The BMPs must be shown on the **site improvement plans** submitted with the engineering plans for the proposed project as specified in Section 2.3.1.2.
2. Provision must be made for future **maintenance** of the BMPs in accordance with Core Requirement #6, Section 1.2.6. When maintenance by King County is specified by Core Requirement #6, King County will assume maintenance of only BMP devices (e.g., dispersion trenches) and only those that are within a tract dedicated to King County for drainage purposes. In other words, King County will not assume maintenance of BMP devices located in common areas dedicated for purposes other than just drainage (e.g., play areas, parks, etc.).
3. BMPs to be maintained by King County in accordance with Core Requirement #6 must comply with the drainage facility **financial guarantee and liability requirements** in Core Requirement #7, Section 1.2.7.
4. If the BMPs installed within a dedicated tract satisfy some or all of the BMP requirements for individual lots per Section 5.2.1, then a **note** must be placed on the **recorded documents** for the subdivision indicating those lots for which BMPs have been provided.

C. SUBDIVISION IMPLEMENTATION OF BMPS ON INDIVIDUAL LOTS

These are flow control BMPs installed on a subdivision's proposed lots as part of the subdivision project. For example, the subdivision developer may elect to pre-install some or all of the flow control BMPs required by the individual lot BMP requirements in Section 5.2.1. This may include installation of a **rain garden** or **rainwater harvesting** storage tank, for example, on some or all lots as part of the subdivision

DRAFT

project. To receive credits for these BMPs, the subdivision project must meet all of the following requirements:

1. The flow control BMPs must be installed and implemented in accordance with the individual lot BMP requirements in Section 5.2.1. This includes recording a **declaration of covenant and grant of easement** for each lot with BMPs as specified in Implementation Requirement 3 of Section 5.2.1.4 (p. 5-9). If not all of the required BMPs are installed on a lot as part of the subdivision project, language must be included in the covenant notifying the future lot owner of additional required BMPs.
2. BMPs to be installed on individual lots as part of the subdivision project must be shown on the **site improvement plans** submitted with the engineering plans for the proposed project as specified in Section 2.3.1.2.

D. SUBDIVISION FUTURE IMPLEMENTATION OF BMPS ON INDIVIDUAL LOTS

These are flow control BMPs stipulated to be installed on some or all of a subdivision's proposed lots by a declaration of covenant recorded for each such lot. To receive credits for these BMPs, the subdivision project must meet all of the following requirements:

1. Demonstrate through a lot-specific assessment that the flow control BMPs stipulated for each lot are **feasible and applicable** according to the individual lot BMP requirements in Section 5.2.1 and the BMP design specifications in Appendix C. This lot-specific assessment must be included in the TIR submitted with engineering plans for the subdivision. The assessment shall include any soils reports, calculations, or other information necessary to select and properly apply BMPs.
2. Record a **declaration of covenant and grant of easement** for each lot stipulating the type or types of BMP being proposed for credit. This covenant must be as specified in Implementation Requirement 3 of Section 5.2.1.4 (p. 5-9), except as follows:

   a) The **FCBMP site plan**(s) may be waived depending on the BMPs proposed or may be conceptual, showing only the information necessary to stipulate the type or types of BMP being proposed for credit. For example, if the BMP is full dispersion, the approximate location of future impervious surface and the limits of the "native vegetated flowpath segment" (see Appendix C, Section C.2.1) must be shown. If the BMP is full infiltration, the approximate location of future impervious surface, septic drain field (if applicable), and infiltration devices must be shown. For all other BMPs, the "design and maintenance details" (see Item b below) for each proposed BMP per Appendix C may be sufficient as determined by DDES.

   b) The **FCBMP design and maintenance details** must include the dimensions of all proposed devices, features, and flowpaths, expressed as unit amounts per square foot of impervious surface served or as a percentage of the lot size or impervious surface created.

   c) The **notice** to future lot owners must indicate that they are responsible to install the flow control BMP or BMPs stipulated for the lot prior to final inspection approval of constructed lot improvements. Alternative BMPs that provide equivalent performance may be proposed at the time of permit application for proposed lot improvements. In any case, a revised covenant will need to be recorded to reflect the final approved BMPs and site improvement plan(s).
3. If **single family residential lots** are being created, a **note** must be placed on the **recorded documents** for the subdivision indicating the following:

   "Single family residences and other improvements constructed on the lots created by this subdivision must implement the flow control best management practices (BMPs) stipulated in the drainage plan declaration of covenant and grant of easement recorded for each lot. Compliance with this stipulation must be addressed in the small project drainage plan submitted for drainage review when application is made for a single family residential building permit for the lot."

DRAFT

4. If **commercial lots** are being created, a **note** must be placed on the **recorded documents** for the subdivision indicating the following:

   "Improvements constructed on the lots created by this subdivision must implement the flow control best management practices (BMPs) stipulated in the drainage plan declaration of covenant and grant of easement recorded for each lot. Compliance with this stipulation must be addressed in the engineering plans submitted for drainage review when application is made for a permit to make improvements to the lot."

5. If a **binding site plan** is being created, a **note** must be placed on the **recorded documents** for the subdivision indicating the following:

   "Improvements constructed on the lots created by this binding site plan must implement the flow control best management practices (BMPs) stipulated in the drainage plan declaration of covenant and grant of easement recorded for each lot. Compliance with this stipulation must be addressed in the engineering plans submitted for drainage review when application is made for a permit to make improvements to the lot."

5.2.2.2 USE OF CREDITS BY PROJECTS WITHIN RIGHTS-OF-WAY

If a proposed project is located primarily within an established public or private right-of-way, implementation of flow control BMPs is optional. However, the applicant for such a project may wish to implement flow control BMPs within the right-of-way for the purposes of receiving BMP credits as described in Section 5.2.2 (p. 5-12). Since right-of-way is typically linear in shape (e.g., roads, railroads, trails, etc.), appropriate BMPs may include, but are not limited to, **Basic Dispersion** (e.g., a reversed sloped sidewalk per Appendix C, Section C.2.4.5), linear-shaped **Rain Gardens** (see Appendix C, Section C.2.5), or a **Permeable Pavement** (see Appendix C, Section C.2.6). To receive credit for these BMPs, the project must meet all of the following requirements:

1. The BMPs must serve **impervious surface** located only within the right-of-way.
2. If the right-of-way is **road right-of-way** that will be maintained by King County, the BMPs must be approved by the King County Department of Transportation through a **road variance** prior to engineering plan approval.
3. If the right-of-way will be privately maintained, provision must be made for future **maintenance** of the BMPs in accordance with Core Requirement #6, Section 1.2.6. As specified in Core Requirement #6, King County will assume maintenance of such BMPs in certain cases.
4. If King County will be assuming maintenance of the BMPs, the BMPs must comply with the drainage facility **financial guarantee and liability requirements** in Core Requirement #7, Section 1.2.7.

DRAFT

DRAFT

5.3 DETENTION FACILITIES

This section presents the methods, criteria, and details for design and analysis of detention facilities. These facilities provide for the temporary storage of increased surface water runoff resulting from development pursuant to the performance standards set forth in Core Requirement #3, "Flow Control" (see Section 1.2.3).

There are three primary types of detention facilities described in this section: detention ponds, tanks, and vaults. The information presented in this section is organized as follows:

Section 5.3.1, "Detention Ponds"
"Design Criteria," Section 5.3.1.1 (p. 5-18)
"Methods of Analysis," Section 5.3.1.2 (p. 5-30)

Section 5.3.2, "Detention Tanks"
"Design Criteria," Section 5.3.2.1 (p. 5-31)
"Methods of Analysis," Section 5.3.2.2 (p. 5-32)

Section 5.3.3, "Detention Vaults"
"Design Criteria," Section 5.3.3.1 (p. 5-35)
"Methods of Analysis," Section 5.3.3.2 (p. 5-36)

Section 5.3.4, "Control Structures"
"Design Criteria," Section 5.3.4.1 (p. 5-38)
"Methods of Analysis," Section 5.3.4.2 (p. 5-43)

Section 5.3.5, "Parking Lot Detention"

Section 5.3.6, "Roof Detention"

Section 5.3.7, "Simple Detention Pond for Cleared Areas"
"Design Criteria," Section 5.3.7.1 (p. 5-50)
"Methods of Analysis," Section 5.3.7.2 (p. 5-55)

DRAFT

5.3.1 DETENTION PONDS

Open ponds are the most desirable detention facilities for controlling runoff from developed areas. The design criteria in Section 5.3.1.1 are for detention ponds. However, many of the criteria also apply to infiltration ponds (Section 5.4.2), and water quality wetponds and combined detention/wetponds (Section 6.4).

Dam Safety Compliance

Detention ponds and other open impoundment facilities must comply with requirements for dam safety (WAC 173-175). Under current regulations (as of September 1998), if the impoundment has a storage capacity (including both water and sediment storage volumes) greater than 10 acre-feet above natural ground level and a dam height of more than 6 feet, then dam safety design and review are required by the Washington State Department of Ecology (WDOE). If the storage capacity is less than 10 acre-feet above natural ground level, then the facility is exempt from WDOE review. If the dam height is less than 6 feet but capacity is greater than 10 acre-feet, then WDOE reviews on a case-by-case-basis to determine the hazard potential downstream in the event of a failure.

5.3.1.1 DESIGN CRITERIA

Standard details for **detention ponds** are shown in Figure 5.3.1.A (p. 5-26) through Figure 5.3.1.D (p. 5-29). Control structure details are shown in Section 5.3.4 beginning on page 5-40.

General

1. Ponds must be designed as **flow-through systems** (however, parking lot storage may be utilized through a back-up system; see Section 5.3.5, p. 5-49). Developed flows must enter through a conveyance system separate from the control structure and outflow conveyance system. Maximizing distance between the inlet and outlet is encouraged to promote sedimentation.
2. **Pond bottoms shall be level** and be located a minimum of 0.5 feet below the inlet and outlet to provide sediment storage.
3. Outflow **control structures** shall be designed as specified in Section 5.3.4 (p. 5-38).
4. A **geotechnical analysis** and report may be required on slopes over 15%, or if located within 200 feet of the top of a ***steep slope hazard area*** or ***landslide hazard area***.

Side Slopes

1. For facilities to be maintained by King County, **interior side slopes** up to the emergency overflow water surface shall be no steeper than 3H:1V unless a fence is provided (see "Fencing," p. 5-20). See Section 6.4.4 for side slope requirements for internal berms in combined ponds and wetponds.
2. **Exterior side slopes** shall be no steeper than 2H:1V unless analyzed for stability by a geotechnical engineer.
3. **Pond walls** may be vertical retaining walls, provided: (a) they are constructed of reinforced concrete per Section 5.3.3 (p. 5-35); (b) a fence is provided along the top of the wall; (c) at least 25% of the pond perimeter will be a vegetated soil slope not steeper than 3H:1V; and (d) the design is stamped by a licensed structural civil engineer.
4. For **privately owned and maintained facilities**, the entire pond perimeter may be retaining walls, and building foundations may serve as one or more of the pond walls.

DRAFT

Embankments

1. Pond berm embankments higher than 6 feet shall require **design by a geotechnical engineer**.
2. For berm embankments 6 feet or less, the **minimum top width** shall be 6 feet, or as recommended by a geotechnical engineer.
3. Pond berm embankments must be **constructed on native consolidated soil** (or adequately compacted and stable fill soils analyzed by a geotechnical engineer) free of loose surface soil materials, roots, and other organic debris.
4. Pond berm embankments greater than 4 feet in height must be **constructed by excavating a key** equal to 50% of the berm embankment cross-sectional height and width. This requirement may be waived if specifically recommended by a geotechnical engineer.
5. The berm embankment shall be **constructed of soil** placed in 6-inch lifts **compacted** to at least 95% of maximum dry density, within 2 percentage points of the optimum moisture content, modified proctor method ASTM D1557, with the following soil characteristics: a minimum of 20% silt and clay, a maximum of 60% sand, a maximum of 60% silt and clay, with nominal gravel and cobble content. *Note: In general, excavated glacial till is well suited for berm embankment material.*
6. **Anti-seepage collars** must be placed on outflow pipes in berm embankments impounding water greater than 8 feet in depth at the design water surface.

Overflow

1. In all ponds, tanks, and vaults, a **primary overflow** (usually a riser pipe within the control structure; see Section 5.3.4.2, p. 5-43) must be provided to bypass the 100-year, 15-minute developed peak flow over or around the restrictor system. This assumes the facility will be full due to plugged orifices or high inflows; the primary overflow is intended to protect against breaching of a pond embankment (or overflows of the upstream conveyance system, in the case of a detention tank or vault). The design must provide controlled discharge directly into the downstream conveyance system or another acceptable discharge point.

2. A **secondary inlet** to the control structure must be provided in ponds as additional protection against overtopping should the inlet pipe to the control structure become plugged. A grated opening ("jailhouse window") in the control structure manhole functions as a weir (see Figure 5.3.1.B, p. 5-27) when used as a secondary inlet. *Note: The maximum circumferential length of this opening shall not exceed one-half the control structure circumference*. The "birdcage" overflow structure as shown in Figure 5.3.1.C (p. 5-28) may also be used as a secondary inlet.

Emergency Overflow Spillway

1. In addition to the above overflow requirements, ponds must have an emergency overflow spillway **sized to pass the 100-year, 15-minute developed peak flow** in the event of total control structure failure (e.g., blockage of the control structure outlet pipe) or extreme inflows. Emergency overflow spillways are intended to control the location of pond overtopping and direct overflows back into the downstream conveyance system or other acceptable discharge point.

2. Emergency overflow spillways must be provided for **ponds with constructed berms over 2 feet in height,** or for **ponds located on grades in excess of 5%.** As an option for ponds with berms less than 2 feet in height and located at grades less than 5%, emergency overflow may be provided by an **emergency overflow structure**, such as a Type II manhole fitted with a birdcage as shown in Figure 5.3.1.C (p. 5-28). The emergency overflow structure must be designed to pass the 100-year developed peak flow, with a minimum 6 inches of freeboard, directly to the downstream conveyance system or another acceptable discharge point. Where an emergency overflow spillway would discharge to a slope steeper than 15%, consideration should be given to providing an emergency overflow structure *in addition to* the spillway.

3. The emergency overflow spillway shall be **armored with riprap** in conformance with Table 4.2.2.A. The spillway shall be armored full width, beginning at a point midway across the berm embankment and extending downstream to where emergency overflows re-enter the conveyance system (see Figure 5.3.1.B, p. 5-27).

4. Design of emergency overflow spillways requires the analysis of a broad-crested trapezoidal weir as described in Section 5.3.1.2 (p. 5-30). Either one of the weir sections shown in Figure 5.3.1.B (p. 5-27) may be used.

Access Requirements

1. **Maintenance access road(s)** shall be provided to the control structure and other drainage structures associated with the pond (e.g., inlet, emergency overflow or bypass structures). Manhole and catch basin lids must be in or at the edge of the access road and at least three feet from a property line. Rims shall be set at the access road grade.

2. An **access ramp** is required for removal of sediment with a trackhoe and truck. The ramp must extend to the pond bottom if the pond bottom is greater than 1500 square feet (measured without the ramp) and it may end at an elevation 4 feet above the pond bottom, if the pond bottom is less than 1,500 square feet (measured without the ramp), provided the pond side slopes are 3:1 or flatter.

   Intent: On large, deep ponds, truck access to the pond bottom via an access ramp is necessary so loading can be done in the pond bottom. On small deep ponds, the truck can remain on the ramp for loading. On small shallow ponds, a ramp to the bottom may not be required if the trackhoe can load a

DRAFT

truck parked at the pond edge or on the internal berm of a wetpond or combined pond (trackhoes can negotiate interior pond side slopes).

3. The **internal berm** of a wetpond or combined detention and wetpond may be used for access if it is no more than 4 feet above the first wetpool cell, if the first wetpool cell is less than 1500 square feet (bottom area measured without the ramp), and if it is designed to support a loaded truck, considering the berm is normally submerged and saturated.
4. **Access ramps** shall meet the requirements for design and construction of access roads specified below.
5. All control structures shall have round, solid **locking lids** with $^5/_8$-inch diameter Allen head cap screws (see *KCRS* Drawing No. 2-022 and 2-023).
6. Access shall be limited by a double-posted gate if a fence is required, or by **bollards**—that is, two fixed bollards on each side of the access road and two removable bollards equally located between the fixed bollards.

Design of Access Roads

Access roads shall meet the following design criteria:

1. **Maximum grade** shall be 15% for asphalt paving and 12% for gravel or modular grid paving.
2. Outside **turning radius** shall be 40 feet, minimum.
3. **Fence gates** shall be located only on straight sections of road.
4. Access roads shall be 15 feet in **width** on curves and 12 feet on straight sections.
5. A **paved apron** shall be provided where access roads connect to paved public roadways. The apron shall be consistent with driveway details in *KCRS*.

Construction of Access Roads

Access roads shall be constructed with an asphalt, concrete or gravel surface, or modular grid pavement. Access roads must conform to King County road design and construction standards for residential minor access streets. Modular grid pavement shall meet manufacturer's specifications.

DRAFT

Fencing

1. A fence is **required** at the emergency overflow water surface elevation, or higher, **where a pond interior side slope is steeper than 3H:1V,** or where the impoundment is a wall greater than 24 inches in height. The fence need only be constructed for those slopes steeper than 3H:1V.

   Intent: To discourage access to portions of a pond where steep side slopes (steeper than 3:1) increase the potential for slipping into the pond, and to guide those who have fallen into a pond to side slopes that are flat enough (flatter than 3:1 and unfenced) to allow for easy escape.

2. For **privately owned and maintained facilities**, fences are recommended, but not required, for slopes steeper than 3:1. Note, however, that other regulations such as the Uniform Building Code may require fencing of vertical walls. Fence material and construction specifications outlined below do not apply to private facilities.
3. Fences shall be 6 feet in **height**. For example designs, see WSDOT Standard Plan L-2, Type 1 or Type 3 chain link fence.

   Exception: The fence may be a minimum of 4 feet in height if the depth of the impoundment (measured from the lowest elevation in the bottom of the impoundment, directly adjacent to the bottom of the fenced slope, up to the emergency overflow water surface) is 5 feet or less. For example designs, see WSDOT Standard Plan L-2, Type 4 or Type 6 chain link fence.

4. **Access road gates** shall be 16 feet in width consisting of two swinging sections 8 feet in width. Additional vehicular access gates may be required as needed to facilitate maintenance access.
5. **Pedestrian access gates** (if needed) shall be 4 feet in width.
6. For fences to be maintained by the County, **fence material** shall be vertical metal balusters or 9 gauge galvanized steel fabric with bonded vinyl coating. For steel fabric fences, the following apply:
   a) **Vinyl coating** shall be compatible with the surrounding environment (e.g., green in open, grassy areas and black or brown in wooded areas). All posts, cross bars, and gates shall be painted or coated the same color as the vinyl clad fence fabric.
   b) **Fence posts and rails** shall conform to WSDOT Standard Plan L-2 for Types 1, 3, or 4 chain link fence.
7. For **metal baluster fences**, Uniform Building Code standards shall apply.
8. **Wood fences are allowed** in subdivisions where the fence will be maintained by homeowners associations or adjacent lot owners. Fence maintenance requirements shall be a condition of subdivision approval, and a statement detailing maintenance responsibilities and requirements must be recorded with the plat.
9. Wood fences shall have **pressure treated posts** (ground contact rated) either set in 24-inch deep concrete footings or attached to footings by galvanized brackets. Rails and fence boards shall be cedar or pressure-treated fir or hemlock.
10. Where only **short stretches of the pond perimeter** (< 10%) have side slopes steeper than 3:1, split rail fences (3-foot minimum height) or densely planted thorned hedges (e.g., barberry, holly, etc.) may be used in place of a standard fence.

DRAFT

Signage

Detention ponds, infiltration ponds, wetponds, and combined ponds to be maintained by King County shall have a sign placed for maximum visibility from adjacent streets, sidewalks, and paths. The sign shall meet the design and installation requirements illustrated in Figure 5.3.1.D (p. 5-29).

Right-of-Way

1. Open detention ponds shall not be located in dedicated public road right-of-way.
2. Detention ponds to be maintained by King County shall be in a tract dedicated to King County (see Section 1.2.6). Any tract not abutting public right-of-way will require a 15-foot wide extension of the tract to an acceptable access location.

Setbacks

1. A setback of 5 feet from the **toe of the exterior slope**, retaining walls and rockeries to the tract or property line is required for County-maintained ponds and recommended for privately maintained ponds.
2. The tract or property line on a detention pond cut slope shall be setback 5 feet from the **emergency overflow water surface**.
3. The detention pond water surface at the pond outlet invert elevation shall be setback 100 feet from **proposed or existing septic system drainfields**. This setback may be reduced with written approval of the Seattle-King County Department of Public Health.

Seeps and Springs

Intermittent seeps along cut slopes are typically fed by a shallow groundwater source (interflow) flowing along a relatively impermeable soil stratum. These flows are storm driven and should discontinue after a few weeks of dry weather. The KCRTS model accounts for this shallow groundwater component, and no

special provisions are needed when directing these flows through the flow control facility. However, more continuous seeps and springs, which extend through longer dry periods, are likely from a deeper groundwater source. When continuous flows are intercepted and directed through flow control facilities, adjustments to the approved facility design may be required to account for the additional base flow (unless already considered in design). If uncertain at the time of construction, the situation may be monitored while the facility is under maintenance and defect financial guarantee. Adjustments to the facility may be required prior to the release of the financial guarantee.

Planting Requirements

Exposed earth on the pond bottom and interior side slopes shall be sodded or seeded with an appropriate seed mixture. All remaining areas of the tract must either be planted with grass, or be landscaped in accordance with the standards below and mulched with a 4-inch cover of hog fuel or shredded wood mulch.[7]

Landscaping

Landscaping for aesthetic purposes is encouraged, but not required, for most stormwater tract areas containing ponds maintained by King County (see below for areas not to be landscaped). However, if provided, landscaping must adhere to the criteria that follow so as not to hinder maintenance operations. Landscaped stormwater tracts may, in some instances, be used to satisfy requirements for recreational space. In other instances, "naturalistic" stormwater facilities may be placed in open space tracts. For more information, see page 5-25.

If landscaping is proposed in the stormwater tract of a County-maintained pond, the following requirements shall apply:

1. **No trees or shrubs may be planted within 10 feet of inlet or outlet pipes** or manmade drainage structures such as catch basins, spillways or flow spreaders. Species with roots that seek water, such as willow or poplar, should be avoided within 50 feet of pipes or manmade structures.
2. **Planting is restricted on berms that impound water** either permanently or temporarily during storms. *Note: This restriction does not apply to cut slopes that form pond banks, only to berms.*
   a) Trees or shrubs may not be planted on portions of water-impounding berms taller than four feet high. Only grasses may be planted on berms taller than four feet.

      Intent: Grasses allow unobstructed visibility of berm slopes for detecting potential dam safety problems such as animal burrows, slumping, or fractures in the berm.

   b) Trees planted on portions of water-impounding berms less than 4 feet high must be small, not higher than 20 feet mature height, and have a fibrous root system. Table 5.3.1.A gives some examples of trees with these characteristics.

      Intent: These trees reduce the likelihood of blow-down trees, or the possibility of channeling or piping of water through the root system, which may contribute to dam failure on berms that retain water.
3. All landscape material, including grass, must be **planted in good topsoil**. Native underlying soils may be made suitable for planting if amended with 2 inches of well-rotted compost tilled into the top six inches of soil. Compost used should meet Ecology publication 94-38 specifications for Grade A compost quality.
4. Soil in which **trees or shrubs** are planted may require additional enrichment or additional compost top-dressing. Consult a nurseryman, landscape professional, or arborist for site-specific recommendations.

DRAFT

[7] Shredded wood mulch is made from shredded tree trimmings, usually from trees cleared onsite. It must be free of garbage and weeds and may not contain excessive resin, tannin, or other material detrimental to plant growth.

5. For a naturalistic effect as well as ease of maintenance, trees or shrubs must be **planted in clumps** to form "*landscape islands*" rather than evenly spaced.
6. The **landscaped islands** must be planted above the 100-year water surface and must be a minimum of six feet apart, and if set back from fences or other barriers, the setback distance must also be a minimum of six feet. Where tree foliage extends low to the ground, the six feet of setback should be counted from the outer drip line of the trees (estimated at maturity).

   Intent: This landscape design must allow a 6-foot wide mower to pass around and between clumps.
7. Evergreen trees and trees that produce relatively little leaf-fall such as Oregon ash, mimosa, or locust are preferred. Large-leaf deciduous trees may not be planted where branches could extend over interior pond slopes.
8. All trees shall be set back so branches do not extend over the 100-year water surface of the pond to prevent leaf-drop into the water.
9. Drought tolerant species are recommended.
10. Landscape areas within the tracts of County-maintained ponds in residential subdivision developments shall be designated "to be maintained by the homeowner's association."

TABLE 5.3.1.A SMALL TREES AND SHRUBS WITH FIBROUS ROOTS

Small Trees / High Shrubs	Low Shrubs
*Red twig dogwood (*Cornus stolonifera*)	*Snowberry (*Symphoricarpus albus*)
*Serviceberry (*Amelanchier alnifolia*)	*Salmonberry (*Rubus spectabilis*)
Strawberry tree (*Arbutus unedo*)	*Rosa rugosa* (avoid spreading varieties)
Highbush cranberry (*Vaccinium opulus*)	Rock rose (*Cistus* spp.)
Blueberry (*Vaccinium* spp.)	Ceanothus spp. (choose hardier varieties)
*Filbert (*Corylus cornuta*, others)	New Zealand flax (*Phormium penax*)
Fruit trees on dwarf rootstock	
Rhododendron (native and ornamental varieties)	Ornamental grasses (e.g., *Miscanthis*, *Pennisetum)*
* *Native species*	

DRAFT

Guidelines for Naturalistic Planting

Stormwater facilities may sometimes be located within open space tracts if "natural appearing" (see page 5-25 for details). Two generic kinds of naturalistic planting are outlined below, but other options are also possible. A booklet discussing stormwater ponds and landscaping possibilities is available at the Water and Land Resources Division; when completed, it should be consulted for additional ideas. Native vegetation is preferred in naturalistic plantings.

Note: These landscaping criteria must be followed unless a landscape professional judges that long-term quality of the open space would be improved by deviating from the criteria, AND that if the facility is maintained by the County, maintenance would not be made more difficult by the deviations.

Open Woodland

In addition to the general landscaping criteria above, the following requirements must be met:

1. Landscaped islands (when mature) should cover a minimum of 30% or more of the tract, exclusive of the pond area.
2. Tree clumps should be underplanted with shade-tolerant shrubs and groundcover plants. The goal is to provide a dense understory that need not be weeded or mowed.
3. Landscaped islands should be placed at several elevations rather than "ring" the pond, and the size of clumps should vary from small to large to create variety.
4. Not all islands need have trees. Shrub or groundcover clumps are acceptable, but lack of shade should be considered in selecting vegetation.

Note: Landscaped islands are best combined with the use of hog fuel or shredded wood mulch for erosion control (only for slopes above the flow control water surface). It is often difficult to sustain a low-maintenance understory if the area was previously hydroseeded.

Northwest Savannah or Meadow

In addition to the general landscape criteria above, the following requirements must be met:

1. Landscape islands (when mature) should cover 10% or more of the tract, exclusive of the pond area.
2. Planting groundcovers and understory shrubs is encouraged to eliminate the need for mowing under the trees when they are young.
3. Landscape islands should be placed at several elevations rather than "ring" the pond.
4. The remaining tract area should be planted with an appropriate grass seed mix, which may include northwest meadow or wildflower species. Native or dwarf grass mixes are preferred. Table 5.3.1.B below gives one acceptable dwarf grass mix. Grass seed should be applied at 2.5 to 3 pounds per 1000 square feet. *Note: Amended soil or good topsoil is required for all plantings.*
5. Creation of areas of emergent vegetation in shallow areas of the pond is recommended. Native wetland plants, such as sedges (*Carex* sp.), bulrush (*Scirpus* sp.), water plantain (*Alisma* sp.), and burreed (*Sparganium sp.*) are recommended. If the pond does not hold standing water, a clump of wet-tolerant, non-invasive shrubs, such as salmonberry or snowberry, is recommended below the detention design water surface.

Note: This landscape style is best combined with the use of grass or sod for site stabilization and erosion control.

DRAFT

TABLE 5.3.1.B STORMWATER TRACT "LOW-GROW" SEED MIX

Seed Name	Percentage of Mix
Dwarf tall fescue	40%
Dwarf perennial rye "Barclay" *	30%
Red fescue	25%
Colonial bentgrass	5%

* If wildflowers are used and sowing is done before Labor Day, the amount of dwarf perennial rye may be reduced proportionately to the amount of wildflower seed used.

Detention Ponds in Recreational Tracts

Projects required to provide onsite recreational space per KCC 21A.14.180 may combine the detention pond tract with the recreation space tract to receive a 50% reduction in required onsite recreational space. To receive the 50% credit, the following criteria must be met as required by KCC 21A.14.180.D:

1. The proposed stormwater tract must be dedicated or reserved as a part of a recreational space tract.
2. The stormwater pond must be constructed to meet the following requirements:
   a) Side slopes shall not exceed 33 percent unless they are existing, natural, and covered with vegetation.
   b) A bypass system or an emergency overflow pathway shall be designed to handle flow exceeding the facility design and located so that it does not pass through active recreation areas or present a safety hazard.
   c) The stormwater pond shall be landscaped in a manner to enhance passive recreational opportunities such as trails and aesthetic viewing.
   d) The stormwater pond shall be designed so that it does not require fencing per the fencing requirements on page 5-20.
3. Where a tract is jointly used for recreational space and King County maintained drainage facilities, the County is only responsible for maintenance of the drainage facilities, and an access easement shall be provided for that purpose.

Detention Ponds in Open Space

Open space areas reserved through the **four-to-one program** may be used to site "natural appearing" stormwater facilities if they are found to be compatible with the open space value and functions, and if they are located on a "small portion of the open space" (Amended policy I-204, King County Comprehensive Plan). Conscientious application of the "Guidelines for Naturalistic Plantings" (p. 5-23) typically will produce natural-appearing stormwater facilities. A site-specific assessment is needed, however, to determine whether the stormwater tract would be compatible with the open space value and functions.

DRAFT

FIGURE 5.3.1.A TYPICAL DETENTION POND

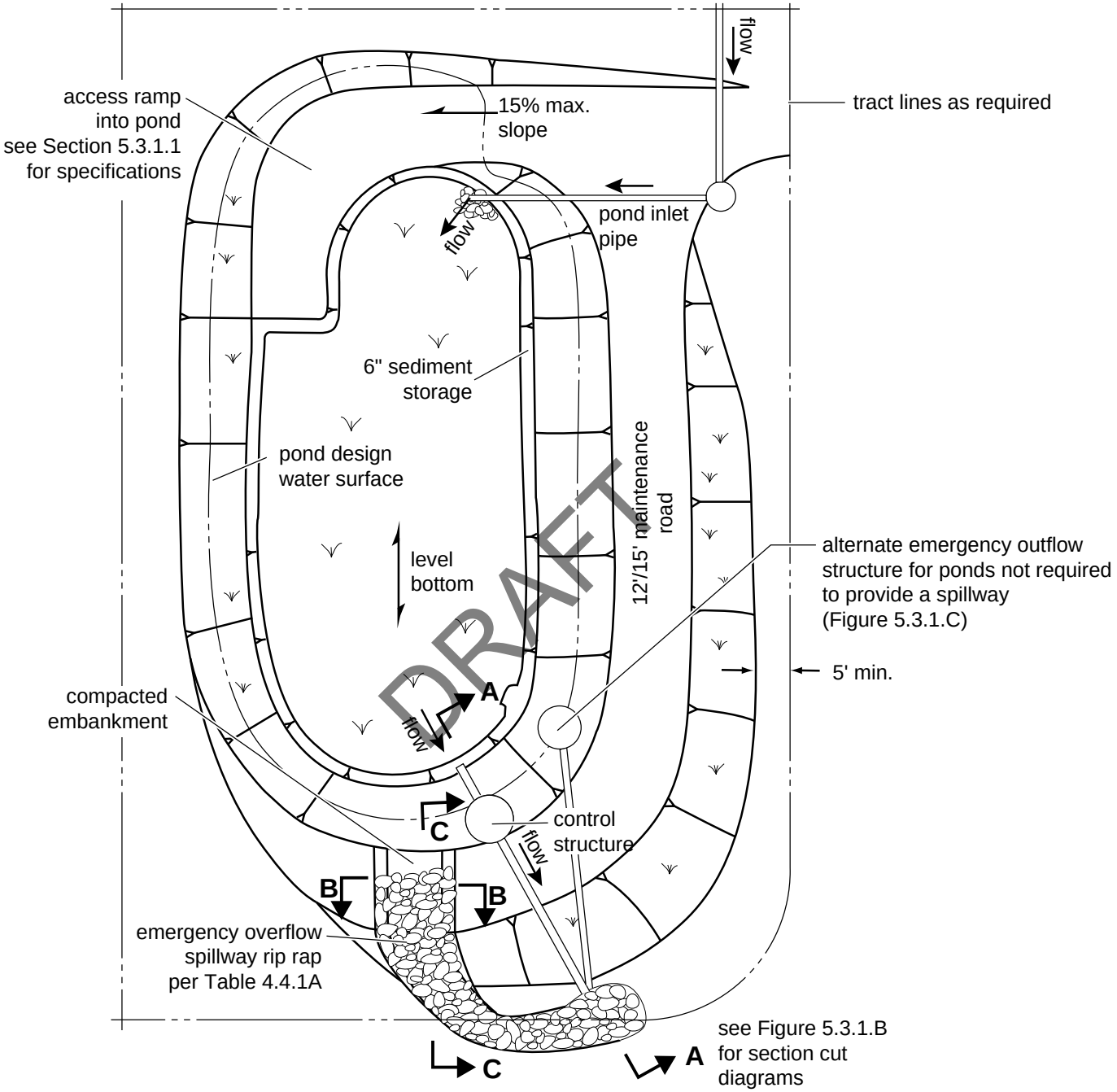

DRAFT

NOTE:
This detail is a schematic representation only. Actual configuation will vary depending on specific site constraints and applicable design criteria.

FIGURE 5.3.1.B TYPICAL DETENTION POND SECTIONS

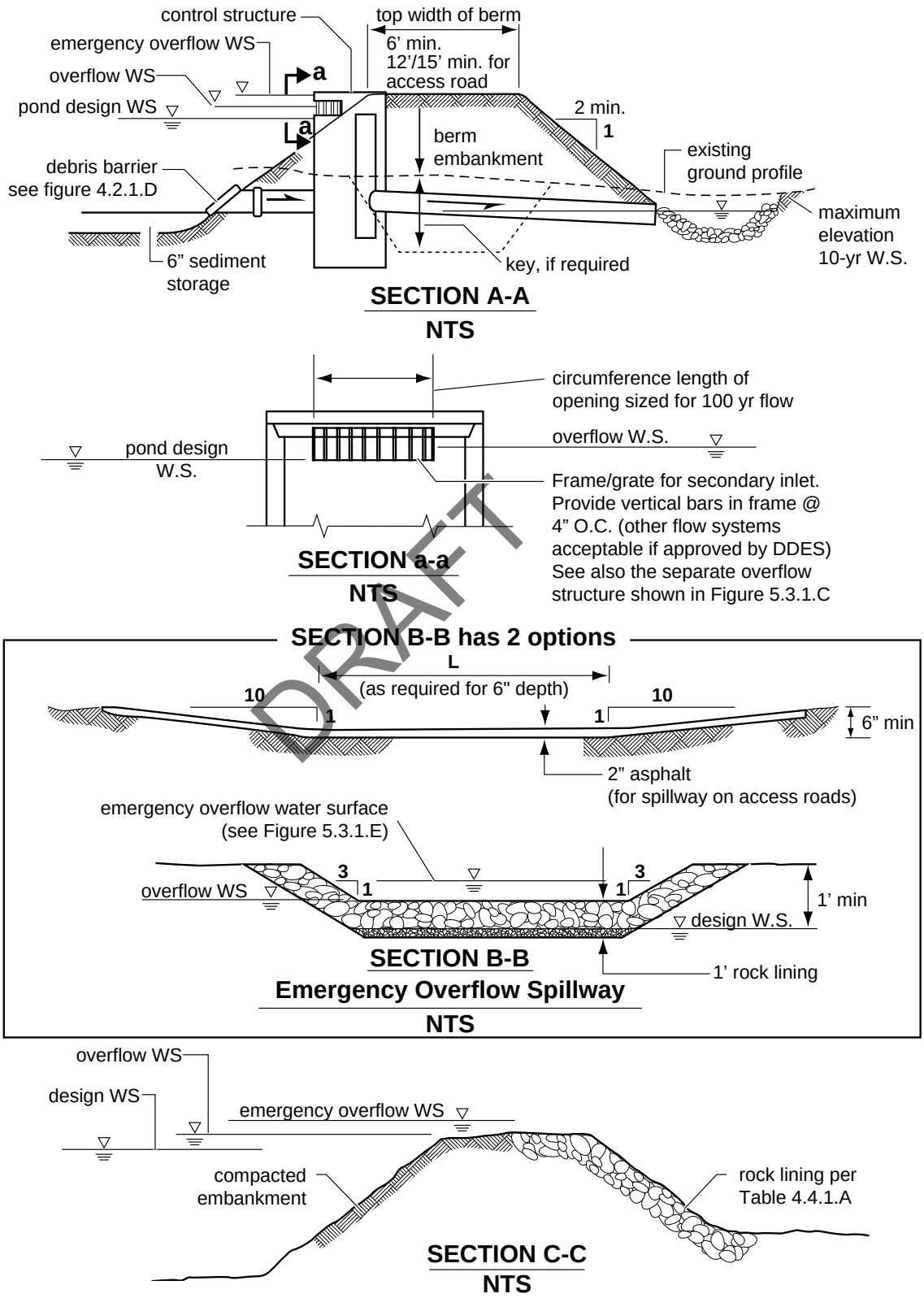

DRAFT

FIGURE 5.3.1.C OVERFLOW STRUCTURE

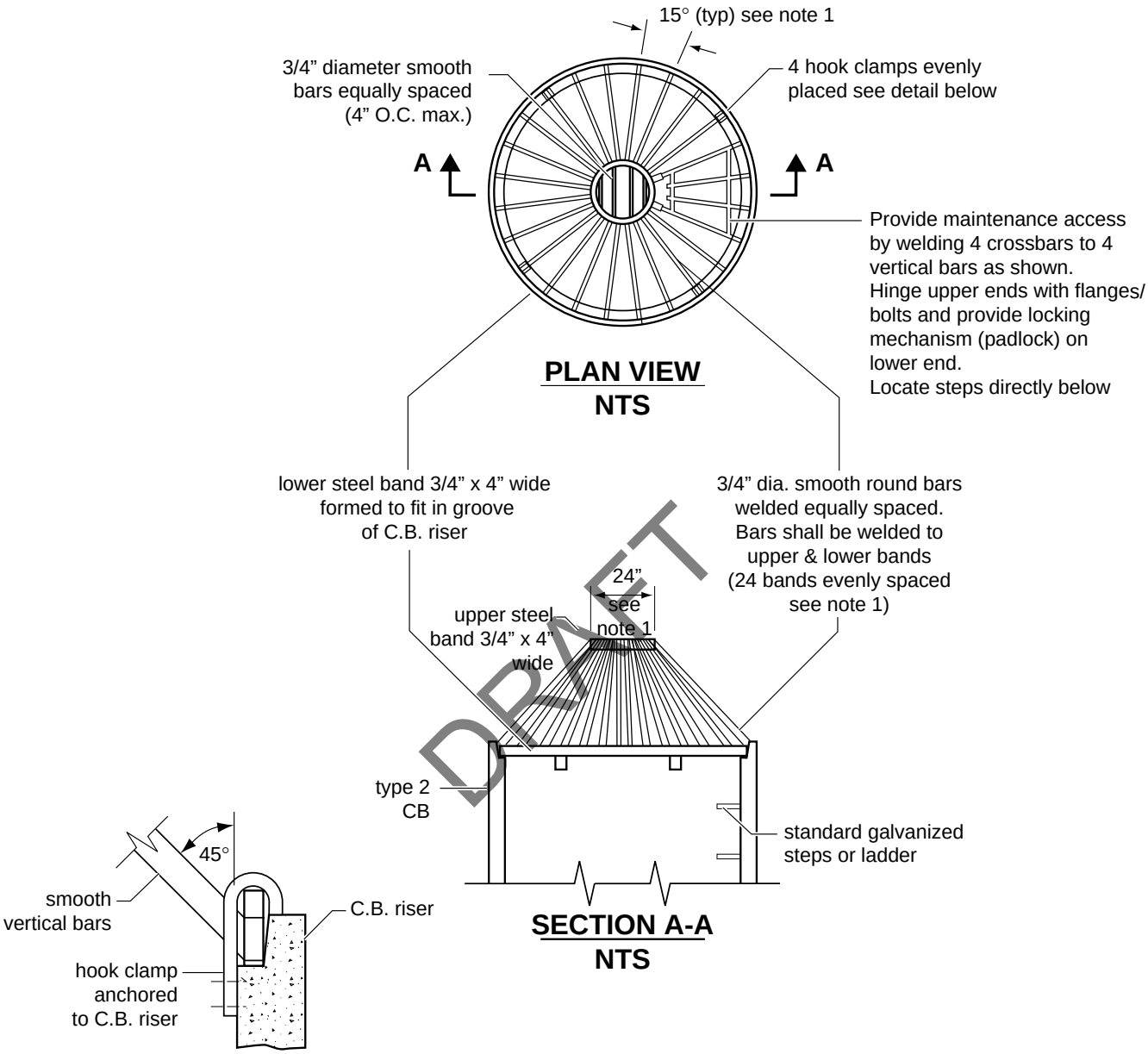

DRAFT

NOTES:

1. Dimensions are for illustration on 54" diameter CB For different diameter CB's adjust to maintain 45° angle on "vertical" bars and 7" o.c. maximum spacing of bars around lower steel band.
2. Metal parts must be corrosion resistant; steel bars must be galvanized.
3. This debris barrier is also recommended for use on the inlet to roadway cross-culverts with high potential for debris collection (except on type 2 streams)
4. This debris barrier is for use outside of road right-of-way only. For debris cages within road right-of-way, see Drawing 2-028 KCRS.

FIGURE 5.3.1.D PERMANENT SURFACE WATER CONTROL POND SIGN

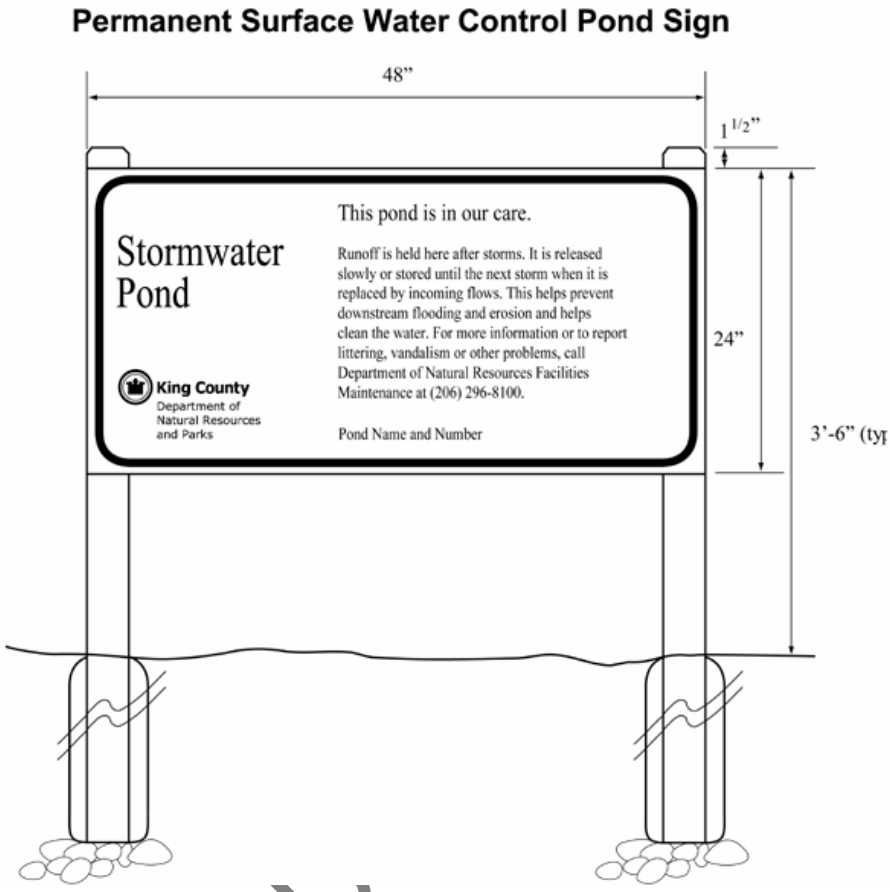

SPECIFICATIONS:

Size: 48 inches by 24 inches

Material: 0.125-gauge aluminum

Face: Non-reflective vinyl or 3 coats outdoor enamel (sprayed).

Lettering: Silk screen enamel where possible, or vinyl letters.

Colors: Beige background, teal letters.

Type face: Helvetica condensed. Title: 3 inch; Sub-Title: $1^1/_2$-inch; Text: 1 inch; Outer border: $^1/_8$ inch border distance from edge: $^1/_4$-inch; all text $1^3/_4$-inch from border.

Posts: Pressure treated, beveled tops, $1^1/_2$-inch higher than sign.

Installation: Secure to chain link fence if available. Otherwise install on two 4"x4" posts, pressure treated, mounted atop a gravel bed, installed in 30-inch concrete filled post holes (8-inch minimum diameter), with the top of sign no higher than 42 inches from ground surface.

Placement: Face sign in direction of primary visual or physical access. Do not block any access road. Do not place within 6 feet of structural facilities (e.g. manholes, spillways, pipe inlets).

Note: If the facility has a liner to restrict infiltration of stormwater, the following note must be added to the face of the sign: "This facility is lined to protect groundwater quality." In addition, specific information about the liner must be added to the back of the sign as specified in Section 6.2.4.

5.3.1.2 METHODS OF ANALYSIS

Detention Volume and Outflow

The volume and outflow design for detention ponds shall be in accordance with the performance requirements in Chapter 1 and the hydrologic analysis and design methods in Chapter 3. Restrictor orifice structure design shall comply with Section 5.3.4 (p. 5-38). *Note: The **design water surface elevation** is the highest elevation that occurs in order to meet the required outflow performance for the pond.*

Detention Ponds in Infiltrative Soils

Detention ponds may occasionally be sited on till soils that otherwise meet the basic criteria of "**sufficient permeable soil**" for a properly functioning infiltration system (see Section 5.4.1, p. 5-59). These detention ponds have a surface discharge and may also utilize infiltration as a second pond outflow. Detention ponds sized with infiltration as a second outflow must meet all the requirements of Section 5.4 for infiltration ponds, including a soils report, performance testing, groundwater protection, presettling, and construction techniques.

Emergency Overflow Spillway Capacity

The emergency overflow spillway weir section shall be designed to pass the 100-year runoff event for developed conditions assuming a broad-crested weir. The **broad-crested weir equation** for the spillway section in Figure 5.3.1.E, for example, would be:

$$Q_{100} = C\,(2g)^{1/2}\,[{}^{2}/_{3}\,LH^{3/2} + {}^{8}/_{15}\,(\text{Tan}\,\theta)\,H^{5/2}] \qquad (5\text{-}1)$$

where
- Q_{100} = peak flow for the 100-year runoff event (fps)
- C = discharge coefficient (0.6)
- g = gravity (32.2 ft/sec^2)
- L = length of weir (ft)
- H = height of water over weir (ft)
- θ = angle of side slopes

Assuming C = 0.6 and Tan θ = 3 (for 3:1 slopes), the equation becomes:

$$Q_{100} = 3.21\,(LH^{3/2} + 2.4\,H^{5/2}) \qquad (5\text{-}2)$$

To find width L for the weir section, the equation is rearranged to use the computed Q_{100} and trial values of H (0.2 feet minimum):

$$L = [Q_{100} / (3.21\,H^{3/2})] - 2.4\,H \quad \text{or} \quad 6 \text{ feet minimum} \qquad (5\text{-}3)$$

FIGURE 5.3.1.E WEIR SECTION FOR EMERGENCY OVERFLOW SPILLWAY

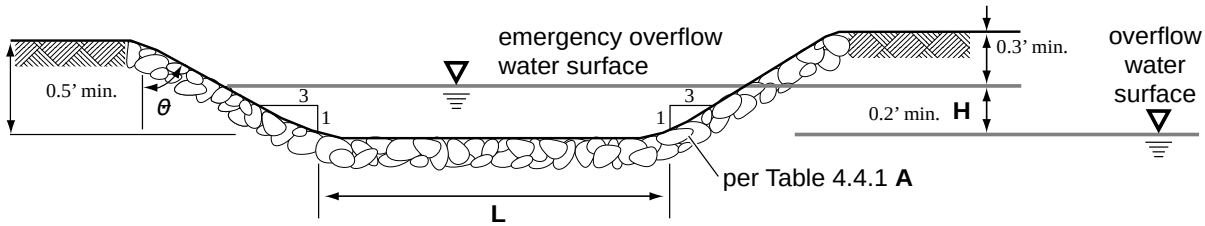

DRAFT

5.3.2 DETENTION TANKS

Detention tanks are underground storage facilities typically constructed with large diameter corrugated metal pipe. Standard detention tank details are shown in Figure 5.3.2.A (p. 5-33) and Figure 5.3.2.B (p. 5-34). Control structure details are shown in Section 5.3.4 beginning on page 5-38.

5.3.2.1 DESIGN CRITERIA

General

1. Tanks shall be designed as **flow-through systems with manholes in line** (see Figure 5.3.2.A, p. 5-33) to promote sediment removal and facilitate maintenance.

   Exception: Tanks may be designed as **back-up systems** if preceded by water quality facilities since little sediment should reach the inlet/control structure and low head losses can be expected because of the proximity of the inlet/control structure to the tank.

2. The detention tank bottom shall be located 0.5 feet below the inlet and outlet to provide dead storage for sediment.

3. The **minimum pipe diameter** allowed for a detention tank is 36 inches.

4. Tanks larger than 36 inches may be connected to each adjoining structure with a short section (2-foot maximum length) of 36-inch minimum diameter pipe.

5. Outflow **control structures** shall be as detailed in Section 5.3.4 (p. 5-38). *Note: Control and access manholes shall have additional ladder rungs to allow ready access to all tank access pipes when the catch basin sump is filled with water (see Figure 5.3.4.A, plan view, p. 5-40).*

DRAFT

Materials

Pipe material, joints, and protective treatment for tanks shall be in accordance with Sections 7.04 and 9.05 of the *WSDOT/APWA Standard Specification* as modified by the *King County Road Standards* and AASHTO designations. Such materials include the following:

- Lined corrugated polyethylene pipe (LCPE)
- Aluminized Type 2 corrugated steel pipe and pipe arch (meets AASHTO designations M274 and M36)
- Corrugated or spiral rib aluminum pipe and pipe arch
- Reinforced concrete pipe
- Narrow concrete vaults (see Section 5.3.3, p. 5-35).
- Corrugated steel pipe and pipe arch, Aluminized or Galvanized[8] with treatments 1 through 6
- Spiral rib steel pipe, Aluminized or Galvanized with treatments 1 through 6
- Structural plate pipe and pipe arch, Aluminized or Galvanized with treatments 1 through 6

Structural Stability

Tanks shall meet structural requirements for overburden support and traffic loading if appropriate. H-20 live loads must be accommodated for tanks lying under parking areas and access roads. The *King County Roads Standards* may have different live load requirements for structures located under roadways. Metal

[8] Galvanized metals leach zinc into the environment, especially in standing water situations. High zinc concentrations, sometimes in the range that can be toxic to aquatic life, have been observed in the region. Therefore, use of galvanized materials should be avoided. Where other metals, such as aluminum or stainless steel, or plastics are available, they shall be used. If these materials are not available, asphalt coated galvanized materials may then be used.

tank end plates must be designed for structural stability at maximum hydrostatic loading conditions. Flat end plates generally require thicker gage material than the pipe and/or require reinforcing ribs.

Tanks shall be placed on stable, well consolidated native material with a suitable bedding. Backfill shall be placed and compacted in accordance with the pipe specifications in Chapter 4. Tanks made of LCPE require inspection for deformation prior to installation as well as continuous inspection of backfilling to one foot above the top of the tank. Tanks shall not be allowed in fill slopes, unless analyzed in a geotechnical report for stability and constructability.

Buoyancy

In moderately pervious soils where seasonal groundwater may induce flotation, buoyancy tendencies must be balanced either by ballasting with backfill or concrete backfill, providing concrete anchors, increasing the total weight, or providing subsurface drains to permanently lower the groundwater table. Calculations must be submitted that demonstrate stability.

Access Requirements

1. The **maximum depth** from finished grade to tank invert shall be 20 feet.
2. **Access openings** shall be positioned a maximum of 50 feet from any location within the tank.
3. All tank access openings shall have round, solid **locking lids** with $^{5}/_{8}$-inch diameter Allen head cap screws (see *KCRS* Drawing No. 2-022 and 2-023).
4. Thirty-six-inch minimum diameter **CMP riser-type manholes** (Figure 5.3.2.B, p. 5-34) of the same gage as the tank material may be used for access along the length of the tank and at the upstream terminus of the tank if a backup system. The top slab is separated (1-inch minimum gap) from the top of the riser to allow for deflections from vehicle loadings without damaging the riser tank.
5. All tank access openings must be readily **accessible by maintenance vehicles**.

DRAFT

Access Roads

Access roads are required to all detention tank control structures and risers. The access roads shall be designed and constructed **as specified for detention ponds** in Section 5.3.1 (p. 5-20).

Right-of-Way

Detention tanks to be maintained by King County but not located in King County right-of-way shall be in a tract dedicated to King County. Any tract not abutting public right-of-way will require a 15-foot wide extension of the tract to accommodate an access road to the facility.

Setbacks

Setbacks (easement/tract width) and building setback lines (BSBLs) for tanks shall be the same as for pipes (see Section 4.1).

5.3.2.2 METHODS OF ANALYSIS

Detention Volume and Outflow

The volume and outflow design for **detention tanks** shall be in accordance with the performance requirements in Chapter 1 and the hydrologic analysis and design methods in Chapter 3. Restrictor and orifice design shall be according to Section 5.3.4 (p. 5-38).

FIGURE 5.3.2.A TYPICAL DETENTION TANK

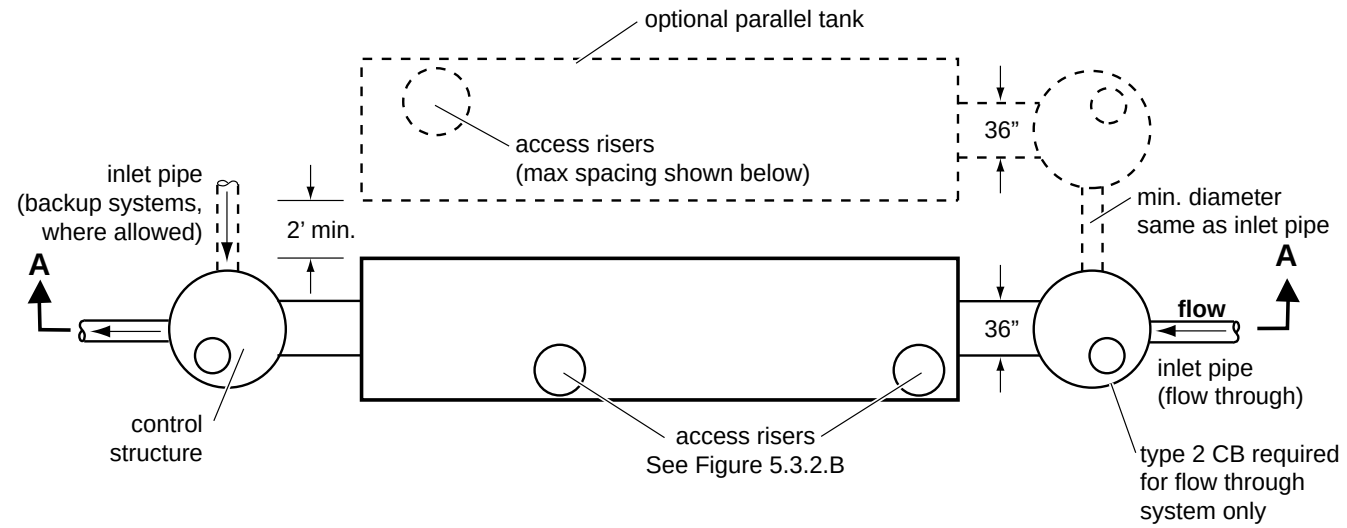

PLAN VIEW
NTS
“Flow-through” system shown solid.
Designs for “flow backup” system and
parallel tanks shown dashed

DRAFT

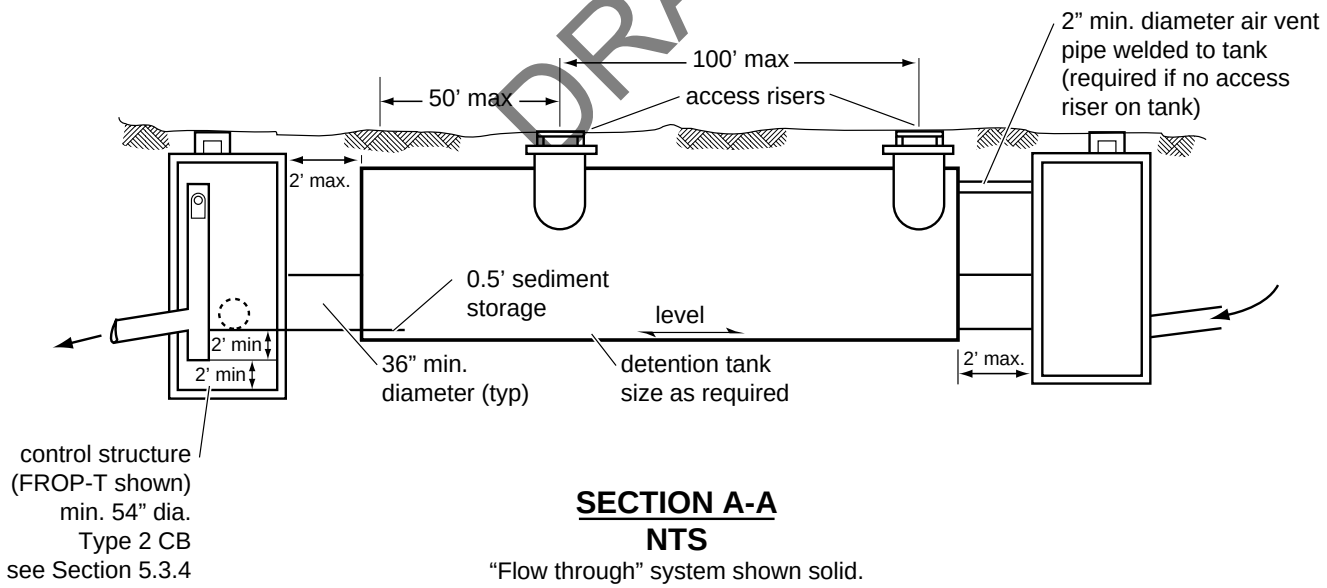

SECTION A-A
NTS
“Flow through” system shown solid.

NOTE:
All metal parts corrosion resistant.
Steel parts galvanized and asphalt
coated (Treatment 1 or better).

FIGURE 5.3.2.B DETENTION TANK ACCESS DETAIL

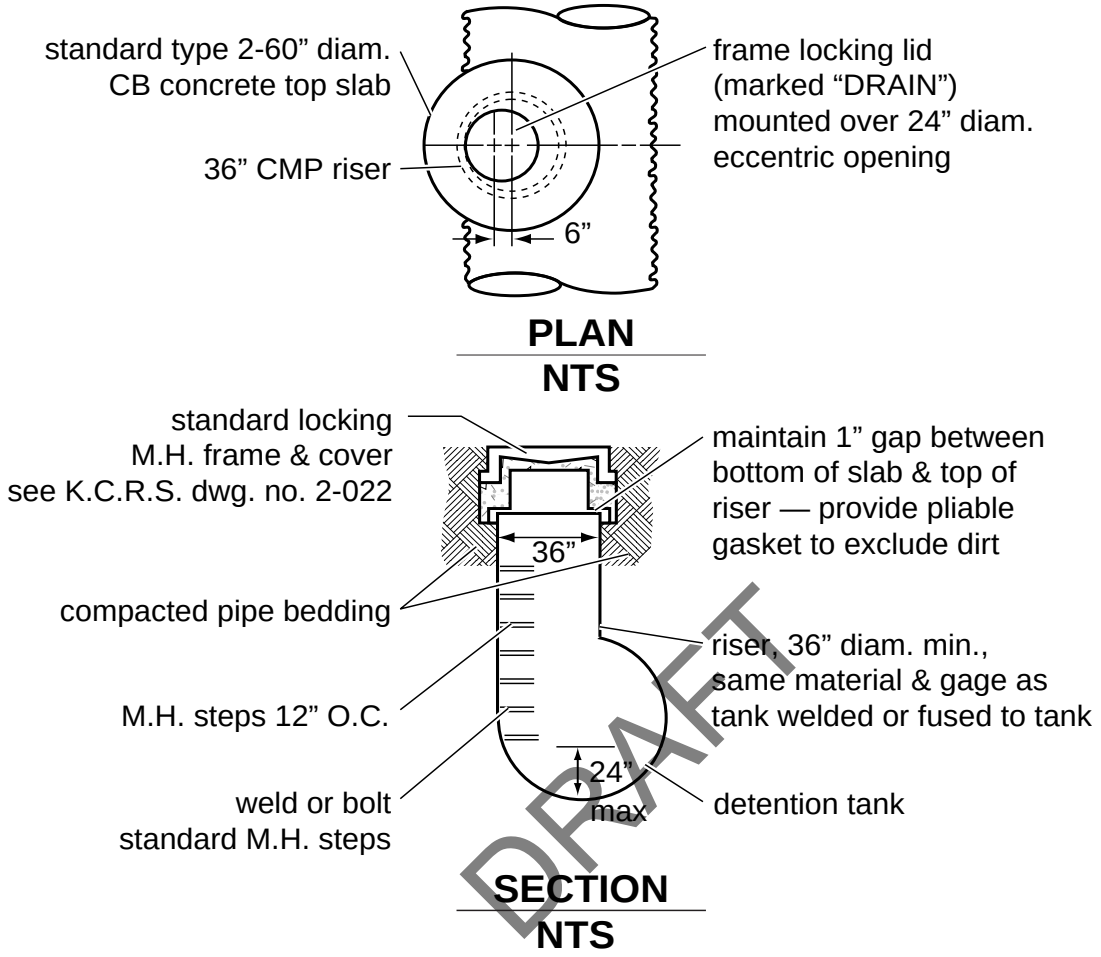

DRAFT

NOTES:

1. Use adjusting blocks as required to bring frame to grade.
2. All materials to be aluminum or galvanized and asphalt coated (Treatment 1 or better).
3. Must be located for access by maintenance vehicles.
4. May substitute WSDOT special Type IV manhole (RCP only).

5.3.3 DETENTION VAULTS

Detention vaults are box-shaped underground storage facilities typically constructed with reinforced concrete. A standard detention vault detail is shown in Figure 5.3.3.A (p. 5-37). Control structure details are shown in Section 5.3.4 beginning on page 5-38.

5.3.3.1 DESIGN CRITERIA

General

1. Detention vaults shall be designed as **flow-through systems** with bottoms level (longitudinally) or sloped toward the inlet to facilitate sediment removal. Distance between the inlet and outlet shall be maximized (as feasible).
2. The detention **vault bottom** shall slope at least 5% from each side towards the center, forming a broad "v" to facilitate sediment removal. *Note: More than one "v" may be used to minimize vault depth*.

   Exception: The vault bottom may be flat if **removable panels** are provided over the entire vault. Removable panels shall be at grade, have stainless steel lifting eyes, and weigh no more than 5 tons per panel.
3. The **invert elevation of the outlet** shall be elevated above the bottom of the vault to provide an average 6 inches of sediment storage over the entire bottom. The outlet must also be elevated a minimum of 2 feet above the orifice to retain oil within the vault.
4. The outflow system and restrictor device shall be designed according to the applicable requirements specified for **control structures** in Section 5.3.4 (p. 5-38).

DRAFT

Materials

Minimum 3,000 psi structural reinforced concrete must be used for all detention vaults. All construction joints must be provided with water stops.

Structural Stability

All vaults shall meet structural requirements for overburden support and H-20 traffic loading. Vaults located under roadways must meet the live load requirements of the *King County Road Standards*. Cast-in-place wall sections shall be designed as retaining walls. Structural designs for vaults must be stamped by a licensed structural engineer unless otherwise approved by DDES. Vaults shall be placed on stable, well-consolidated native material with suitable bedding. Vaults shall not be allowed in fill slopes, unless analyzed in a geotechnical report for stability and constructability.

Access Requirements

1. **Access** consisting of a frame, grate and locking cover shall be provided over the inlet pipe and outlet structure. Access openings shall be positioned a maximum of 50 feet from any location within the vault; additional access points may be required on large vaults. If more than one "v" is provided in the vault floor, access to each "v" must be provided.
2. For vaults with **greater than 1250 square feet of floor area**, a 5' by 10' removable, locking panel shall be provided. Alternatively, a separate access vault may be provided as shown in Figure 5.3.3.A (p. 5-37).
3. For **vaults under roadways**, the removable panel must be located outside the travel lanes. Alternatively, multiple standard locking manhole covers (see KCRS Drawing No. 2-022 and 2-023) may be provided. Spacing of manhole covers shall be 12 feet, measured on center, to facilitate removal of sediment. Ladders and hand-holds need only be provided at the outlet pipe and inlet pipe,

and as needed to meet OSHA confined space requirements. Vaults providing manhole access at 12-foot spacing need not provide corner ventilation pipes as specified in Item 10 below.

4. All **access openings**, except those covered by removable panels, shall have round, solid **locking covers** (see *KCRS* Drawing Nos. 2-022 and 2-023), or 3-foot square, locking diamond plate covers. For raised openings where the depth from the iron cover to the top of the vault exceeds 24 inches, an access structure equivalent to a Type 2 catch basin or Type 1 manhole shall be used (see KCRS Drawing Nos. 2-005 and 2-007). The opening in the vault lid need not exceed 24 inches in diameter.
5. Vaults with widths 10 feet or less must have **removable lids**.
6. The **maximum depth** from finished grade to the vault invert shall be 20 feet.
7. **Internal structural walls** of large vaults shall be provided with openings sufficient for maintenance access between cells. The openings shall be sized and situated to allow access to the maintenance "v" in the vault floor.
8. The **minimum internal height** shall be 7 feet from the highest point of the vault floor (not sump), and the **minimum width** shall be 4 feet.

   Exceptions:

   - Concrete vaults may be a minimum 3 feet in height and width **if used as tanks** with access manholes at each end, and if the width is no larger than the height.
   - The minimum internal height requirement may be waived for any areas covered by removable panels.
9. **Ventilation pipes** (minimum 12-inch diameter or equivalent) shall be provided in all four corners of vaults to allow for artificial ventilation prior to entry of maintenance personnel into the vault.

DRAFT

Access Roads

Access roads are required to the access panel (if applicable), the control structure, and at least one access point per cell, and they shall be designed and constructed **as specified for detention ponds** in Section 5.3.1 (p. 5-20).

Right-of-Way

Detention vaults to be maintained by King County but not located in King County right-of-way shall be in a tract dedicated to King County. Any tract not abutting public right-of-way will require a 15-foot wide extension of the tract to accommodate an access road to the vault.

Setbacks

Setbacks to tract/easement lines for vaults shall be 5 feet; adjacent building setback lines shall be 10 feet. For privately owned and maintained vaults, building foundations may serve as one or more of the vault walls.

5.3.3.2 METHODS OF ANALYSIS

Detention Volume and Outflow

The volume and outflow design for detention vaults shall be in accordance with the performance requirements in Chapter 1 and the hydrologic analysis and routing/design methods in Chapter 3. Restrictor and orifice design shall be according to Section 5.3.4 (p. 5-38).

FIGURE 5.3.3.A TYPICAL DETENTION VAULT

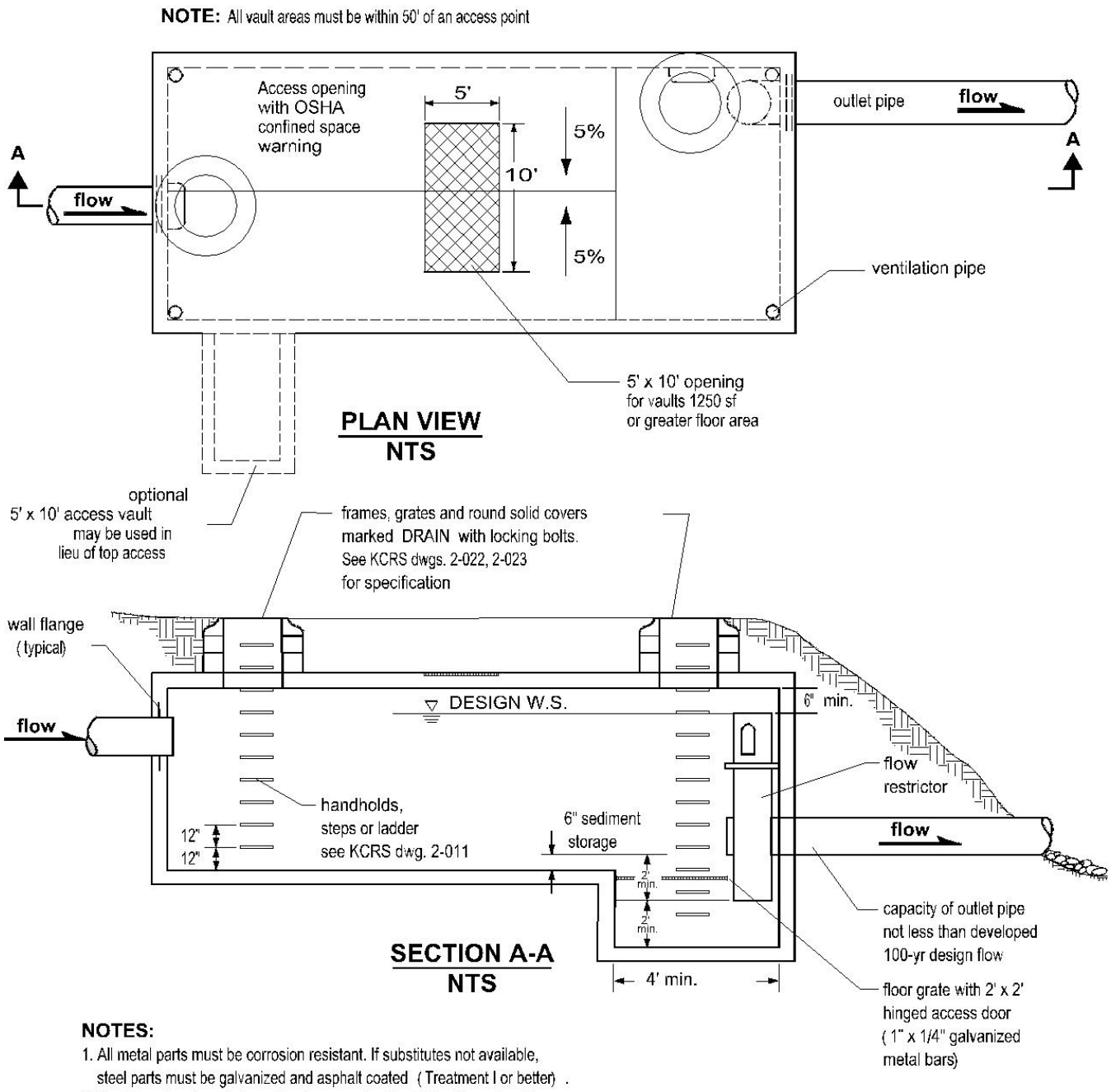

NOTES:

1. All metal parts must be corrosion resistant. If substitutes not available, steel parts must be galvanized and asphalt coated (Treatment I or better).
2. Provide water stop at all cast-in-place construction joints. Precast vaults shall have approved rubber gasket system.
3. Vaults < 10' wide must use removable lids.
4. Prefabricated vault sections may require structural modifications to support 5' x 10' opening over main vault. Alternatively, access can be provided via a side vestibule as shown.

5.3.4 CONTROL STRUCTURES

Control structures are catch basins or manholes with a restrictor device for controlling outflow from a facility to meet the desired performance. Riser type restrictor devices ("tees" or "FROP-Ts") also provide some incidental oil/water separation and fulfill the spill control requirements specified for pipe systems in Section 4.2 and as set forth in Core Requirement #4 (see Section 1.2.4).

The restrictor device is usually a multiple orifice design consisting of two or more orifices and/or a weir section sized to meet performance requirements.

Standard control structure details are shown in Figure 5.3.4.A (p. 5-40) through Figure 5.3.4.C (p. 5-42).

5.3.4.1 DESIGN CRITERIA

Multiple Orifice Restrictor

In most cases, control structures need only two orifices: one at the bottom and one near the top of the riser, although additional orifices may best utilize detention storage volume. Several orifices may be located at the same elevation if necessary to meet performance requirements.

1. **Minimum orifice diameter is 0.5 inches**. *Note: In some instances, a 0.5-inch bottom orifice will be too large to meet target release rates, even with minimal head. In these cases, the live storage depth need not be reduced to less than 3 feet to meet performance.*
2. Orifices shall be constructed on a **tee section** as shown in Figure 5.3.4.A (p. 5-40) or on a baffle as shown in Figure 5.3.4.B (p. 5-41).
3. In some cases, performance requirements may require the **top orifice/elbow** to be located too high on the riser to be physically constructed (e.g., a 13-inch diameter orifice positioned 0.5 feet from the top of the riser). In these cases, a notch weir in the riser pipe may be used to meet performance requirements (see Figure 5.3.4.E, p. 5-44).
4. Consideration shall be given to the backwater effect of water surface elevations in the downstream conveyance system. **High tailwater elevations** may affect performance of the restrictor system and reduce live storage volumes. *Note: The KCRTS program, version 4.0 and later, supports the design of a partially tailwatered control structure by using a headwater/tailwater (HW/TW) data file generated using the KCBW program. The user can specify the use of a HW/TW file within the "Point of Compliance Setup," located within the "Edit Facility" menu screen.*

DRAFT

Riser and Weir Restrictor

1. Properly designed **weirs may be used as flow restrictors** (see Figure 5.3.4.C and Figure 5.3.4.E through Figure 5.3.4.F). However, they must be designed to provide for primary overflow of the developed 100-year peak flow discharging to the detention facility.
2. The combined orifice and riser (or weir) overflow may be used to meet performance requirements; however, the design must still provide for primary overflow of the developed 100-year peak flow assuming all orifices are plugged. Figure 5.3.4.H (p. 5-48) may be used to calculate the head in feet above a riser of given diameter and flow.

Access Requirements

1. An **access road** to the control structure is required for inspection and maintenance, and shall be designed and constructed **as specified for detention ponds** in Section 5.3.1 (p. 5-20).
2. **Manhole and catch basin lids** for control structures shall be **locking**, and rim elevations shall match proposed finish grade.

DRAFT

FIGURE 5.3.4.A FLOW RESTRICTOR (TEE)

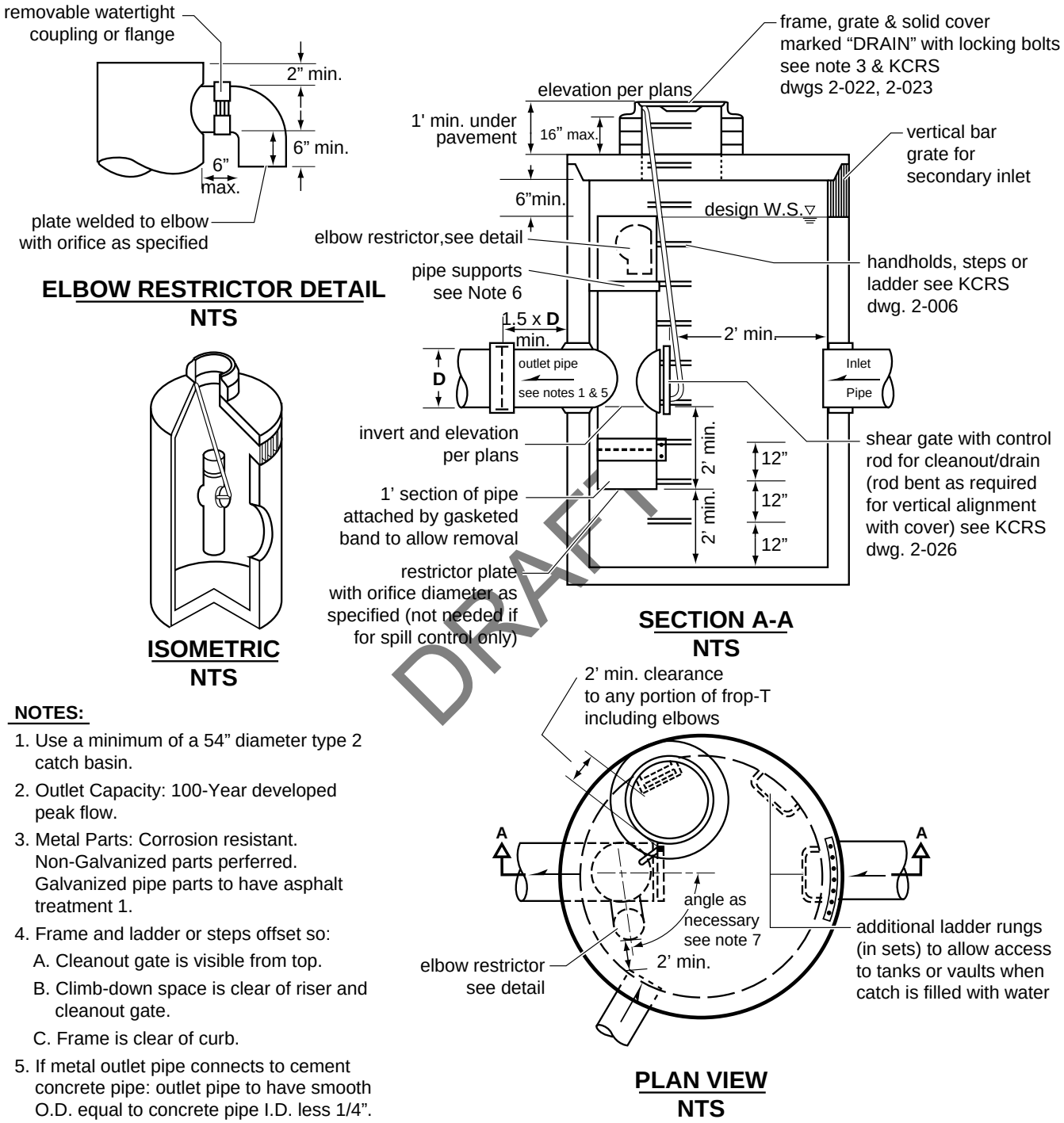

DRAFT

NOTES:

1. Use a minimum of a 54” diameter type 2 catch basin.
2. Outlet Capacity: 100-Year developed peak flow.
3. Metal Parts: Corrosion resistant. Non-Galvanized parts perferred. Galvanized pipe parts to have asphalt treatment 1.
4. Frame and ladder or steps offset so:
   A. Cleanout gate is visible from top.
   B. Climb-down space is clear of riser and cleanout gate.
   C. Frame is clear of curb.
5. If metal outlet pipe connects to cement concrete pipe: outlet pipe to have smooth O.D. equal to concrete pipe I.D. less 1/4”.
6. Provide at least one 3” X .090 gage support bracket anchored to concrete wall. (maximum 3’-0” vertical spacing)
7. Locate elbow restrictor(s) as necessary to provide minimum clearance as shown.
8. Locate additional ladder rungs in structures used as access to tanks or vaults to allow access when catch basin is filled with water.

FIGURE 5.3.4.B FLOW RESTRICTOR (BAFFLE)

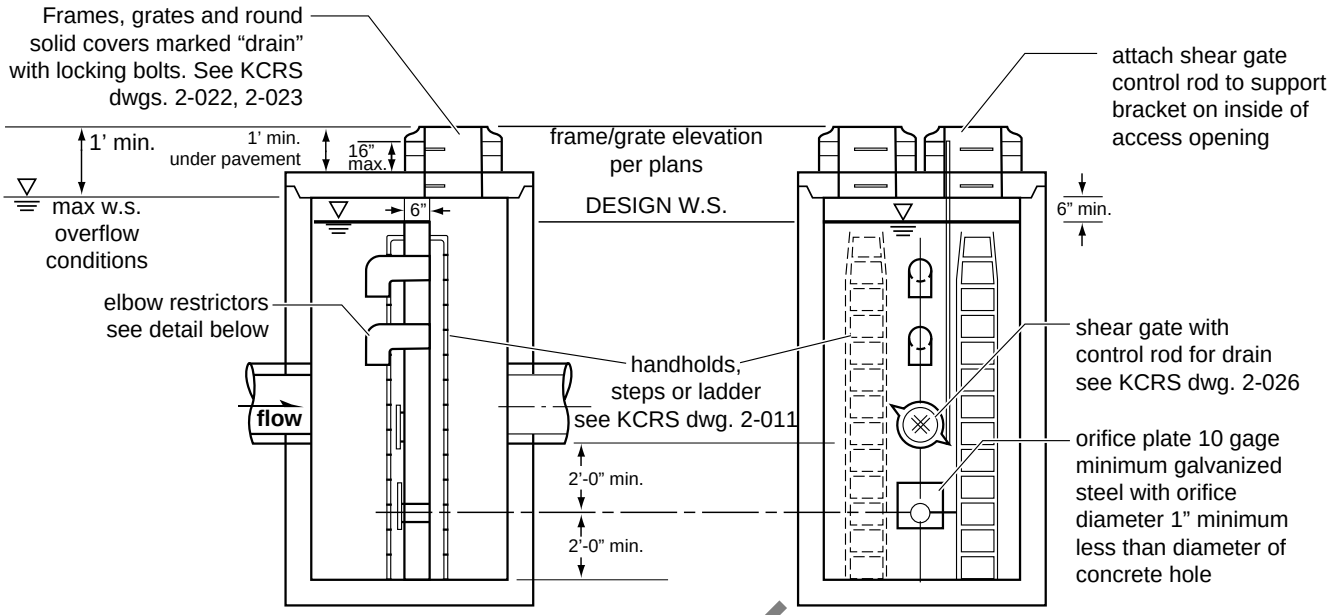

SECTION A-A
NTS

SECTION B-B
NTS

DRAFT

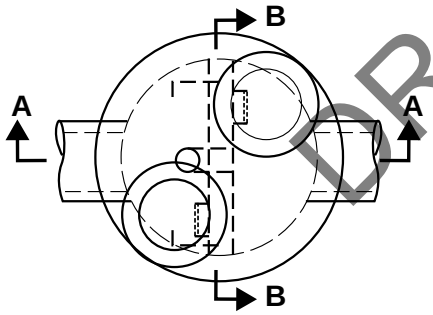

PLAN VIEW
NTS

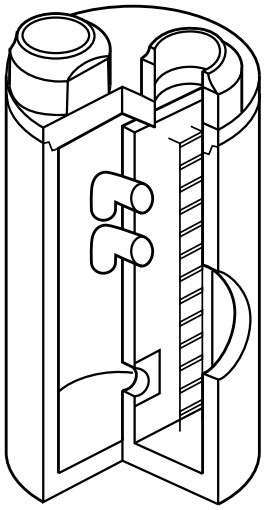

ISOMETRIC
NTS

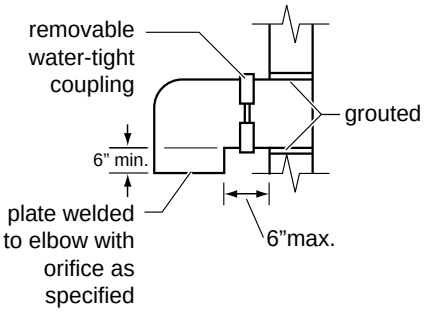

ELBOW RESTRICTOR DETAIL
NTS

NOTES:
outlet capacity: 100 year developed peak flow
metal parts: corrosion resistant steel parts galvanized and asphalt coated
catch basin: type 2 minimum 72" diameter to be constructed in accordance with KCRS dwg. 2-005 and AASHTO M-199 unless otherwise specified
orifices: sized and located as required with lowest orifice a minimum of 2' from base

FIGURE 5.3.4.C FLOW RESTRICTOR (WEIR)

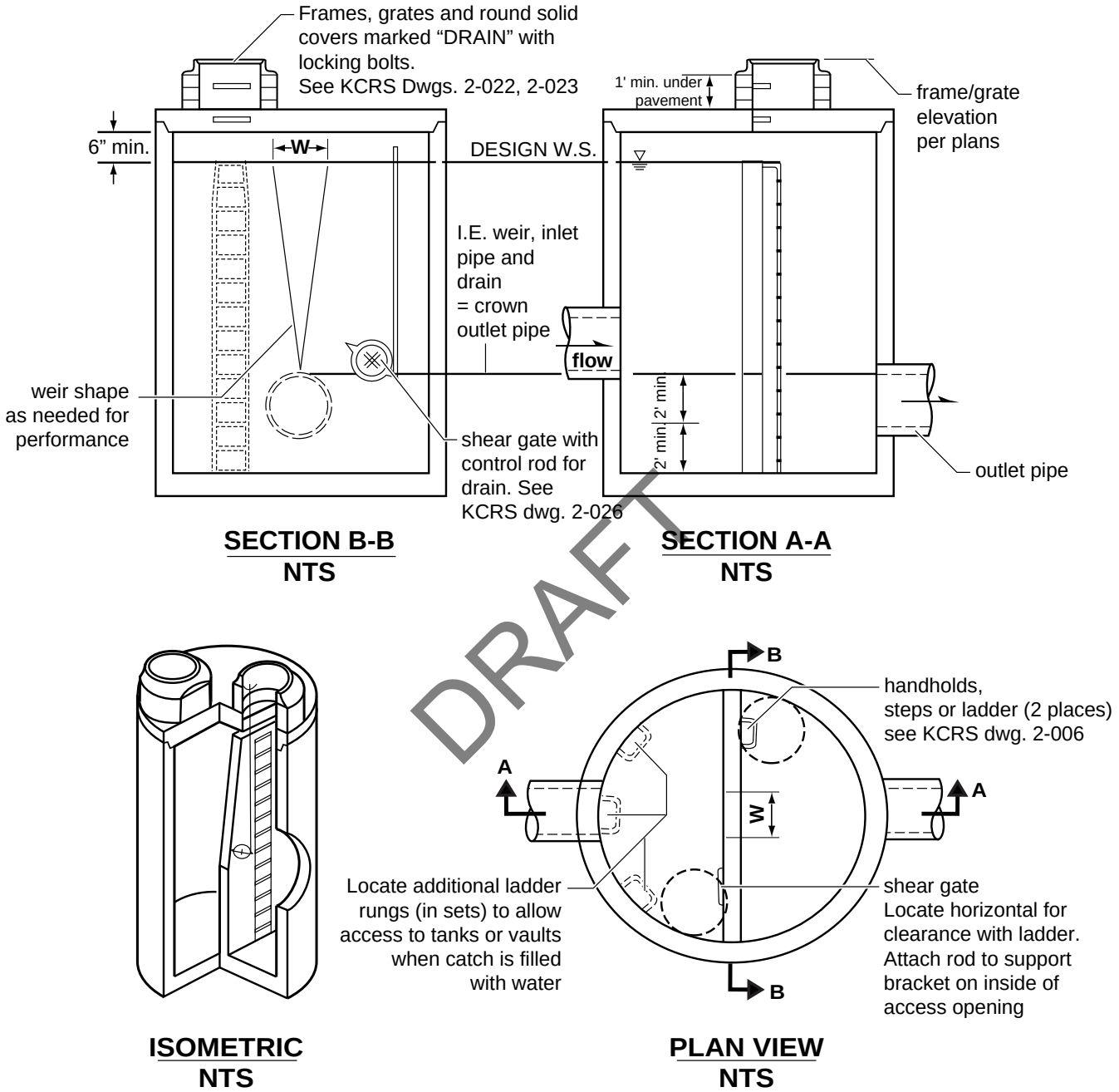

NOTES:
Outlet Capacity: 100-year developed peak flow.
Metal Parts: corrosion resistant steel parts galvanized and asphalt coated.
Catch Basin: type 2 Min. 72" diameter to be constructed in accordance with KCRS dwg 2-005 and AASHTO M-199 unless otherwise specified.
Baffle Wall: to be designed with concrete reinforcing as required.
Spill Control Requirements: see Section 4.2.

5.3.4.2 METHODS OF ANALYSIS

This section presents the methods and equations for design of **control structure restrictor devices**. Included are details for the design of orifices, rectangular sharp-crested weirs, v-notch weirs, sutro weirs, and overflow risers.

Orifices

Flow through orifice plates in the standard tee section or turn-down elbow may be approximated by the general equation:

$$Q = CA\sqrt{2gh} \tag{5-4}$$

where
- Q = flow (cfs)
- C = coefficient of discharge (0.62 for plate orifice)
- A = area of orifice (sf)
- h = hydraulic head (ft)
- g = gravity (32.2 ft/sec^2)

Figure 5.3.4.D illustrates a simplified application of the orifice equation, assuming a water surface at the top of the riser and that the 2-year water surface represents the head in the outlet pipe.

FIGURE 5.3.4.D SIMPLE ORIFICE

DRAFT

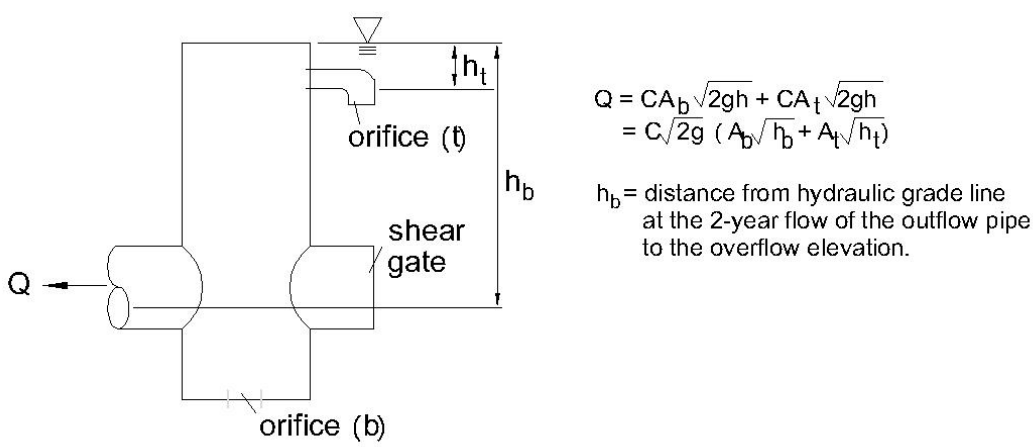

The diameter of the orifice is calculated from the flow. The orifice equation is often useful when expressed as the orifice diameter in inches:

$$d = \sqrt{\frac{36.88Q}{\sqrt{h}}} \tag{5-5}$$

where
- d = orifice diameter (inches)
- Q = flow (cfs)
- h = hydraulic head (ft)

Rectangular, Sharp-Crested Weir

The rectangular, sharp-crested weir design shown in Figure 5.3.4.E may be analyzed using standard weir equations for the fully contracted condition.

FIGURE 5.3.4.E RECTANGULAR, SHARP-CRESTED WEIR

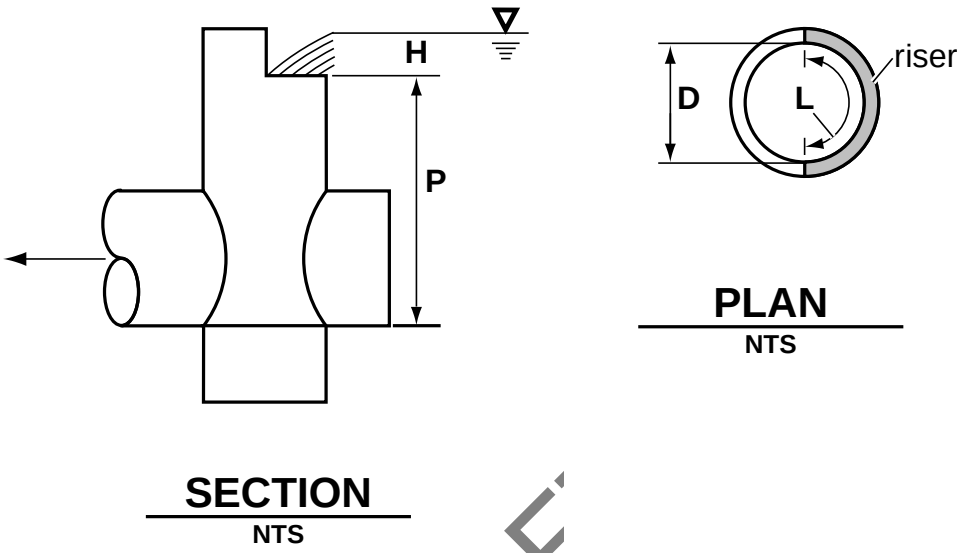

DRAF

$$Q = C\,(L - 0.2H)H^{3/2} \qquad (5\text{-}6)$$

where Q = flow (cfs)
C = 3.27 + 0.40 H/P (ft)
H,P are as shown above
L = length (ft) of the portion of the riser circumference as necessary not to exceed 50% of the circumference
D = inside riser diameter (ft)

Note that this equation accounts for side contractions by subtracting 0.1H from L for each side of the notch weir.

V-Notch, Sharp-Crested Weir

V-notch weirs, as shown in Figure 5.3.4.F, may be analyzed using standard equations for the fully contracted condition.

FIGURE 5.3.4.F V-NOTCH, SHARP-CRESTED WEIR

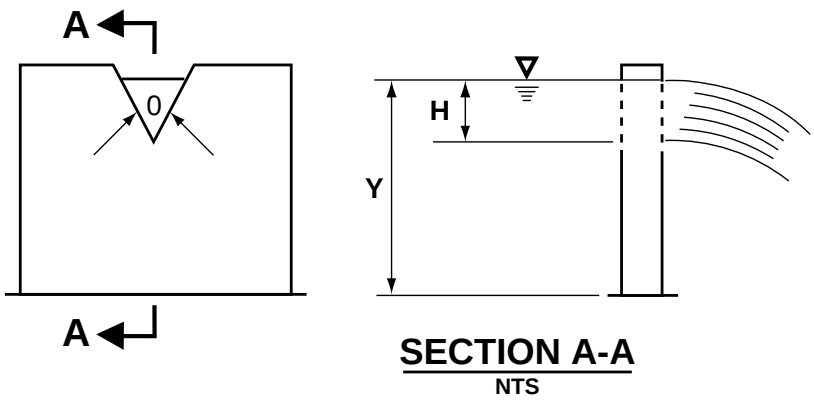

$$Q = C_d\,(\tan\theta/2)Y^{5/2}, \text{ in cfs}$$

Where values of C_d may be taken from the following chart:

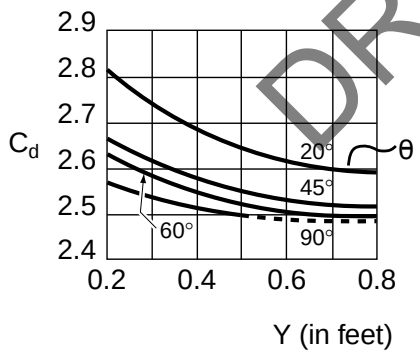

DRAFT

Proportional or Sutro Weir

Sutro weirs are designed so that the discharge is proportional to the total head. This design may be useful in some cases to meet performance requirements.

The sutro weir consists of a rectangular section joined to a curved portion that provides proportionality for all heads above the line A-B (see Figure 5.3.4.G). The weir may be symmetrical or non-symmetrical.

FIGURE 5.3.4.G SUTRO WEIR

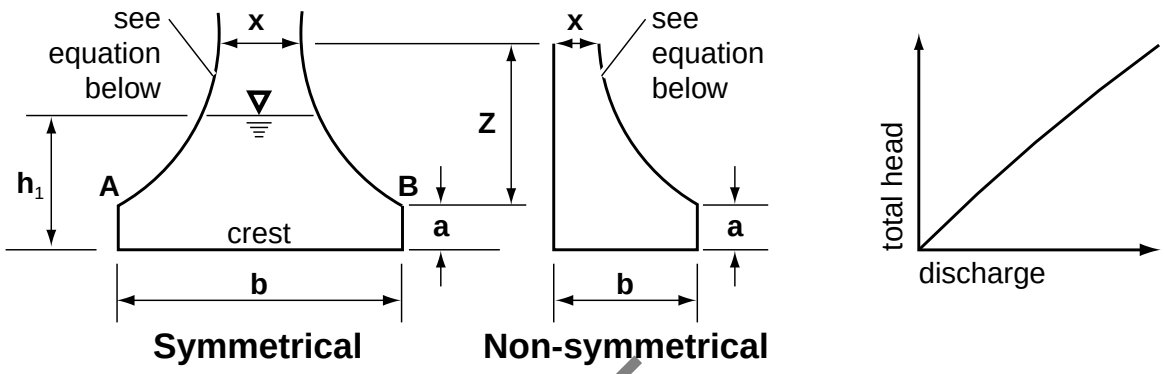

DRAFT

For this type of weir, the curved portion is defined by the following equation (calculated in radians):

$$\frac{x}{b} = 1 - \frac{2}{\pi} \operatorname{Tan}^{-1} \sqrt{\frac{Z}{a}} \qquad (5\text{-}7)$$

where *a*, *b*, *x* and *Z* are as shown in Figure 5.3.4.G. The head-discharge relationship is:

$$Q = C_d\, b\, Q = C_d\, b \sqrt{2ag} \left(h_1 - \frac{a}{3} \right) \qquad (5\text{-}8)$$

Values of C_d for both symmetrical and non-symmetrical sutro weirs are summarized in Table 5.3.4.A (p. 5-47).

Note: When b > 1.50 or a > 0.30, use C_d = 0.6.

TABLE 5.3.4.A VALUES OF C_d FOR SUTRO WEIRS

C_d Values, Symmetrical

a (ft)	*b* (ft)				
	0.50	0.75	1.0	1.25	1.50
0.02	0.608	0.613	0.617	0.6185	0.619
0.05	0.606	0.611	0.615	0.617	0.6175
0.10	0.603	0.608	0.612	0.6135	0.614
0.15	0.601	0.6055	0.610	0.6115	0.612
0.20	0.599	0.604	0.608	0.6095	0.610
0.25	0.598	0.6025	0.6065	0.608	0.6085
0.30	0.597	0.602	0.606	0.6075	0.608

C_d Values, Non-Symmetrical

a (ft)	*b* (ft)				
	0.50	0.75	1.0	1.25	1.50
0.02	0.614	0.619	0.623	0.6245	0.625
0.05	0.612	0.617	0.621	0.623	0.6235
0.10	0.609	0.614	0.618	0.6195	0.620
0.15	0.607	0.6115	0.616	0.6175	0.618
0.20	0.605	0.610	0.614	0.6155	0.616
0.25	0.604	0.6085	0.6125	0.614	0.6145
0.30	0.603	0.608	0.612	0.6135	0.614

DRAFT

Riser Overflow

The nomograph in Figure 5.3.4.H may be used to determine the head (in feet) above a riser of given diameter and for a given flow (usually the 100-year peak flow for developed conditions).

FIGURE 5.3.4.H RISER INFLOW CURVES

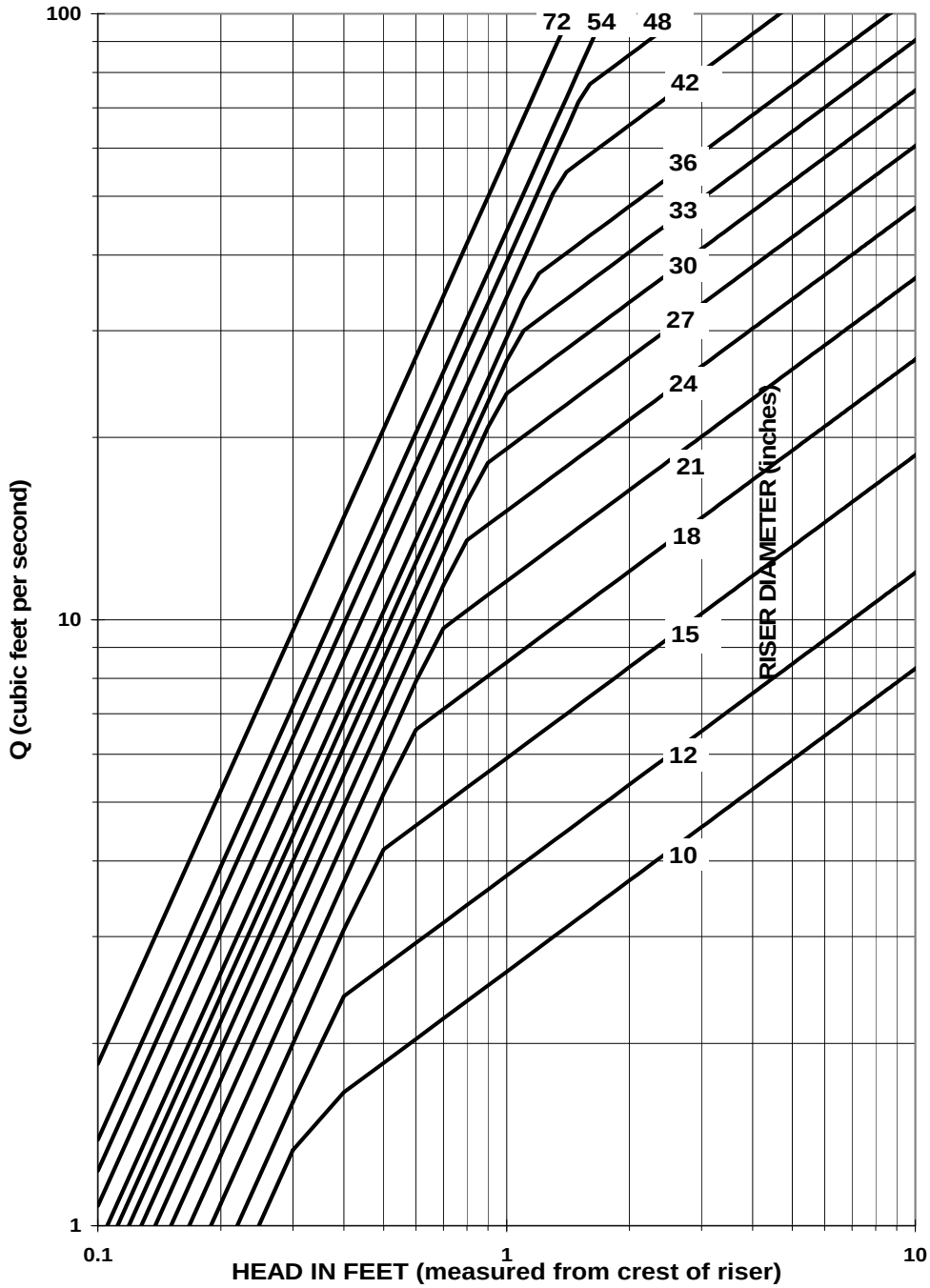

$Q_{weir}=9.739\ DH^{3/2}$

$Q_{orifice}=3.782\ D^2H^{1/2}$

Q in cfs, D and H in feet

Slope change occurs at weir-orifice transition

5.3.5 PARKING LOT DETENTION

Private parking lots may be used to provide additional detention volume for runoff events greater than the 2-year runoff event provided all of the following conditions are met:

1. The depth of water detained does not exceed 1 foot at any location in the parking lot for runoff events up to and including the 100-year event.
2. The gradient of the parking lot area subject to ponding is 1 percent or greater.
3. The emergency overflow path is identified and noted on the engineering plan, and the path complies with Core Requirements #1 and #2 (see Sections 1.2.1 and 1.2.2).
4. Fire lanes used for emergency equipment are free of ponding water for all runoff events up to and including the 100-year event.

Note: Flows may be backed up into parking lots by the control structure (i.e., the parking lot need not function as a flow-through detention pond).

5.3.6 ROOF DETENTION

Detention ponding on roofs of structures may be used to meet flow control requirements provided all of the following conditions are met:

1. The roof support structure is analyzed by a structural engineer to address the weight of ponded water.
2. The roof area subject to ponding is sufficiently waterproofed to achieve a minimum service life of 30 years.
3. The minimum pitch of the roof area subject to ponding is $^{1}/_{4}$-inch per foot.
4. An overflow system is included in the design to safely convey the 100-year peak flow from the roof.
5. A mechanism is included in the design to allow the ponding area to be drained for maintenance purposes or in the event the restrictor device is plugged.

DRAFT

5.3.7 SIMPLE DETENTION POND FOR CLEARED AREAS

This simplified alternative to the standard detention pond (Section 5.3.1) may be used to satisfy the flow control facility requirement only for a conversion of forest to pasture or grass, provided that **all of the following conditions are met**:

1. The **total area draining to any one pond** must be no larger than 3 acres and must consist primarily of vegetated land (e.g., forest, meadow, pasture, grass, garden, crops, etc.) free of impervious surface. If more than 3 acres of cleared area (i.e., area converted from forest to pasture/grass) is proposed to be served, multiple simple detention ponds must be used.
2. The area served by the pond must not be located within a **Flood Problem Flow Control Area** as determined in Section 1.2.3.1.
3. The pond must not drain to a ***severe erosion problem*** or a ***severe flooding problem*** as defined in Section 1.2.2, Core Requirement #2.
4. The pond must be constructed in accordance with the **design criteria** and **methods of analysis** specified in this section.

5.3.7.1 DESIGN CRITERIA

Typical details of the simple detention pond are shown in Figure 5.3.7.A (p. 5-52) and Figure 5.3.7.B (p. 5-53).

DRAFT

General

1. The **dispersal trench** at the outlet from the storage pond may not be placed closer than 50 feet from the top of slopes, 20% or greater.
2. The pond, berm, and dispersal trench must be **fenced** to prevent livestock disturbance.
3. **Runoff discharge toward *landslide hazard areas*** must be evaluated by a geotechnical engineer or a qualified geologist. The discharge point may not be placed on or above slopes greater than 20% or above ***erosion hazard areas*** without evaluation by a geotechnical engineer or qualified geologist and DDES approval.

Berming and Excavation

1. To the extent feasible, the pond shall be excavated into the ground with **minimal berming** on the downslope (outlet) end of the pond. An excavated pond is easier to construct and maintain and is less likely to cause problems during severe storm events.
2. Where berms are used, the **top of berm** shall be a minimum of 3 feet wide. The soil shall be **well compacted** and planted with an erosion-control seed mix as soon as possible.
3. Whether created by excavation or berming, all pond **side-slopes shall be gently sloped**, no steeper than 3 feet horizontal per 1 foot of vertical drop.
4. Prior to constructing the berm, the **underlying ground** shall be scrapped clean of organic material.
5. At a minimum, a **hand-level** shall be used to ensure the berm and outlet structure are constructed at the correct relative elevations.
6. The bottom 6 inches of the pond shall retain standing water in the pond between storms to create a **permanent pool**. The volume of the permanent pool is not counted towards the required detention volume, which is above the permanent pool.
7. The **water depth of required detention volume** above the permanent pool should average about 18 inches and must be no deeper than 24 inches.

Simple Outlet Control Structure

1. **Materials Required:**
   a) PVC pipe, 4 inch diameter or greater as needed.
   b) PVC pipe cap.
   c) Small plastic or concrete catch basin with grate, minimum 12-inch width.
2. **Construction Method:**
   a) Drill or cut a hole just below the rim of the catch basin, sized to connect the PVC pipe.
   b) Install the catch basin into the bottom of the pond. The catch basin should be located within a few feet of the berm at the downslope end of the pond. The top of catch basin must be a minimum of 6 inches above the bottom of the pond to create the permanent pool. Align the hole in the downslope direction of discharge.
   c) Dig a trench for the pipe from the catch basin to the location of the flow spreader.
   d) Connect the PVC pipe to the catch basin. PVC pipe should extend about 4 inches into the basin.
   e) Drill the appropriate size hole into the PVC cap. Clean hole to remove burrs, without increasing the size of the opening.
   f) Connect the drilled cap to the end of the PVC pipe extending into the catch basin.
   g) Extend the PVC pipe to the location of the flow spreader. The pipe shall be laid with a slight slope towards the flow spreader. A slope of ¼ inch per foot of pipe is recommended and should not exceed 2 inches per foot.
   h) Backfill the trench over the PVC pipe and compact well. Avoid placing large and/or sharp rocks in the trench to minimize potential for damaging the pipe during compaction.

DRAFT

FIGURE 5.3.7.A SIMPLE DETENTION POND - PLAN VIEW

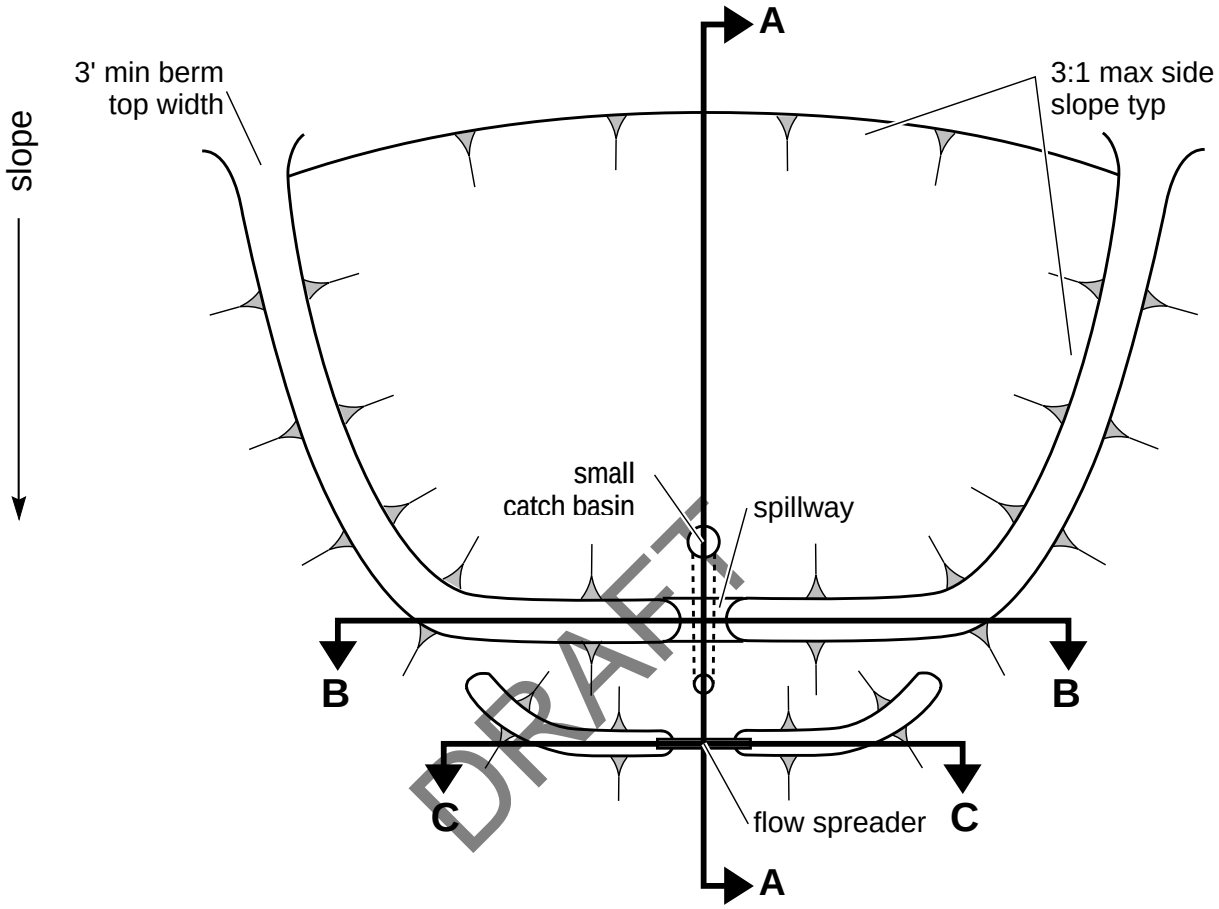

PLAN VIEW
NTS

FIGURE 5.3.7.B SIMPLE DETENTION POND – SECTION VIEWS

catch basin grate

small
catch basin

DRAFT

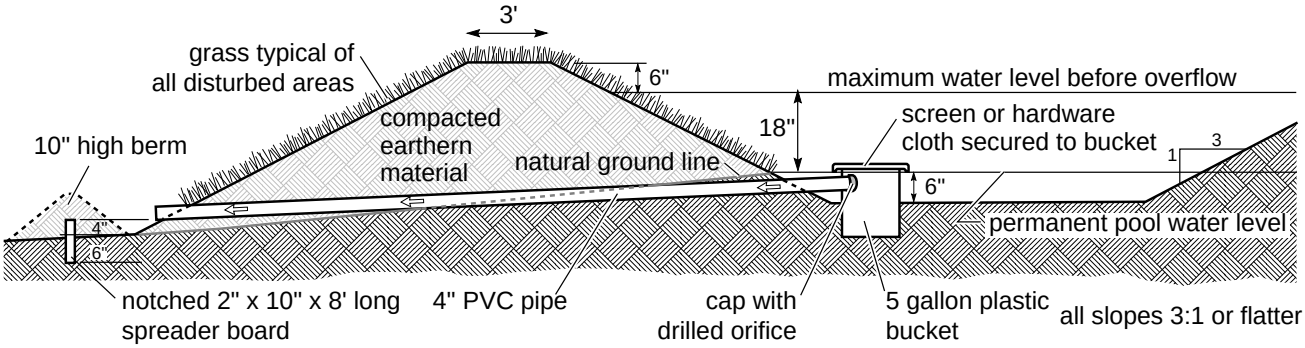

SECTION A-A
NTS

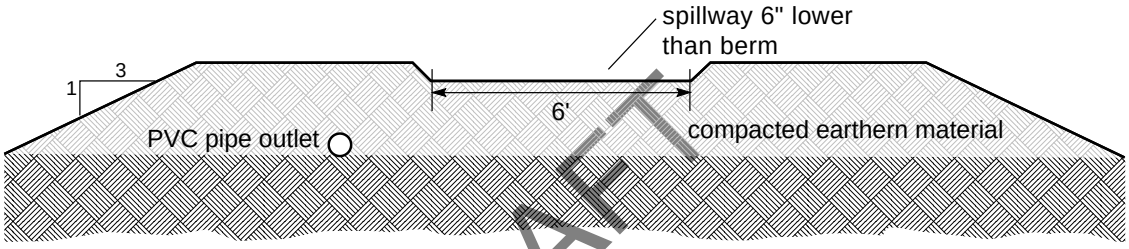

DRAFT

SECTION B-B
NTS

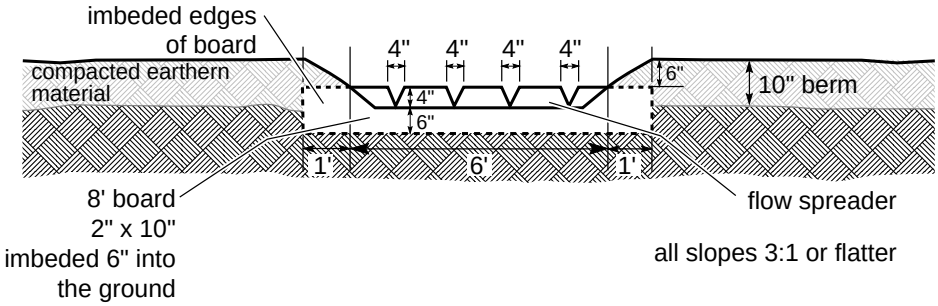

SECTION C-C
NTS

5.3.7.2 METHODS OF ANALYSIS

The detention volume and orifice sizing for the **simple detention pond** shall be determined as described in this section. This determination is based on where the pond is located within the County and how much cleared area (i.e., area of forest converted to pasture or grass) is served by the pond.

Detention Volume

The map in Figure 5.3.7.C (p. 5-56) provides the minimum pond volume required based on 10,000 square feet of cleared area. To determine the total pond volume required, locate the ***project site*** on the map and multiply the number from the map by the amount of cleared area that will be served by the pond (if the cleared area is measured in units of square feet, remember to divide the actual area by 10,000 before multiplying with map value). If the ***project site*** is located between the lines shown on the map, select the closest line to the ***project site***. If located midway between two lines, the average value may be used.

To determine if the constructed pond has adequate storage, the pond area must be determined by field measurements. If all side slopes are at 3H:1V or flatter, the pond's bottom area may be used to determine the pond volume, V_t, above the permanent pool using the following equation. The resulting volume, V_t, must be equal to or greater than the required volume determined from Figure 5.3.7.C.

$$V_t = 1.5\,A_b + 3.4\,P \qquad (5\text{-}9)$$

where V_t = total pond volume available (cu ft)
A_b = bottom area of pond (sq ft)
P = bottom perimeter of pond (ft)

DRAFT

A more accurate volume determination can be made with field measurements and area calculations taken at two elevations. The first elevation at which the pond area is measured is at the top of the permanent pool. The second area measurement is taken at the overflow spillway elevation.

$$V_t = d\,\frac{(A_w + A_b)}{2} \qquad (5\text{-}10)$$

where V_t = total pond volume available (cu ft)
A_w = area of pond (sq ft) measured at the lowest elevation of the overflow spillway (A_b)
A_b = area of pond (sq ft) measured at the top of the permanent pool
d = depth of reservoir (ft) = 1.5 feet

Orifice Sizing

Figure 5.3.7.D provides the orifice diameter to be drilled into the PVC cap. If the orifice diameter matches the PVC pipe diameter, no cap is required. Otherwise, the PVC pipe diameter must be greater than the required orifice diameter. If the ***project site*** is located between the lines shown on the map, either select the closest line to the ***project site*** or interpolate between the two values.

FIGURE 5.3.7.C SIMPLE DETENTION POND - MINIMUM VOLUME

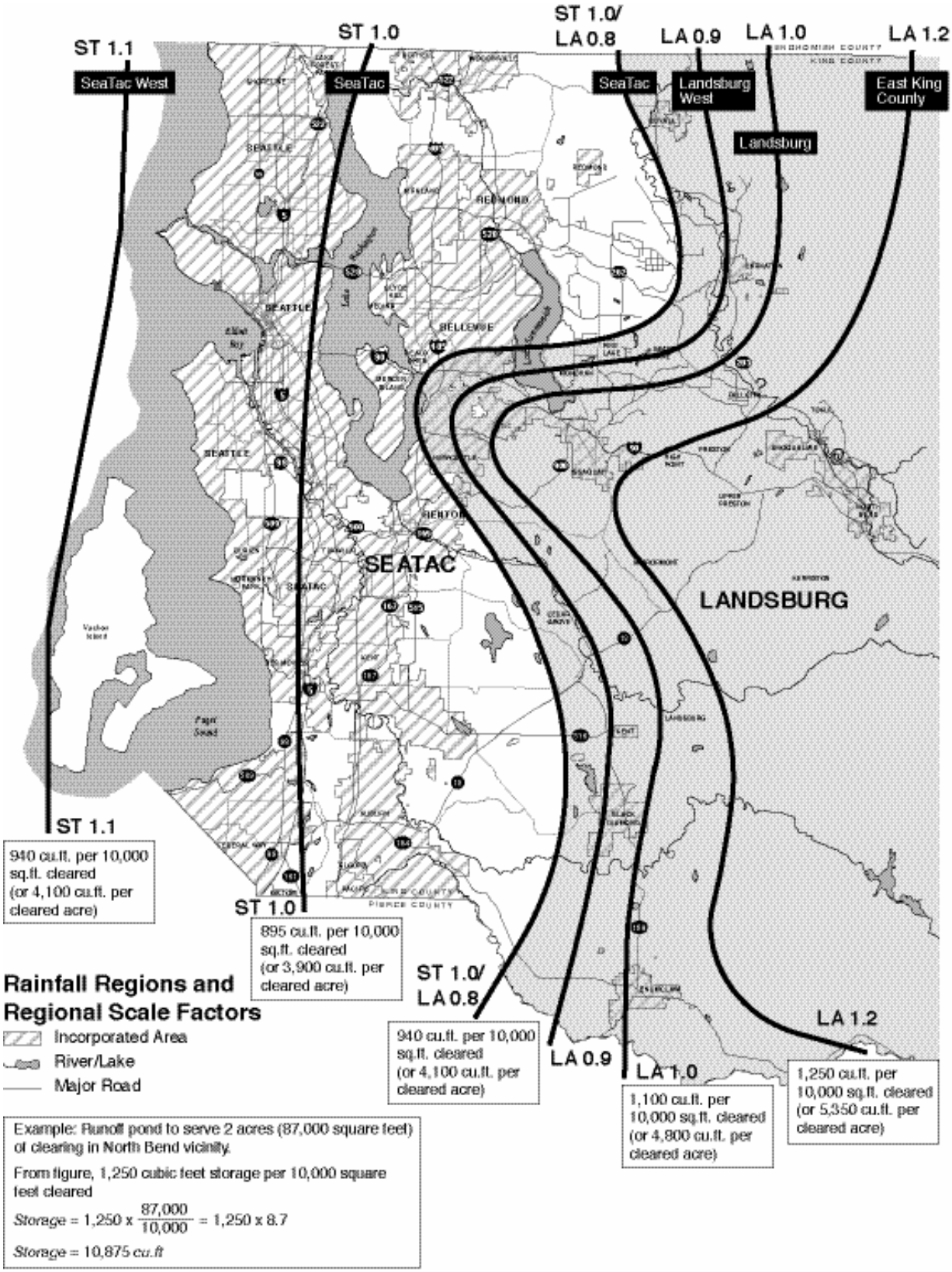

Example: Runoff pond to serve 2 acres (87,000 square feet) of clearing in North Bend vicinity.

From figure, 1,250 cubic feet storage per 10,000 square feet cleared

$$Storage = 1{,}250 \times \frac{87{,}000}{10{,}000} = 1{,}250 \times 8.7$$

Storage = 10,875 cu.ft

FIGURE 5.3.7.D SIMPLE DETENTION POND - ORIFICE SIZE

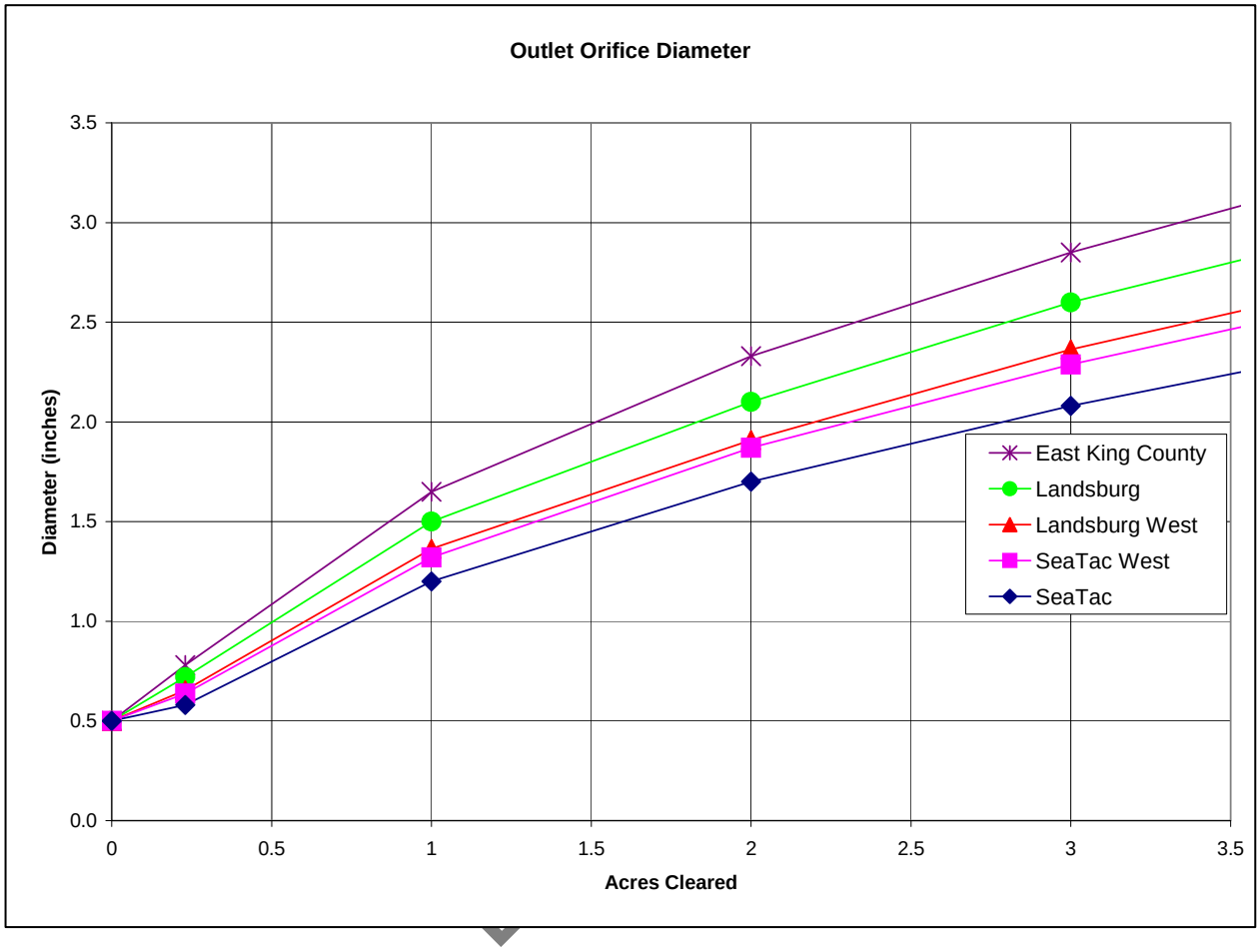

DRAFT

5.4 INFILTRATION FACILITIES

This section presents the methods, criteria, and details for design and analysis of infiltration facilities. These facilities are used where soils are suitable for soaking the increased runoff from development into the ground. Such facilities usually have a detention volume component to allow for temporary storage of runoff while it is being infiltrated. This detention volume is typically dependent on the infiltration capacity of the soils and the required facility performance.

There are five types of infiltration facilities allowed for use in complying with Core Requirement #3, "Flow Control": infiltration ponds, infiltration tanks, infiltration vaults, infiltration trenches, and small infiltration basins. In general, ponds are preferred because of the ease of maintenance and the water quality treatment that surface soil and vegetation provide. Tanks and trenches are useful where site constraints prevent use of a pond, and small infiltration basins are simple to design but have limited uses.

The information presented in this section is organized as follows:

Section 5.4.1, "General Requirements for Infiltration Facilities"

Section 5.4.2, "Infiltration Ponds"
"Design Criteria," Section 5.4.2.1 (p. 5-67)
"Methods of Analysis," Section 5.4.2.2 (p. 5-68)

Section 5.4.3, "Infiltration Tanks"
"Design Criteria," Section 5.4.3.1 (p. 5-70)
"Methods of Analysis," Section 5.4.3.2 (p. 5-71)

Section 5.4.4, "Infiltration Vaults"
"Design Criteria," Section 5.4.4.1 (p. 5-73)
"Methods of Analysis," Section 5.4.4.2 (p. 5-74)

Section 5.4.5, "Infiltration Trenches"
"Design Criteria," Section 5.4.5.1 (p. 5-75)
"Methods of Analysis," Section 5.4.5.2 (p. 5-75)

Section 5.4.6, "Small Infiltration Basins"
"Design Criteria," Section 5.4.6.1 (p. 5-77).

DRAFT

5.4.1 GENERAL REQUIREMENTS FOR INFILTRATION FACILITIES

This section presents the design requirements generally applicable to all infiltration facilities. Included are the general requirements for determining acceptable soil conditions, determining infiltration rates, and providing overflow protection, spill control, presettling, groundwater protection, protection from upstream erosion, and construction.

❑ SOILS

The applicant must demonstrate through infiltration testing, soil logs, and the written opinion of a geotechnical engineer that sufficient permeable soil exists at the proposed facility location to allow construction of a properly functioning infiltration facility.

The basic requirement is a minimum of 3 feet of permeable soil below the bottom of the facility (bottom of pond or excavation for tank) and at least 3 feet between the bottom of the facility and the maximum wet-season water table. Test pits or borings shall extend at least 5 feet below the bottom of the infiltration

facility, and at least one test hole should reach the water table. If the water table is very deep, the test hole need not extend more than one-fourth the maximum width of the pond below the bottom of a pond, or more than 5 feet below the bottom of a tank. If there is any question about the actual wet-season water table elevation, measurements shall be made during the period when the water level is expected to be at a maximum.

Any requirements associated with impacts to an ***erosion hazard area***, ***steep slope hazard area***, or ***landslide hazard area*** should also be addressed in the soil study.

The geotechnical engineer shall provide a report stating whether the location is suitable for the proposed infiltration facility, and shall recommend a design infiltration rate (see "Design Infiltration Rate" below).

❑ MEASURED INFILTRATION RATES

Infiltration rate tests are used to help estimate the maximum sub-surface vertical infiltration rate of the soil below a proposed infiltration facility (e.g., pond or tank) or a closed depression. The tests are intended to simulate the physical process that will occur when the facility is in operation; therefore, a saturation period is required to approximate the soil moisture conditions that may exist prior to the onset of a major winter runoff event.

Testing Procedure

1. Excavations shall be made to the bottom elevation of the proposed infiltration facility. The measured infiltration rate of the underlying soil shall be determined using either the **EPA falling head percolation test procedure** (*Onsite Wastewater Treatment and Disposal Systems*, EPA, 1980; see Reference Section 6-A), the **double ring infiltrometer test** (ASTM D3385), a single ring at least 3 feet in diameter, or large scale Pilot Infiltration Test (PIT) as described in the August 2001 Stormwater Management Manual for Western Washington. Large single ring and PIT tests have been shown to more closely match actual full-scale facility performance than smaller test methods.
2. The test hole or apparatus shall be filled with water and maintained at depths above the test elevation for the **saturation periods** specified for the appropriate test.
3. Following the saturation period, the rate shall be determined in accordance with the specified test procedures, with a **head** of 6 inches of water.
4. The design engineer shall perform sufficient tests to determine a representative infiltration rate. At a minimum, three small-scale **tests** shall be performed for each proposed infiltration facility location, and at least 2 tests per acre (minimum of 4 tests) shall be performed for a closed depression. If large-scale tests are performed, the number of tests may be reduced at the discretion of the review engineer.
5. A minimum of two **soils logs** shall be obtained for each tank and for each 10,000 square feet (plan view area) of proposed pond infiltration surface area. Soils shall be logged for a minimum of 5 feet below the bottom of each proposed infiltration facility. The logs shall describe the SCS series of the soil, indicate the textural class of the soil horizons throughout the depth of the log, note any evidence of high groundwater level (such as mottling), and estimate the maximum groundwater elevation, if within the limits of the log.

DRAFT

❑ DESIGN INFILTRATION RATE

In the past, many infiltration facilities have been built that have not performed as the designer intended. This has resulted in flooding and substantial public expenditures to correct problems. Monitoring of actual facility performance has shown that the full-scale infiltration rate is far lower than the rate determined by small-scale testing. Actual measured facility rates of 10% of the small-scale test rate have been seen. It is clear that great conservatism in the selection of design rates is needed, particularly where conditions are less than ideal. The design infiltration rate shall be determined using an analytical groundwater model to investigate the effects of the local hydrologic conditions on facility performance. Since this analysis may be excessively costly for small projects such as short plats or commercial projects

of less than 1 acre, the groundwater modeling requirement may be replaced with use of the simplified analysis method described below along with full-scale testing of the completed facility to verify performance.

Groundwater modeling (mounding analysis) of the proposed infiltration facility shall be done using the design infiltration rate and the estimated maximum groundwater elevation determined for the proposed facility location. MODRET or an equivalent model must be used unless DDES approves an alternative analytic technique. Developed condition hydrographs should be exported from the KCRTS model of the ***project site*** for the groundwater mounding analysis. Test hydrographs should include at a minimum the full year 8 synthetic record and at least one other runoff event that is the highest volume, peak-flow event identified through KCRTS analysis of the infiltration facility. Note that an iterative process may be required beginning with an estimated design rate, KCRTS sizing, then groundwater model testing.

Simplified Method

A simplified method may be used for determining the preliminary design infiltration rate by applying correction factors to the measured infiltration rate. The correction factors account for uncertainties in testing, depth to the water table or impervious strata, infiltration receptor geometry, and long-term reductions in permeability due to biological activity and accumulation of fines. Equation 5-9 has been developed to account for these factors. This equation estimates the **maximum** design infiltration rate (I_{design}); additional reduction in rate beyond that produced by the equation may be appropriate. Note that the design infiltration rate I_{design} **must not exceed 20 inches/hour.**

$$I_{design} = I_{measured} \times F_{testing} \times F_{geometry} \times F_{plugging} \qquad (5\text{-}11)$$

Correction factor $F_{testing}$ accounts for uncertainties in the testing methods. For the EPA method, $F_{testing}$ = 0.30; for the ASTM D3385 method or large-scale testing, $F_{testing}$ = 0.50

$F_{geometry}$ accounts for the influence of facility geometry and depth to the water table or impervious strata on the actual infiltration rate. A shallow water table or impervious layer will reduce the effective infiltration rate of a large pond, but this will not be reflected in a small scale test. Clearly, a large pond built over a thin pervious stratum with a shallow water table will not function as well as the same pond built over a thick pervious stratum with a deep water table. $F_{geometry}$ must be between 0.25 and 1.0 as determined by the following equation:

$$F_{geometry} = 4\,D/W + 0.05 \qquad (5\text{-}12)$$

where D = depth from the bottom of the proposed facility to the maximum wet-season water table or nearest impervious layer, whichever is less
W = width of the facility

$F_{plugging}$ accounts for reductions in infiltration rates over the long term due to plugging of soils. This factor is:

- 0.7 for loams and sandy loams
- 0.8 for fine sands and loamy sands
- 0.9 for medium sands
- 1.0 for coarse sands or cobbles, or any soil type in an infiltration facility preceded by a water quality facility.

DRAFT

❑ PERFORMANCE TESTING

Where the design is based on the Simplified Method, before acceptance of the facility by King County, the completed facility must be tested and monitored to demonstrate that the facility performs as designed. If the facility performance is not satisfactory, the facility will need to be modified or expanded as needed in order to make it function as designed. Where a groundwater mounding analysis was used in the design, small-scale infiltration testing in the bottom of the facility to demonstrate that the soils in the constructed facility are representative of the design assumptions is required.

❑ 100-YEAR OVERFLOW CONVEYANCE

An overflow route shall be identified for stormwater flows that overtop the facility when infiltration capacity is exceeded or the facility becomes plugged and fails. The overflow route must be able to safely convey the 100-year developed peak flow to the downstream conveyance system or other acceptable discharge point in accordance with conveyance requirements in Section 1.2.4.

Where the entire ***project site*** is located within a closed depression (such as some gravel pits), the requirement to identify and analyze a 100-year overflow pathway may be waived by DDES if (1) an additional correction factor of 0.5 is used in calculating the **design infiltration rate**, (2) the facility is sized to fully infiltrate the 100-year runoff event, and (3) the facility is not bermed on any side. **Intent:** to address situations where the infiltration facility may be a highly permeable onsite closed depression, such as a gravel pit, where all stormwater is currently, and will remain, fully infiltrated.

❑ SPILL CONTROL DEVICE

All infiltration facilities must have a spill control device upstream of the facility to capture oil or other floatable contaminants before they enter the infiltration facility (see Section 4.2.1.1). If a tee section is used, the top of the riser should be set above the 100-year overflow elevation to prevent oils from entering the infiltration facility.

DRAFT

❑ PRESETTLING

Presettling must be provided before stormwater enters the infiltration facility. This requirement may be met by either of the following:

- A water quality facility from the Basic WQ menu (this alternative is recommended; see Section 6.1.1 for facility options).
- A presettling pond or vault with a treatment volume equal to 0.75 times the runoff from the mean annual storm V_r (see Section 6.4.1.1 for information on computing V_r.).

If water in the WQ facility or presettling facility will be in direct contact with the soil, the facility must be lined according to the liner requirements in Section 6.2.4. If the presettling facility is a vault, design of the vault shall be the same as required for presettling cells in sand filter vaults (see Section 6.5.3.2).

The settling pond or vault shall be designed to pool water 4 to 6 feet deep with an overflow capacity sufficient to pass the developed 100-year peak flow. Settling facilities must have a length-to-width ratio of at least 3:1. The inlet(s) and outlet should be situated to maximize the length of travel through the settling pond or vault. Berms or baffles may be used to lengthen the travel distance if ***site*** constraints limit the inlet/outlet placement. Inlets should be designed to minimize velocity and turbulence. Roof runoff need not be treated before entering an infiltration facility.

❑ PROTECTION FROM UPSTREAM EROSION

Erosion must be controlled during construction of areas upstream of infiltration facilities since sediment-laden runoff can permanently impair the functioning of the system. Erosion control measures must be designed, installed and maintained with great care. Various strategies may be employed to protect infiltration facilities during construction, as described below.

Projects may be phased to limit clearing and minimize the time that soils are exposed. An alternative to this approach is to serve the undeveloped area with a large sediment trap on an undeveloped tract with the trap left in place until all clearing and construction is complete and all permanent landscaping is in place. See *Erosion and Sediment Control Standards* (detached Appendix D) for design details. At the completion of all construction, the sediment trap must be cleaned out (taking care that no sediment enters the drainage system) and filled in, and the flow routed to the permanent drainage system.

Another alternative for subdivisions is to stage excavation of the pond as follows:

1. Bottom elevation of the pond prior to paving of plat roadways: 3 feet above the final pond bottom elevation. At this stage of rough grading, the facility may be used to meet sediment retention requirements.
2. Bottom elevation of the pond during and after paving and prior to construction of 80% of the houses: 18 inches above the final pond bottom elevation with upstream sediment retention, as needed. At this stage, the pond will serve as an interim flow control facility pending final stabilization of the ***site***. Note that KCC 9.04.090 requires that flow control facilities be operational prior to the construction of any improvements.

DRAFT

❑ FACILITY CONSTRUCTION GUIDELINES

Excavation of infiltration facilities should be done with a backhoe working at "arms length" to **minimize disturbance and compaction of the completed infiltration surface**. If the bottom of the facility will be less than three feet below final grade, the facility area should be cordoned off so that construction traffic does not traverse the area. The exposed soil should be inspected by a soils engineer after excavation to confirm that soil conditions are suitable.

Two simple **staff gages for measuring sediment depth** should be installed at opposite ends of the bottom of ponds. The gages may consist of 1-inch pipe driven at least one foot into the soil in the bottom of the pond, with 12 inches of the pipe protruding above grade.

❑ OFFSITE GROUNDWATER LEVEL IMPACTS

Potential impacts to groundwater levels off the ***project site*** should be considered. In general, replacing vegetation with impervious cover will increase the total annual volume of runoff generated on a ***site***. Infiltrating this runoff will tend to increase ground water recharge, which may affect groundwater levels offsite. The impacts of infiltration could include increased water to ***landslide hazard areas***, increased groundwater resources available, increased water levels in closed depressions, and higher groundwater levels. Higher groundwater levels offsite could result in increased flooding of basements, or impaired functioning of infiltration systems resulting in surface water flooding. Evidence of offsite groundwater flooding problems should be examined during the offsite analysis required under Core Requirement #2 (see Section 1.2.2).

In general, groundwater level impacts will be very difficult to reduce, and there are no specific requirements that apply in many cases. The design engineer is encouraged to consider whether there are any feasible approaches to reduce groundwater flooding impacts, such as moving facilities or changing facility geometry, retaining forest cover, minimizing impervious coverage, or fixing downstream problems.

❑ GROUNDWATER PROTECTION

The protection of groundwater quality is recognized as an issue of greater concern than in the past, and groundwater protection standards are changing rapidly. Increased safeguards are often required. The applicant should check the Critical Aquifer Recharge (CARA) map, sole source aquifer designations, and wellhead protection areas mapped by the Washington State Department of Health, to determine if the project lies within a ***groundwater protection area*.**

The **groundwater protection requirements** of this manual set forth in Chapter 1 call for implementing one of the following actions when infiltrating runoff from pollution-generating surfaces:

1. Provide water quality treatment prior to infiltration as specified in Core Requirement #8 and Special Requirement #5, or
2. Demonstrate that the soil beneath the infiltration facility has properties that reduce the risk of groundwater contamination from typical stormwater runoff. Such properties are defined below depending on whether the project is located outside of or within a ***groundwater protection area***.

Note: The soil properties given below are primarily for groundwater protection and do not necessarily satisfy other protection needs. For example, projects infiltrating runoff within a quarter-mile of a Sensitive Lake may still be required to provide water quality treatment to meet the resource protection needs of the Sensitive Lake. See Core Requirement #8 (Section 1.2.8) for additional WQ requirements.

Soil Properties Required for Groundwater Protection Outside of Groundwater Protection Areas

For infiltration facilities located outside of ***groundwater protection areas***, acceptable groundwater protection is provided by the soil if the first two feet or more of the soil beneath the infiltration facility has a *cation exchange capacity*[9] greater than 5 and an *organic content*[10] greater than 0.5%, AND meets **one of the following** criteria:

a) The soil has a measured infiltration rate less than or equal to 9 inches per hour[11] or is logged as one of the classes from the **USDA Textural Triangle** (Figure 5.4.1.A, p. 5-65), excluding sand and loamy sand~~.~~ (*Note: ~~Soil~~ soil texture classes other than sand and loamy sand may be assumed to have an infiltration rate of less than or equal to 9 inches per hour without doing field testing to measure rates~~.~~*[12]), OR

~~b) The soil has a *cation exchange capacity*[13] greater than 5 and an *organic content*[14] greater than 0.5%.~~

~~c)~~b) The soil is composed of less than 25% gravel by weight with at least 75% of the soil passing the #4 sieve. The portion passing the #4 sieve must meet one of the following gradations:

- At least 50% must pass the #40 sieve and at least 2% must pass the #100 sieve, or
- At least 25% must pass the #40 sieve and at least 5% must pass the #200 sieve.

Note: These soil properties must be met by the native soils onsite. Soil may not be imported in order to meet groundwater protection criteria without an approved adjustment.

DRAFT

---

[9] *Cation exchange capacity* shall be tested using EPA Laboratory Method 9081.

[10] *Organic content* shall be measured on a dry weight basis using method ASTM D2974 for the fraction passing the #40 sieve.

[11] See discussion of the measured infiltration rate on page 5-60.

[12] Criteria (a) is based on the relationship between infiltration rates and soil texture. However, there are many other factors, such as high water table, presence of impervious strata or boulders close to the surface, etc., which also affect infiltration rate. When any such condition is suspected because soils are coarser than expected from the measured infiltration rate, a sieve analysis should be done to establish soil characteristics. The judgment of a geotechnical engineer, geologist or soil scientist shall determine whether a sieve analysis is warranted. The sieve analysis must meet Criteria (c) above to be considered protective.

[13] *Cation exchange capacity* shall be tested using EPA Laboratory Method 9081.

[14] *Organic content* shall be measured on a dry weight basis using method ASTM D2974 for the fraction passing the #40 sieve.

Soil Properties Required within Groundwater Protection Areas

For projects located within ***groundwater protection areas***, acceptable groundwater protection is provided by the soil if the first two feet or more of the soil beneath the infiltration facility has a **cation exchange capacity** greater than 5 and an **organic content** greater than 0.5%, AND meets **one of the following** criteria:

a) The soil has a **measured infiltration rate** less than or equal to **2.4 inches per hour** or is logged as one of the classes from the **USDA Textural Triangle** (Figure 5.4.1.A, p. 5-65), excluding sand, loamy sand, and sandy loam~~.~~ (*Note: ~~Soil~~ soil triangle texture classes other than sand, loamy sand, and sandy loam may be assumed to have an infiltration rate of less than or equal to 2.4 inches per hour without doing field testing to measure rates~~.~~*[15]), OR

~~b) The soil has a **cation exchange capacity** greater than 5 and an **organic content** greater than 0.5%, and the infiltration rate must be less than or equal to 9 inches per hour.~~

~~c)~~b) The soil has a measured infiltration rate less than or equal to 9 inches per hour, and it must be composed of less than 25% gravel by weight with at least 75% of the soil passing the #4 sieve. The portion passing the #4 sieve must meet one of the following gradations:

- At least 50% must pass the #40 sieve and at least 2% must pass the #100 sieve, or
- At least 25% must pass the #40 sieve and at least 5% must pass the #200 sieve.

Note: The above soil properties must be met by the native soils onsite. Soil may not be imported in order to meet groundwater protection criteria without an approved adjustment.

FIGURE 5.4.1.A USDA TEXTURAL TRIANGLE

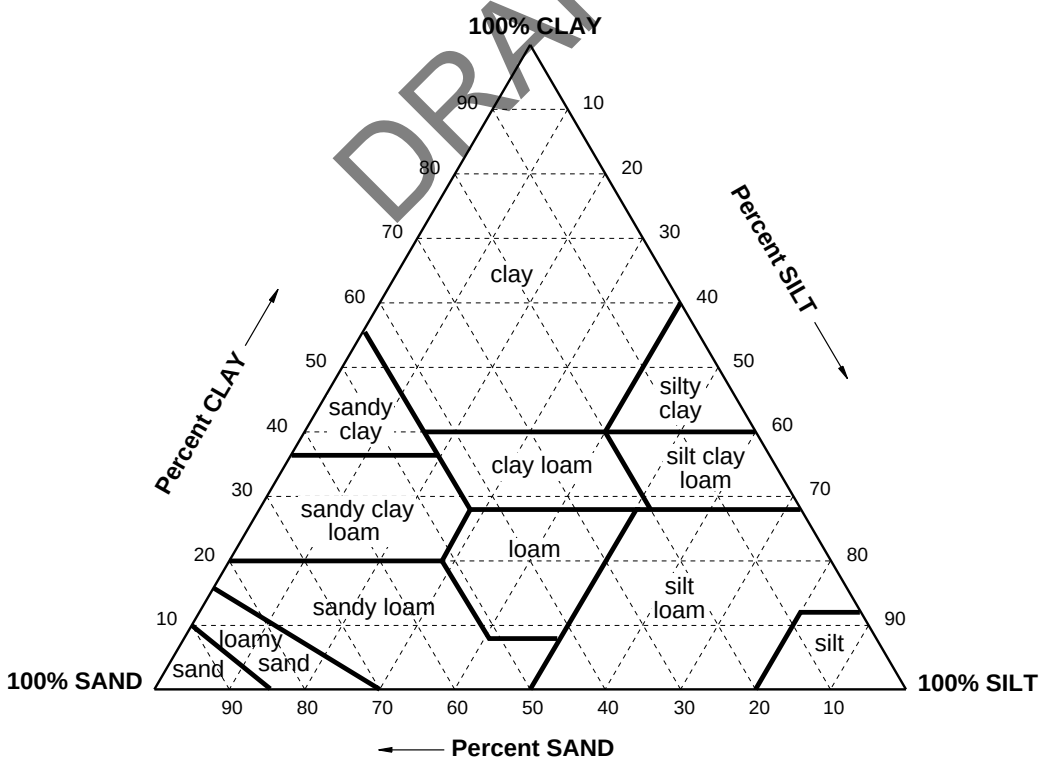

DRAFT

[15] Concerns regarding Criteria (a) and the correspondence between the measured infiltration rate and soil textures are the same as discussed for projects outside sole-source aquifer areas.

Infiltration near Water Supply Wells

The design engineer should consider the following when designing infiltration facilities near water supply wells:

1. In no case should infiltration facilities be placed closer than 100 feet from drinking water wells and 200 feet from springs used for drinking water supplies. Where water supply wells exist nearby, it is the responsibility of the applicant's engineer to locate such wells, meet any applicable protection standards, and assess possible impacts of the proposed infiltration facility on groundwater quality. If negative impacts on an individual or community water supply are possible, additional runoff treatment must be included in the facility design, or relocation of the facility should be considered.
2. All infiltration facilities located within the one-year capture zone of any well should be preceded by a water quality treatment facility.

Infiltration near Steep Slopes and Landslide Hazard Areas

The following restrictions apply to the design of infiltration systems located near a slope steeper than 15%.

1. Infiltration facilities (excluding individual lot systems) shall be placed no closer to the top of slope than the distance equal to the total vertical height of the slope area that is steeper than 15%. Where infiltration facilities are proposed within 200 feet of a ***steep slope hazard area*** or a ***landslide hazard area***, a detailed geotechnical evaluation may be required.
2. Individual lot infiltration and dispersion systems rather than a centralized infiltration facility should be used to the extent feasible, except for lots immediately adjacent to a ***landslide hazard area***. The runoff from such lots should be discharged into a tightline system, if available, or other measures should be implemented as recommended by a geotechnical engineer, engineering geologist, or DDES staff geologist.

DRAFT

5.4.2 INFILTRATION PONDS

Infiltration ponds may be constructed by excavating or constructing berms. See Figure 5.4.2.A (p. 5-69) for a typical detail.

5.4.2.1 DESIGN CRITERIA

General

The following criteria for ponds are in addition to the general requirements for infiltration facilities specified in Section 5.4.1:

1. The proposed **pond bottom** must be at least 3 feet above the seasonal high groundwater level and have at least 3 feet of permeable soil beneath the bottom.
2. Infiltration ponds are **not allowed on slopes greater than 25%** (4:1). A geotechnical analysis and report may be required if located on slopes steeper than 15% or within 200 feet of a ***steep slope hazard area*** or ***landslide hazard area***.
3. The infiltration surface **must be in native soil** (excavated at least one foot in depth).
4. **Maintenance access** shall be provided to both the presettling pond or vault (if provided) and the infiltration pond.
5. An **overflow structure** such as that shown in Figure 5.3.1.C (p. 5-28) shall be provided. In addition, infiltration ponds shall have an emergency spillway as required for detention ponds in Section 5.3.1.1 (p. 5-18).
6. The criteria for **general design**, side slopes, embankments, planting, maintenance access, access roads, fencing, signage, and right-of-way shall be the **same as for detention ponds** (see Section 5.3.1, p. 5-17), except as required for the infiltration design.

DRAFT

Setbacks

1. The **toe of the exterior slope** of an infiltration pond berm embankment shall be set back 5 feet from the tract, easement, or property line.
2. The tract, easement, or property line on an **infiltration pond cut slope** shall be set back 5 feet from the emergency overflow water surface.
3. The infiltration pond design water surface shall be set back 100 feet from proposed or existing **septic system drainfields**. This setback may be reduced to 30 feet with approval from the Seattle - King County Department of Public Health.
4. The infiltration pond design water surface shall be a minimum of 50 feet from any ***steep slope hazard area,*** unless an approved geotechnical report recommends closer placement. The facility soils report must address the potential impact of infiltration on the ***steep slope hazard area***.
5. **Building setback lines for adjacent internal lots** shall be 20 feet. These may be reduced to the minimum allowed by zoning if the facility soils report addresses the potential impacts of the facility phreatic surface on structures so located.
6. The infiltration pond design water surface shall be set back 20 feet from **external tract, easement or property lines**. This may be reduced to 5 feet if the facility soils report addresses the potential impacts of the facility phreatic surface on existing or future structures located on adjacent external lots.

5.4.2.2 METHODS OF ANALYSIS

The size of the pond shall be determined using the hydrologic analysis and routing methods described for detention ponds in Chapter 3. The **storage volume** in the pond is used to detain runoff prior to infiltration. The **stage/discharge curve** shall be developed from the design infiltration rate determined according to Section 5.4.1 (p. 5-59). At a given stage the discharge may be computed using the **area of pervious surface** through which infiltration will occur (which will vary with stage) multiplied by the recommended design infiltration rate (in appropriate units). Berms (which should be constructed of impervious soil such as till), maintenance access roads, and lined swales should not be included in the design pervious surface area.

Note: The KCRTS program "Size a Facility" module can provide a preliminary pond volume for a given side slope, storage depth, design infiltration rate, and allowable release rate through a control structure (if applicable).

DRAFT

FIGURE 5.4.2.A TYPICAL INFILTRATION POND

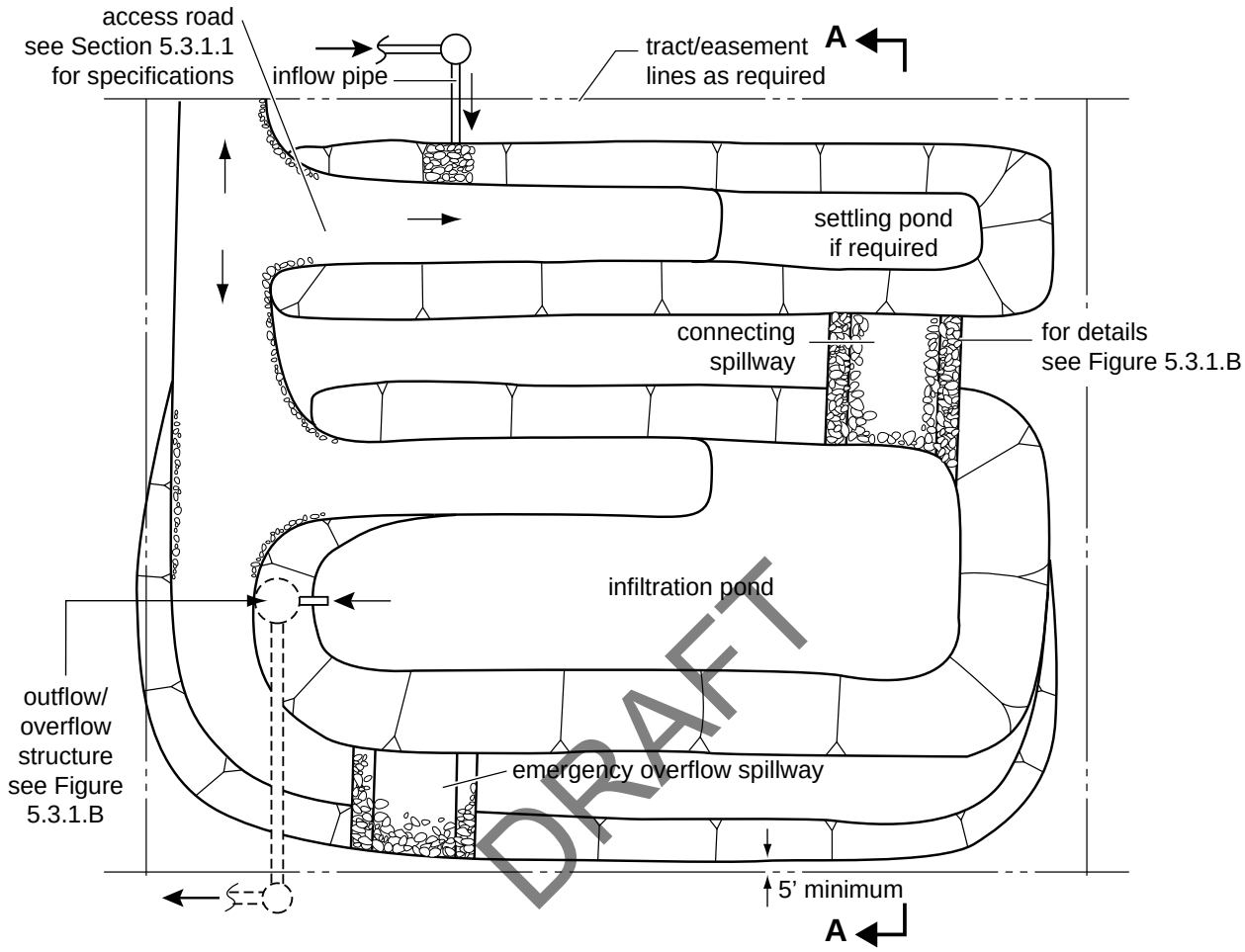

PLAN VIEW

overflow/emergency overflow
provided per Section 5.3.1.1

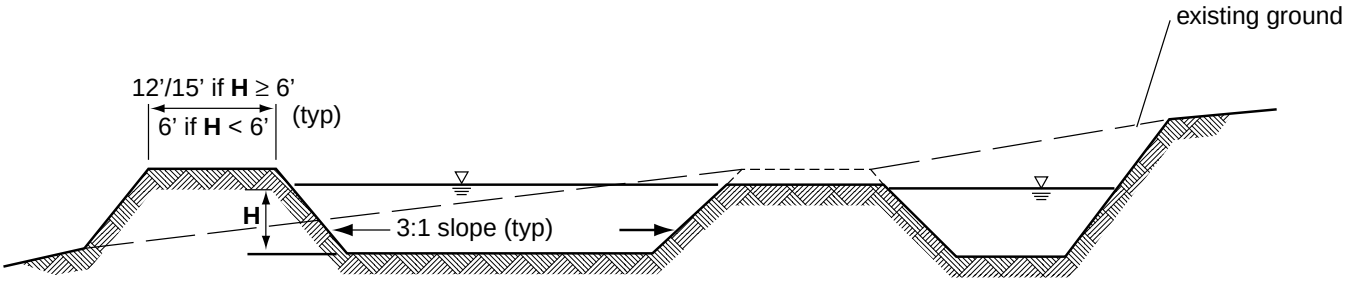

SECTION A-A

NTS

NOTE:
Detail is a schematic representation only. Actual configuration will vary depending on specific site constraints and applicable design criteria.

5.4.3 INFILTRATION TANKS

Infiltration tanks consist of underground pipe that has been perforated to allow detained stormwater to be infiltrated. Figure 5.4.3.A (p. 5-72) shows a typical infiltration tank.

5.4.3.1 DESIGN CRITERIA

General

The following criteria for tanks are in addition to the general requirements for infiltration facilities specified in Section 5.4.1:

1. The proposed **tank trench bottom** shall be at least 3 feet above the seasonal high groundwater level and have at least 3 feet of **permeable soil** beneath the trench bottom.
2. Infiltration tanks are **not allowed on slopes greater than 25%** (4:1). A geotechnical analysis and report may be required if located on slopes steeper than 15% or within 200 feet of a ***steep slope hazard area*** or ***landslide hazard area***.
3. The infiltration surface elevation (bottom of trench) **must be in native soil** (excavated at least one foot in depth).
4. **Spacing between parallel tanks** shall be calculated using the distance from the lowest trench bottom to the maximum wet season ground water surface (D) and the design width of the trench for a single tank (W). The tank spacing $S = W^2/D$, where S is the centerline spacing between trenches (or tanks) in feet. S shall not be less than W, and S need not exceed 2W.
5. Tanks shall be **bedded and backfilled with washed drain rock** that extends at least 1 foot below the bottom of the tank, at least 2 feet beyond the sides, and up to the top of the tank.
6. Drain rock (3 to $1^1/_2$ inches) shall be completely covered with **filter fabric** prior to backfilling.
7. The **perforations** (holes) in the tank must be one inch in diameter and located in the bottom half of the tank starting at an elevation of 6 inches above the invert of the tank. The number and spacing of the perforations should be sufficient to allow complete utilization of the available infiltration capacity of the soils with a safety factor of 2.0 without jeopardizing the structural integrity of the tank.
8. Infiltration tanks shall have an overflow structure equipped with a **solid bottom riser** (with clean-out gate) and outflow system for safely discharging overflows to the downstream conveyance system or another acceptable discharge point.
9. The criteria for **general design,** materials, structural stability, buoyancy, maintenance access, access roads, and right-of-way shall be the **same as for detention tanks** (see Section 5.3.2, p. 5-31), except for features needed to facilitate infiltration.

Setbacks

1. Tanks shall be set back 100 feet from proposed or existing **septic system drainfields**. This setback may be reduced to 30 feet with approval from the Seattle - King County Department of Public Health.
2. All tanks shall be a minimum of 50 feet from any ***steep slope hazard area***. The facility soils report must address the potential impact of infiltration on the ***steep slope hazard area***.
3. **Building setback lines for adjacent internal lots** shall be 20 feet. These may be reduced to the minimum allowed by zoning if the facility soils report addresses the potential impacts of the facility phreatic surface on structures so located.
4. Infiltration tanks shall be set back 20 feet from **external tract, easement, or property lines**. This may be reduced to 5 feet if the facility soils report addresses the potential impacts of the facility phreatic surface on existing or future structures located on adjacent external lots.

DRAFT

5.4.3.2 METHODS OF ANALYSIS

The **size of the tank** shall be determined using the hydrologic analysis and routing methods described in Chapter 3, and the **stage/discharge curve** developed from the recommended design infiltration rate as described in Section 5.4.1 (p. 5-59). The **storage volume** in the tank is used to detain runoff prior to infiltration with the perforations providing the outflow mechanism. At any given stage, the discharge may be computed using the **area of pervious surface** through which infiltration will occur multiplied by the recommended design infiltration rate (in appropriate units). The area of pervious surface used for determining the potential infiltration from the tank shall be computed by taking the lesser of the trench width, or two times the width of the tank, and then multiplying by the length of the tank (assuming infiltration through the bottom of the trench only).

Note: The KCRTS program "Size a Facility" module can provide a preliminary tank length for a given tank diameter, storage depth, design infiltration rate, and allowable release rate through a control structure (if applicable).

DRAFT

FIGURE 5.4.3.A TYPICAL INFILTRATION TANK

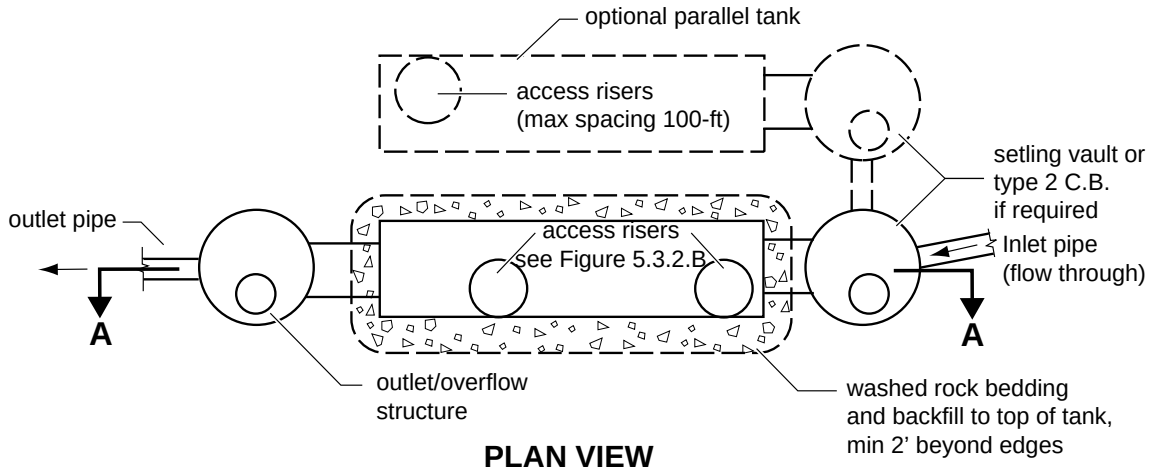

PLAN VIEW
NTS
optional design for parallel tank shown dashed

DRAFT

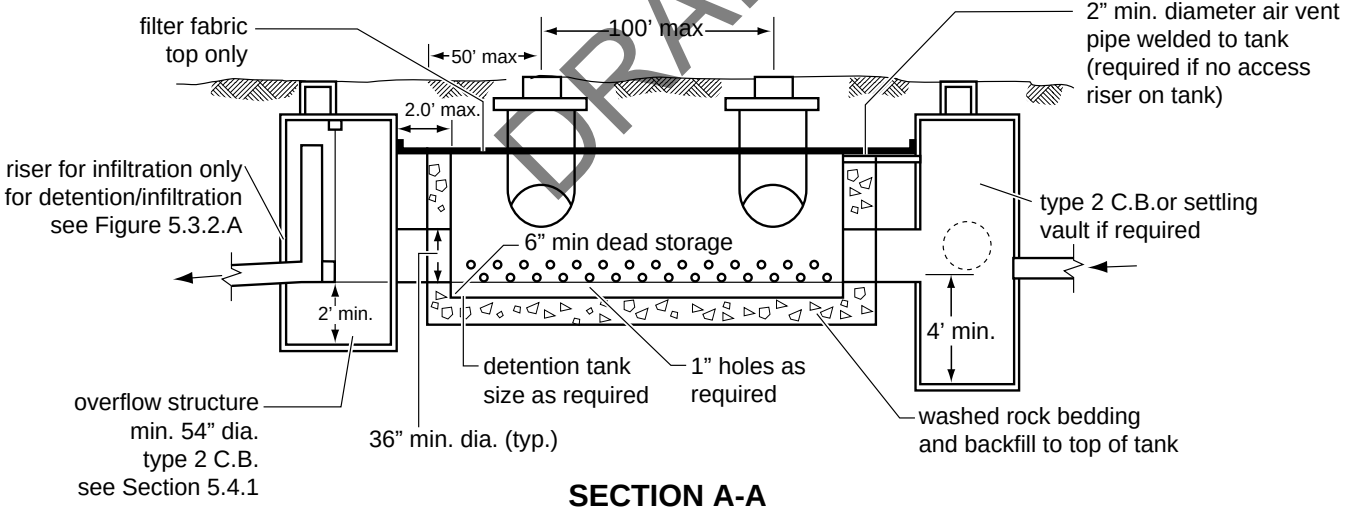

SECTION A-A
NTS

NOTES:

- All metal parts corrosion resistant. Steel parts galvanized and asphalt coated (treatment 1 or better).
- Filter fabric to be placed over washed rock backfill.

5.4.4 INFILTRATION VAULTS

Infiltration vaults consist of a bottomless concrete vault structure placed underground in native infiltrative soils. Infiltration is achieved through the native soils at the bottom of the structure.

Infiltration vaults are similar to detention vaults. A standard detention vault detail is shown in Figure 5.3.3.A (p. 5-37). Overflow riser details are shown in Section 5.3.4 beginning on page 5-38.

5.4.4.1 DESIGN CRITERIA

General

The following criteria for vaults are in addition to the general requirements for infiltration facilities specified in Section 5.4.1:

1. The proposed **vault bottom** shall be at least 3 feet above the seasonal high groundwater level and have at least 3 feet of permeable soil beneath the bottom.
2. Infiltration vaults are **not allowed on slopes greater than 25%** (4:1). A geotechnical analysis and report may be required if located on slopes steeper than 15% or within 200 feet of a ***steep slope hazard area*** or ***landslide hazard area***.
3. The vault bottom **must be in native soil** (excavated at least one foot in depth).
4. Infiltration vaults shall have a **solid bottom riser** (with clean-out gate) and outflow system for safely discharging overflows to the downstream conveyance system or another acceptable discharge point.

DRAFT

Structural Stability

All vaults shall meet structural requirements for overburden support and H-20 vehicle loading. Vaults located under roadways must meet the live load requirements of the *King County Road Standards*. Cast-in-place wall sections shall be designed as retaining walls. Structural designs for vaults must be stamped by a licensed structural engineer unless otherwise approved by DDES. Bottomless vaults shall be provided with footings placed on stable, well-consolidated native material and sized considering overburden support, traffic loading (assume maintenance traffic, if placed outside ROW), and lateral soil pressures when the vault is dry. Infiltration vaults shall not be allowed in fill slopes unless analyzed in a geotechnical report for stability. The infiltration surface at the bottom of the vault must be in native soil.

Access Requirements

Same as specified for detention vaults in Section 5.3.3.1 (p. 5-35).

Access Roads

Same as specified for detention vaults in Section 5.3.3.1 (p. 5-35).

Right-of-Way

Infiltration vaults to be maintained by King County but not located in King County right-of-way shall be in a tract dedicated to King County. Any tract not abutting public right-of-way will require a 15-foot wide extension of the tract to accommodate an access road to the vault.

Setbacks

1. Infiltration vaults shall be set back 100 feet from proposed or existing **septic system drainfields**. This setback may be reduced to 30 feet with approval from the Seattle - King County Department of Public Health.

2. Infiltration vaults shall be a minimum of 50 feet from any ***steep slope hazard area***. The facility soils report must address the potential impact of infiltration on the ***steep slope hazard area***.
3. **Building setback lines for adjacent internal lots** shall be 20 feet. These may be reduced to the minimum allowed by zoning if the facility soils report addresses the potential impacts of the facility phreatic surface on structures so located.
4. Infiltration vaults shall be set back 20 feet from **external tract, easement, or property lines**. This may be reduced to 5 feet if the facility soils report addresses the potential impacts of the facility phreatic surface on existing or future structures located on adjacent external lots.

5.4.4.2 METHODS OF ANALYSIS

The **size of the vault** shall be determined using the hydrologic analysis and routing methods described in Chapter 3 and the **stage/discharge curve** developed from the recommended design infiltration rate as described in Section 5.4.1 (p. 5-59). The **storage volume** in the vault is used to detain runoff prior to infiltration. At any given stage, the discharge may be computed using the **area of pervious surface** through which infiltration will occur (the exposed soil comprising the vault bottom) multiplied by the recommended design infiltration rate (in appropriate units).

Note: The KCRTS program "Size a Facility" module can provide preliminary vault volume (modeled as an infiltration pond with vertical side slopes) for a given storage depth, design infiltration rate, and allowable release rate through a control structure (if applicable).

DRAFT

5.4.5 INFILTRATION TRENCHES

Infiltration trenches can be a useful alternative for developments with constraints that make siting a pond difficult. Infiltration trenches may be placed beneath parking areas, along the ***site*** periphery, or in other suitable linear areas.

5.4.5.1 DESIGN CRITERIA

General

The following criteria for trenches are in addition to the general requirements for infiltration facilities specified in Section 5.4.1:

1. The proposed **trench bottom** must be at least 3 feet above the seasonal high groundwater level and 3 feet below finished grade.
2. There must be at least 3 feet of **permeable soil** beneath the trench bottom.
3. The infiltration surface elevation (bottom of trench) must be in **native soil** (excavated at least one foot in depth).
4. Infiltration trenches are **not allowed on slopes greater than 25%** (4:1). A geotechnical analysis and report may be required if located on slopes steeper than 15% or within 200 feet of a ***steep slope hazard area*** or ***landslide hazard area***.
5. Trenches shall be a minimum of **24 inches wide**.
6. Trenches shall be **backfilled with $1^1/_2$ - $^3/_4$-inch washed rock**, completely surrounded by filter fabric and overlain by a minimum 1 foot of compact backfill.
7. Level 6-inch minimum diameter rigid **perforated distribution pipes** shall extend the length of the trench. Distribution pipe inverts shall be a minimum of 2 feet below finished grade. Provisions (such as clean-out wyes) shall be made for cleaning the distribution pipe.
8. Alternative trench-type systems such as **pre-fabricated bottomless chambers** that provide an equivalent system may be used at the discretion of DDES.
9. Two feet minimum **cover** shall be provided in areas subject to vehicle loads.
10. Trenches shall be **spaced** no closer than 10 feet, measured on center.

DRAFT

Setbacks

1. Trench systems shall be set back 100 feet from proposed or existing **septic system drainfields**. This setback may be reduced to 30 feet with approval from the Seattle - King County Department of Public Health.
2. Trench systems shall be a minimum of 50 feet from any ***steep slope hazard area***. The facility soils report must address the potential impact of infiltration on the ***steep slope hazard area***.
3. **Structures** shall be set back 20 feet from individual trenches. This may be reduced if the facility soils report addresses potential impacts of trench phreatic surface on structures so located.

5.4.5.2 METHODS OF ANALYSIS

The sections and lengths of trenches shall be determined using the hydrologic analysis and routing methods for flow control design described in Chapter 3. The **stage/discharge curve** shall be developed from the design infiltration rate recommended by the soils engineer, as described in Section 5.4.1 (p. 5-59). **Storage volume** of the trench system shall be determined considering void space of the washed rock backfill and maximum design water surface level at the crown of the distribution pipe. At any given

stage, the discharge may be computed using the **area of pervious surface** through which infiltration will occur (trench bottom area only) multiplied by the recommended design infiltration rate (in appropriate units).

Note: The KCRTS program "Size a Facility" module can provide a preliminary total trench bottom area for a given trench depth (from spring line), design infiltration rate, and allowable release rate through a control structure (if applicable). The program assumes 30% void space in the trench backfill.

DRAFT

5.4.6 SMALL INFILTRATION BASINS

Small infiltration basins consist of a bottomless, precast concrete catch basin or equivalent structure placed in an excavation filled with washed drain rock. Stormwater infiltrates through the drain rock into the surrounding soil. This facility is intended for use with contributing surface areas of less than 5,000 square feet. Presettlement is most easily provided by a catch basin or manhole with a turned-down elbow; see Figure 5.4.6.A (below) for a generic design sketch. If water quality treatment is required by Core Requirement #8 or Special Requirement #5, runoff from pollution-generating impervious surfaces must be treated before it enters the infiltration portion of the system.

5.4.6.1 DESIGN CRITERIA

The design criteria for small infiltration basins are essentially the same as for infiltration tanks (see Sections 5.4.1 and 5.4.3), except that only one infiltration rate test and soil log is required for each small infiltration basin. Access into the basins shall be provided for inspection and maintenance. Designs may incorporate Type II catch basins, but equivalent designs using other materials may be accepted.

FIGURE 5.4.6.A CONCEPTUAL SMALL INFILTRATION BASIN

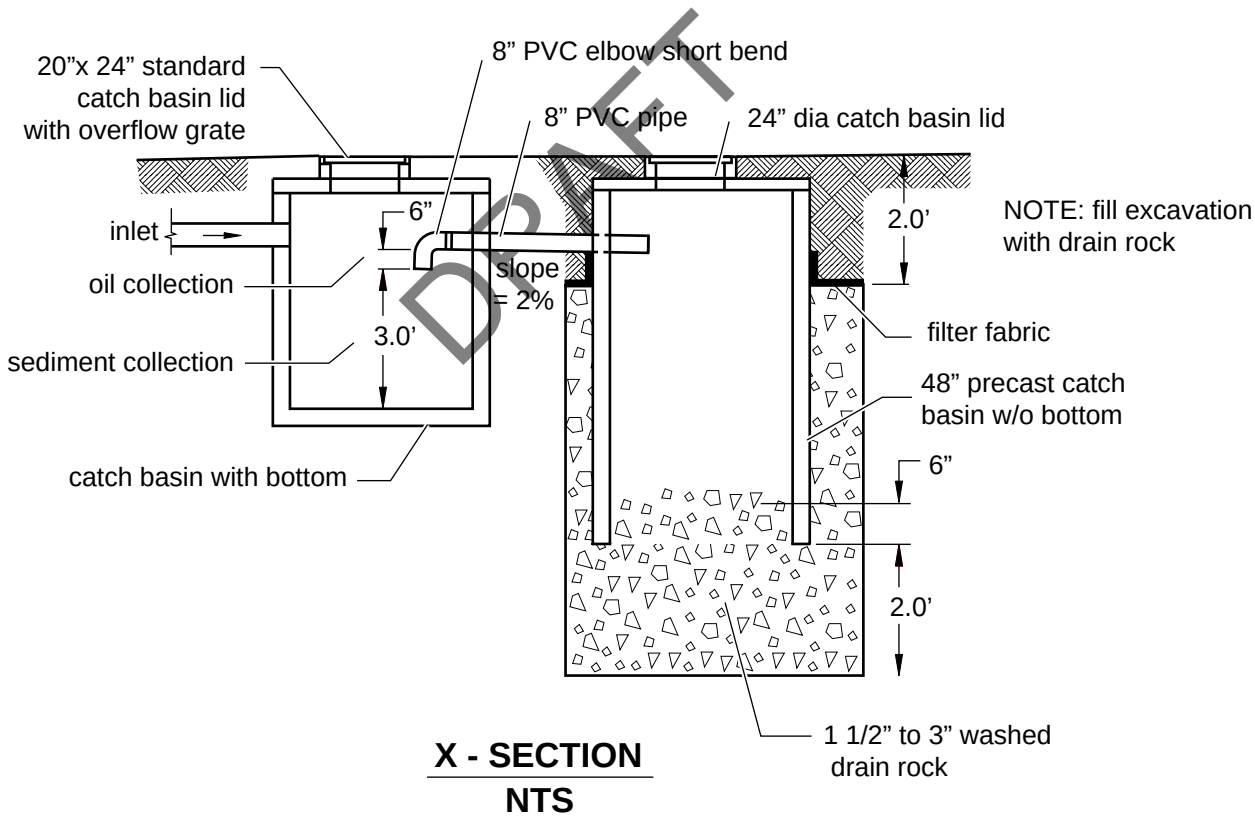

CHAPTER 6

WATER QUALITY DESIGN

KING COUNTY, WASHINGTON
SURFACE WATER DESIGN MANUAL

DRAFT

Section 6.1	**Water Quality Menus**	**6-3**
Section 6.1.1	Basic Water Quality Menu	6-4
Section 6.1.2	Enhanced Basic Water Quality Menu	6-6
Section 6.1.3	Sensitive Lake Protection Menu	6-8
Section 6.1.4	Sphagnum Bog Protection Menu	6-12
Section 6.1.5	High-Use Menu	6-13
Section 6.2	**General Requirements for WQ Facilities**	**6-17**
Section 6.2.1	Water Quality Design Flows	6-17
Section 6.2.2	Sequence of Facilities	6-19
Section 6.2.3	Setbacks, Slopes, and Embankments	6-21
Section 6.2.4	Facility Liners	6-23
Section 6.2.5	Flow Splitter Designs	6-29
Section 6.2.6	Flow Spreading Options	6-33
Section 6.3	**Biofiltration Facility Designs**	**6-39**
Section 6.3.1	Basic Biofiltration Swales	6-39
Section 6.3.2	Wet Biofiltration Swales	6-55
Section 6.3.3	Continuous Inflow Biofiltration Swales	6-58
Section 6.3.4	Basic Filter Strips	6-59
Section 6.3.5	Narrow Area Filter Strips	6-66
Section 6.4	**Wetpool Facility Designs**	**6-69**
Section 6.4.1	Wetponds — Basic and Large	6-69
Section 6.4.2	Wetvaults	6-83
Section 6.4.3	Stormwater Wetlands	6-89
Section 6.4.4	Combined Detention and Wetpool Facilities	6-95
Section 6.5	**Media Filtration Facility Designs**	**6-103**
Section 6.5.1	General Requirements	6-103
Section 6.5.2	Sand Filters — Basic and Large	6-104
Section 6.5.3	Sand Filter Vaults	6-124
Section 6.5.4	Linear Sand Filters	6-130
Section 6.5.5	StormFilter®	6-135
Section 6.6	**Oil Control Facility Designs**	**6-139**
Section 6.6.1	Catch Basin Inserts	6-139
Section 6.6.2	Oil/Water Separators	6-145

DRAFT

CHAPTER 6

WATER QUALITY DESIGN

This chapter presents the King County approved methods, criteria, and details for analysis and design of water quality facilities pursuant to Core Requirement #8, discussed in Section 1.2.8, and Special Requirement #5, discussed in Section 1.3.5.

Chapter Organization

The information in this chapter is organized into the following six main sections:

- Section 6.1, "Water Quality Menus" (p. 6-3), details the **area-specific water quality menus** referred to in Core Requirement #8 of Chapter 1, and the **High-Use Menu** referred to in Special Requirement #5, also in Chapter 1.
- Section 6.2, "General Requirements for WQ Facilities" (p. 6-17), presents general design requirements and details pertinent to all water quality facilities.
- Section 6.3, "Biofiltration Facility Designs" (p. 6-39), presents the details for analysis and design of biofiltration facilities such as **biofiltration swales** and **filter strips**.
- Section 6.4, "Wetpool Facility Designs" (p. 6-69), presents the details for analysis and design of wetpool water quality facilities such as **wetponds**, **wetvaults**, **stormwater wetlands**, and combinations of these facilities with detention facilities.
- Section 6.5, "Media Filtration Facility Designs" (p. 6-103), presents the details for analysis and design of filtration facilities such as **sand filters** and **StormFilters®**.
- Section 6.6, "Oil Control Facility Designs" (p. 6-139), presents the details for analysis and design of oil control facilities such as **catch basin inserts** and **oil/water separators**.

DRAFT

Required vs. Recommended Design Criteria

Both required and recommended design criteria are presented in this chapter. Criteria stated using "shall" or "must" are mandatory, to be used unless there is a good reason to deviate as allowed under the adjustment process in Section 1.4. These criteria are **required design criteria** and generally affect facility performance or critical maintenance factors.

Sometimes options are stated as part of the required design criteria using the language "should" or "may." These latter criteria are really **recommended design criteria**, but are so closely related to the required criteria that they are placed with it. In some cases **recommended design features** are presented under a separate heading in the "Design Criteria" sections.

Use of Chapter 6 Figures: The figures provided in Chapter 6 illustrate **one example** of how the WQ facility design criteria may be applied. There may be other engineering solutions that also meet the design criteria. Those options are also allowed unless it is the judgment of DDES that the option has other problems that render it a poor engineering choice. Although the figures are meant to illustrate many of the most important design criteria, they may not show **all** criteria that apply. In general, the figures in Chapter 6 are not used to specify requirements unless they are indicated elsewhere in the Manual.

Water Quality Facility Sizing Worksheets

To make the water quality facility sizing methods more standardized for plan review purposes, sizing worksheets are included in Reference Section 8-C for the major water quality facilities. These worksheets are based on the step by step sizing methods given for the water quality facilities in this Chapter. Most design criteria that are not required for facility sizing are omitted from the worksheets. It is the designer's responsibility to make sure that all the required design criteria for each water quality facility are provided on submitted plans.

Please note that the worksheets are dated in the footer of each page. It is the designer's responsibility to ensure that any Manual updates affecting the sizing procedure or design criteria after that date are incorporated into the worksheet.

If there are instances in which the worksheet differs from the Design criteria in the text of this Chapter, the criteria as given in this Chapter, and as modified by subsequent updates, shall be considered the governing criteria.

DRAFT

6.1 WATER QUALITY MENUS

This section identifies facility choices and, in some cases, non-structural options that comprise the water quality (WQ) menus referred to in Chapter 1. The menus covered in this section are as follows:

- "Basic Water Quality Menu," Section 6.1.1 (p. 6-4)
- "Enhanced Basic Water Quality Menu," Section 6.1.2 (p. 6-6)
- "Sensitive Lake Protection Menu," Section 6.1.3 (p. 6-8)
- "Sphagnum Bog Protection Menu," Section 6.1.4 (p. 6-12)
- "High-Use Menu," Section 6.1.5 (p. 6-14).

Guide to Applying Water Quality Menus

1. Determine the WQ treatment area in which your project is located by consulting the Water Quality (WQ) Applications map (back pocket). If this determination cannot be made from the map, a more detailed delineation of WQ treatment areas is available on King County's Geographic Information System. The map also lists some of the inventoried sphagnum bog wetlands using the numbering convention of the King County wetlands inventory.
2. Read Core Requirement #8 to determine if any exemptions apply to your project.
3. If the map indicates your project is within a Sensitive Lake WQ Treatment Area or a Sphagnum Bog WQ Treatment Area and no exemptions apply, determine if the ***project site*** will actually drain to the sensitive lake or bog. For instance, projects near drainage boundaries, especially in areas with underground storm drains, may drain in a direction different from the surface topography. If the ***project site*** does not drain to the sensitive lake or bog, it is located within the Basic WQ Treatment Area.
4. Check the detailed threshold and exceptions information in Section 1.2.8.1 to determine which WQ menu applies to all or part of your project. On some ***sites***, more than one menu may apply depending on proposed land cover, soil characteristics, and how runoff from developed surfaces will be collected.
5. Find the WQ menu in this section that applies to your project. Each menu presents two or more water quality treatment options; **select one**. Since all options are sized to provide equivalent removal of the target pollutant, the choice will depend only on the constraints and opportunities of your ***site***. (If detention requirements apply, it will usually be most economical to use the combined WQ/detention pond option). Detailed facility designs for the option selected are given in Sections 6.3 (p. 6-39), 6.4 (p. 6-69), and 6.5 (p. 6-103). Information about non-structural options is included in the menu itself.
6. Read the implementation requirements in Chapter 1 (Section 1.2.8.2) that address pollution-generating pervious surfaces. For some WQ menus, and in some situations, the facility requirements for these surfaces are eased.
7. Determine if your project fits the definition of a ***high-use site*** (see Special Requirement #5 in Chapter 1). If it does, or if you elect to provide enhanced oil pollution control, choose one of the options presented in the High-Use menu, Section 6.1.5. Detailed designs for oil control facilities are given in Section 6.6 (p. 6-139).
8. General water quality facility requirements (see Section 6.2, p. 6-17) apply to all menus and may affect the placement of facilities on your ***site***.

6.1.1 BASIC WATER QUALITY MENU

Where applied: The Basic Water Quality menu is generally applied to areas outside the drainage basin of sensitive lakes or sphagnum bog wetlands. Such areas are designated and mapped as Basic Water Quality Treatment areas in this manual. For precise details on the application of this and other water quality menus, refer to Section 1.2.8, "Core Requirement #8: Water Quality."

Treatment goal: The Basic Water Quality menu facility choices are designed to remove 80 percent of total suspended solids[1] (TSS) for flows or volumes up to and including the WQ design flow or volume (defined in Section 6.2.1, p. 6-17). Flows and volumes in excess of the WQ design flow or volume may be routed around the WQ facility or may be passed through untreated.

Basis: The goal of 80 percent TSS removal was chosen since it provides good pollutant removal. For higher removals, there are diminishing returns, and relatively less treatment is gained for incremental increases in facility size.

There are **seven facility options** that comprise the Basic WQ menu; **any one option** may be chosen to satisfy the basic WQ protection requirement.

❑ BASIC WQ OPTION 1 — BIOFILTRATION SWALE

A *biofiltration swale* is a long, gently sloped, vegetated ditch designed to filter pollutants from stormwater. Grass is the most common vegetation used. Design details are given in Section 6.3.1 (p. 6-39). The wet biofiltration swale (see Section 6.3.2, p. 6-55) is a variation of the basic biofiltration swale for use where the longitudinal slope is slight (1 to 2 percent or less), water tables are high, or continuous low base flow is likely to result in saturated soil conditions. Under such conditions, healthy grass growth is not possible and wetland plants are used to provide the biofiltration mechanism The continuous inflow biofiltration swale (see Section 6.3.3, p. 6-58) may be used in situations such as roadways where water enters the swale continuously rather than at one discrete inflow point.
Table 6.1.1.A (p. 6-5) summarizes when the biofiltration swale and its variations are to be applied.

DRAFT

❑ BASIC WQ OPTION 2 — FILTER STRIP

A *filter strip* is a grassy area with gentle slopes which treats stormwater runoff from adjacent paved areas before it concentrates into discrete channels; see Section 6.3.4 (p. 6-59) for design details. The narrow area filter strip may be used along a roadway or parking lot in limited space situations as specified in Section 6.3.5 (p. 6-66).

❑ BASIC WQ OPTION 3 — WETPOND

Wetponds are stormwater ponds that maintain a pool of water for most of the year. Stormwater entering the pond is treated during the relatively long residence time within the pond. The sizing method used in this manual is based on a method developed by the Nationwide Urban Runoff Program (NURP). The basic wetpond has a volume three times larger than the volume of runoff from NURP's mean annual storm.[2] See Section 6.4.1 (p. 6-69) for design details.

❑ BASIC WQ OPTION 4 — WETVAULT

An underground vault may be used to comply with the Basic Water Quality menu. The treatment volume is the same as for the basic wetpond; see Section 6.4.2 (p. 6-83) for design details.

[1] This goal assumes the project generates a typical level of TSS (between 30 and 100 milligrams per liter (mg/L). For projects expected to generate a higher level of TSS, such as a sand and gravel operation, a higher treatment goal may be appropriate.

[2] The mean annual storm is derived from dividing the annual rainfall (in inches) by the number of storms per year.

❑ BASIC WQ OPTION 5 — STORMWATER WETLAND

A *stormwater wetland* uses biological processes of plant uptake and bacterial degradation as well as physical and chemical processes and gravity settling to remove pollutants. The footprint of the stormwater wetland is sized based on the wetpond sizing, but the depth of water in the second cell is reduced to encourage plant growth; see Section 6.4.3 (p. 6-89) for design details.

❑ BASIC WQ OPTION 6 — COMBINED DETENTION AND WETPOOL FACILITIES

This option allows the wetpond, wetvault, or stormwater wetland to be placed under the detention facility live storage. Where ***site*** conditions permit its use, this option occupies less space than separate siting of detention and water quality facilities. The basic wetpond portion of the combined facility is sized using the same method as the wetpond in Option 3; see Section 6.4.4 (p. 6-95) for design details.

❑ BASIC WQ OPTION 7 — SAND FILTER

A *sand filter* is a depression or pond with the bottom made of a layer of sand. Stormwater is treated as it percolates downward through the sand layer. Sand filters treat to a higher level of TSS removal than do other water quality facilities. Therefore, slightly less of the annual runoff volume may be treated through the sand filter and still meet the Basic WQ menu goal for TSS removal.

Sand filters may be built as open ponds, underground vaults or linear perimeter trenches; see Section 6.5.2 (p. 6-104) for basic and large sand filters, Section 6.5.3 (p. 6-124) for sand filter vaults, and Section 6.5.4 (p. 6-130) for linear sand filters. A sand layer may also be installed above an infiltration pond or vault to treat stormwater before it infiltrates. Presettling is required prior to sand filtration if no other WQ or detention facility precedes the sand filter.

DRAFT

TABLE 6.1.1.A SELECTION OF BIOFILTRATION SWALE TYPE APPROPRIATE FOR SITE

Site Circumstances	Biofiltration Swale Type
Flow enters at head of swale • Longitudinal slope 1% or less OR • Located downstream of a Level 2 or 3 detention facility	Wet biofiltration swale (Section 6.3.2, p. 6-55)
Flow enters at head of swale • Longitudinal slope between 1 and 2% • Soil saturation or base flows likely in wet season	EITHER wet biofiltration swale (Section 6.3.2), OR basic biofiltration swale (Section 6.3.1, p. 6-39), depending on site; may require underdrain or low-flow drain.
Flow enters at head of swale • Longitudinal slope ≥ 2% • Base flows may or may not be likely in wet season • Not downstream of Level 2 or 3 detention.	Basic biofiltration swale (Section 6.3.1, p. 6-39); may require low-flow drain, depending on site
Along a roadway or parking lot with: • Continuous inflow into the biofilter, OR • Numerous discrete inflows with no single inflow contributing more than about 10% of total swale flow.	Continuous inflow biofiltration swale (Section 6.3.3, p. 6-58)

6.1.2 ENHANCED BASIC WATER QUALITY MENU

Where applied: The Enhanced Basic Water Quality menu[3] is applied where an enhanced level of treatment is required for those development ***sites*** or portions thereof that generate the highest concentrations of metals in stormwater runoff and drain by surface flows to a fish-bearing stream. Acute concentrations of metals such as copper and zinc in streams are toxic to fish. For precise details on the application of this and other water quality menus, refer to Section 1.2.8, "Core Requirement #8: Water Quality."

Note: The Enhanced Basic menu is a stand-alone menu. It integrates the Basic menu level of protection and the additional measures needed to achieve a higher level of metals removal. When this menu is required in Basic WQ Treatment Areas per Section 1.2.8.1-A of Core Requirement #8, it is intended to replace the Basic WQ menu on development ***sites*** *or portions of development* ***sites*** *that generate the highest concentrations of metals in stormwater runoff. When this menu is required in Sensitive Lake WQ Treatment Areas per Section 1.2.8.1-B, it is intended to be combined with the Sensitive Lake Protection Menu such that a facility design option common to both menus must be used.*

Treatment goal: The Enhanced Basic WQ menu is designed to achieve 50 percent total zinc removal for flows up to and including the WQ design flow or volume (defined in Section 6.2.1, p. 6-17).[4]

Basis: The treatment goal is expressed in terms of total zinc removal. Although zinc is not the most toxic metal in stormwater, it is usually present in significant amounts, making it a practical and reliable indicator of overall performance. Many metals are readily adsorbed onto particulates in the runoff, usually the finer fraction of the particulates. Facility combinations that remove more of the particulate load than the Basic menu, including the finer fraction, are specified by the Enhanced Basic menu. Facilities providing organic binding sites that enhance metal adsorption are also specified.

DRAFT

❑ ENHANCE BASIC OPTION 1 — LARGE SAND FILTER

This option includes use of a **large sand filter**, **large sand filter vault**, or **large linear sand filter**. Sizing specifications for these facilities can be found in Sections 6.5.2 (p. 6-104), 6.5.3 (p. 6-124), and 6.5.4 (p. 6-130), respectively. *Note: A presettling cell is required if the sand filter is not preceded by a detention facility.*

❑ ENHANCED BASIC OPTION 2 — STORMWATER WETLAND

Provision of a **stormwater wetland** (see Section 6.4.3, p. 6-89) or **combined detention and stormwater wetland** (see Section 6.4.4, p. 6-95) satisfies the 50 percent zinc removal goal without additional facilities. The large amount of organic material in the stormwater wetland provides organic binding sites and is considered very effective in removing metals.

❑ ENHANCED BASIC OPTION 3 — TWO-FACILITY TREATMENT TRAIN

This option uses one of the basic water quality treatment options listed in Table 6.1.2.A (p. 6-7) followed by a basic sand filter (see Section 6.5.2, p. 6-104), sand filter vault (see Section 6.5.3, p. 6-124), linear sand filter (see Section 6.5.4, p. 6-130), or StormFilter® (see Section 6.5.5, p. 6-135). The StormFilter® is a patented treatment device which uses a specially prepared and patented compost product to remove pollutants from stormwater.

---

[3] The Enhanced Basic WQ menu targets different pollutants than the lake or bog protection menus. It does not necessarily provide a higher level of treatment except for the target pollutant, metal contaminants.

[4] This goal assumes total zinc concentrations for untreated runoff are between 0.10 and 0.25 milligrams per liter (m/L). For projects that are expected to generate higher levels of metals, such as a mining operation, a higher treatment goal may be appropriate.

TABLE 6.1.2.A PAIRED FACILITIES FOR ENHANCED BASIC TREATMENT TRAIN, OPTION 3	
First Basic WQ Facility:	**Second WQ Facility:**
Biofiltration swale (Sections 6.3.1, 6.3.2, and 6.3.3)	Basic sand filter or sand filter vault (Section 6.5.2 or 6.5.3) or StormFilter® (Section 6.5.5)
Filter strip (Sections 6.3.4 and 6.3.5)	Linear sand filter (Section 6.5.4) with no presettling cell needed
Linear sand filter (Section 6.5.4)	Filter strip (Sections 6.3.4 and 6.3.5)
Basic wetpond (Section 6.4.1)	Basic sand filter or sand filter vault (Section 6.5.2 or 6.5.3) or StormFilter® (Section 6.5.5)
Wetvault (Section 6.4.2)	Basic sand filter or sand filter vault (Section 6.5.2 or 6.5.3) or StormFilter® (Section 6.5.5)
Basic combined detention and wetpool facility (Section 6.4.4)	Basic sand filter or sand filter vault (Section 6.5.2 or 6.5.3) or StormFilter® (Section 6.5.5)
Basic sand filter or sand filter vault (Sections 6.5.2 or 6.5.3). *A presettling cell is required if the sand filter is not preceded by a detention facility.*	StormFilter® (Section 6.5.5)

DRAFT

6.1.3 SENSITIVE LAKE PROTECTION MENU

Where applied: The Sensitive Lake Protection menu is applied to the watersheds of lakes that have been determined to be particularly sensitive to phosphorus and that are being managed to reduce water quality impacts. This menu applies to stormwater conveyed to the lake by surface flow as well as to stormwater infiltrated within one-quarter mile of the lake in soils with high infiltration rates (i.e., measured rate exceeding 9 inches per hour). If stormwater is infiltrated further than one-quarter mile from the lake, or if the project is a ***redevelopment project***, then the Basic WQ menu is applied unless the project is exempt from Core Requirement #8 per Section 1.2.8. For precise details on the application of this and other area-specific water quality menus, refer to Section 1.2.8, "Core Requirement #8: Water Quality."

*Note: The Sensitive Lake Protection menu is a **stand-alone menu**. It integrates the Basic WQ menu level of protection and the additional protection needed to achieve lake protection goals in the options described below. When this menu is required as specified in Core Requirement #8 (see Section 1.2.8), it is intended to replace the Basic WQ menu in the watersheds of sensitive lakes.*

Treatment goal: The Lake Protection menu is designed to achieve a goal of 50 percent total phosphorus (TP) removal for the WQ design flow or volume (defined in Section 6.2.1, p. 6-17), assuming typical forms and concentrations of phosphorus in untreated stormwater runoff.[5]

Basis: The Lake Protection menu will result in removal of more of the TSS load, including more of the finer fraction of TSS, than the Basic menu. The additional increment of solids removal will also provide enough phosphorus removal to meet the TP goal stated above.

DRAFT

❑ LAKE PROTECTION OPTION 1 — LARGE WETPOND

The 50 percent TP removal goal can be satisfied by use of a **large wetpond** or **large combined detention and wetpond** sized so that the wetpond volume is 4.5 times the volume of runoff from the mean annual storm, rather than 3 times the volume as in the basic pond. See Section 6.4.1.1 (p. 6-70) for the large wetpond design, and Section 6.4.4.1 (p. 6-95) for the large combined pond design. *Note: A large wetvault option is not included in this menu since the biological processes thought to remove phosphorus do not take place in underground vaults.*

❑ LAKE PROTECTION OPTION 2 — LARGE SAND FILTER

This option includes use of a **large sand filter, large sand filter vault**, or **large linear sand filter**. Sizing specifications for these facilities can be found in Sections 6.5.2 (p. 6-104), 6.5.3 (p. 6-124), and 6.5.4 (p. 6-130), respectively. *Note: A presettling cell is required if the sand filter is not preceded by a Level 2 or 3 detention facility.*

❑ LAKE PROTECTION OPTION 3 — TWO-FACILITY TREATMENT TRAIN

This option involves use of one of the basic water quality treatment options, listed in Table 6.1.3.A, followed by either a basic sand filter (Section 6.5.2, p. 6-104) or basic sand filter vault (Section 6.5.3, p. 6-124). For dispersed flows, a linear sand filter may be used as the second facility.

[5] Typical TP concentrations in untreated Seattle-area runoff are considered to be between 0.10 and 0.50 mg/L. For projects that are expected to generate higher levels of TP, such as animal husbandry operations, a higher treatment goal may be appropriate.

TABLE 6.1.3.A PAIRED FACILITIES FOR LAKE PROTECTION TREATMENT TRAIN, OPTION 3	
First Basic WQ Facility	**Second WQ Facility**
Biofiltration swale (Sections 6.3.1, 6.3.2, and 6.3.3)	Basic sand filter or sand filter vault (Section 6.5.2 or 6.5.3)
Filter strip (Sections 6.3.4 and 6.3.5)	Linear sand filter (no presettling cell needed) (Section 6.5.4)
Linear sand filter (Section 6.5.4)	Filter strip (Sections 6.3.4 and 6.3.5)
Basic wetpond (Section 6.4.1)	Basic sand filter or sand filter vault (Section 6.5.2 or 6.5.3)
Wetvault (Section 6.4.2)	Basic sand filter or sand filter vault (Section 6.5.1 or 6.5.3)
Stormwater wetland (Section 6.4.3)	Basic sand filter or sand filter vault (Section 6.5.2 or 6.5.3)
Basic combined detention and wetpool facility (Section 6.4.4)	Basic sand filter or sand filter vault (Section 6.5.2 or 6.5.3)

❑ LAKE PROTECTION OPTION 4 — BASIC MENU PLUS PHOSPHORUS CREDIT

DRAFT

This option provides credit to developments that integrate land use and ***site*** design measures to prevent or reduce the levels of phosphorus leaving the ***site***. Credit is also given for the voluntary use of extra levels of onsite detention, since less in-stream erosion is likely to take place with more highly controlled stormwater releases. This reduction in in-stream erosion and bank failure translates directly into control of the phosphorus load delivered to downstream lakes.

The measures for which credit is given are detailed below, along with the point values assigned to each of the actions. Providing any combination of these measures equaling 10 points or more earns this credit. The credit excuses the applicant from the requirement to provide a second water quality facility. *Thus, even though the development is located in the watershed of a sensitive lake, the water quality requirements can be fully met with the provision of a single water quality facility from the Basic Water Quality menu.*

Credit-Earning Actions

Several land use actions and source controls are particularly effective in reducing phosphorus. These actions are not required by this manual or other regulations; they are an alternative to end-of-the-pipe treatment of stormwater. Credit options for phosphorus-reducing actions are described below.

1. **Leaving at least 65 percent of the *site* undisturbed, including undevelopable land.** Full credit, or 10 points, is awarded for leaving 65 percent of a ***site*** in undisturbed native vegetation or allowing native vegetation to re-establish. Critical areas and their buffers may be counted. All areas for phosphorus credit must be in tracts dedicated to the County or protected by covenant (one example of covenant language to protect vegetated tracts from disturbance is shown in Reference section 8-O). A descending scale of points applies where lower percentages of the ***site*** are left undisturbed. **Possible credit = 1 to 10 points.** *Note: In rural residential projects, an exemption from all WQ requirements is possible in certain situations if 65% of the area is set aside in open space. See Core Requirement #8 exemptions in Section 1.2.8.*

2. **Providing extra flow control.** Credit for providing extra flow control applies only in cases where ***site*** runoff travels via stream or open drainage system to the sensitive lake. Voluntary use of the Level 2 flow control standard when the Level 1 standard would be required = 5 points. Voluntary use of the Level 3 flow control standard when the Level 1 standard would be required = 8 points. Voluntary use

of the Level 3 flow control standard when the Level 2 standard would be required = 3 points. **Possible credit = 3 to 8 points.**

3. **Directing runoff from target pollution-generating surfaces to grassy areas with level spreading.** Directing runoff from target pollution-generating areas to grassy areas that are not routinely fertilized or to areas of native vegetation results in pollutant removals similar to those obtained in swales while also providing an increased opportunity for infiltration. To use this option, flows must remain unconcentrated and be spread uniformly over the intended area. (Flow spreader details are given in Section 6.2.6.)

   In general, the vegetated area receiving dispersed flows should be at least 25 percent as large as the area contributing flow. The receiving area should be increased by one percent for each percent increase in slope over four percent. The area should be configured so that the length of the flow path is no longer than the width over which flows are dispersed.

   Example:

   Assume a parking lot is 100' × 600', or 60,000 sf. Flows will be dispersed through an adjacent area of native vegetation with a slope of 8 percent.

   The area of vegetation must be at least 17,400 sf (25% + 4% (for steeper slope) × 60,000 sf). Assuming runoff is dispersed continuously along the wider edge of the parking lot, the flow path would need to be at least 29 feet (17,400' ÷ 600'). If the water were dispersed along the shorter edge, flow path would be 174 feet (17,400' ÷ 100'). However, this flow path would be longer than the width over which flows were dispersed (100'), and would not be a satisfactory option. The parking lot could be graded, however, so that flows would be dispersed at both of the 100 foot ends, making each flow path 87 feet, which would be acceptable.

   Credit is proportional to the total volume of runoff diverted; one point is earned for every 25 percent of total volume so directed. **Possible credit = 1 to 4 points.**

4. **Providing covered parking or covered waste disposal and recycling areas isolated from the stormwater conveyance system.** This item applies to all land uses for which covered parking for employees, residents, guests, and the general public is provided. This can be achieved for commercial land uses simply by covering the parking required by code. For other land uses, provision of additional covered parking for guests or the general public (total parking) in lieu of on-street parking may be used to provide this assurance. It is intended that covered parking would isolate the area from stormwater run-on as well as direct rainfall. A low curb, berm, or enclosing walls, in addition to a roof, would typically be needed.

   The water quality credit is proportional to the percentage of the total surface area that is effectively covered. One point is earned for every 25 percent of parking covered and protected from run-on. One additional point is earned if all solid waste management areas are covered and protected from stormwater run-on. **Possible credit = 1 to 5 points**

5. **Providing covered vehicle washing areas connected to the sanitary sewer system.** This item applies to commercial, industrial, and multifamily ***sites***. Frequent car-washing can contribute significant amounts of phosphorus to stormwater. Note that sewer districts may have pretreatment requirements before allowing connection to the sanitary sewer. **Possible credit = 3 points.**

Table 6.1.3.B (p. 6-11) details the credit options and associated point totals.

Credit may be applied to the whole ***site*** or to a ***natural discharge area*** within the ***site***. It may be advantageous for a developer to concentrate only on a ***natural discharge area*** if the point total for that particular area could equal 10. For example, assume a particular ***natural discharge area*** is one half the total ***site*** area. If 65 percent of the land area in the ***natural discharge area*** will remain undisturbed, that ***natural discharge area*** is eligible for 10 points (see Table 6.1.3.B). The stormwater from that ***natural discharge area*** could be treated with a single water quality facility from the Basic WQ menu; the second facility could be waived. The rest of the ***site*** would still have the two-facility requirement.

DRAFT

Alternatively, if the entire ***site*** were considered, the undisturbed area decreases to 35 percent, eligible for only 3 points. In this case, the developer would need to implement other controls worth 7 points in order to waive the second water quality facility for the entire ***site***.

If the credit option is used, it shall be applied for during initial drainage review by the King County Department of Development and Environmental Services (DDES). The application shall include a **written request for credit** based on either the ***site*** plan or the grading plan for the project, and the ***threshold discharge areas*** shall be delineated on the plans. The request shall outline where the credit would be applied and how the point totals are to be achieved. DDES staff would then evaluate the request and may waive the second water quality treatment requirement for the ***site*** or ***threshold discharge area*** based on point totals outlined in Table 6.1.3.B (below). **Credit is not given unless requested.**

TABLE 6.1.3.B WATER QUALITY CREDIT FOR PHOSPHORUS CONTROL

Credit Option	Points	Credit Option	Points
Leaving site undisturbed, in native vegetation. Buffers without trails may be counted.	At least 65 % = 10 60 % = 9 55 % = 8 50 % = 7 45 % = 6 40 % = 5 35 % = 4 30 % = 3 25 % = 2 20 % = 1	Covered parking protected from run-on	100 % parking = 4 75 % parking = 3 50 % parking = 2 25 % parking = 1
		Covered car wash area connected to sanitary sewer (multifamily)	3
Directing road runoff to pervious, non-pollution-generating vegetated area.	100 % of volume = 4 75 % of volume = 3 50 % of volume = 2 25 % of volume = 1	Covered solid waste storage area	1
		Extra detention with next most restrictive release rate (if discharge to stream)	Level 1→ Level 2 = 5 Level 1→ Level 3 = 8 Level 2→ Level 3 = 3

DRAFT

6.1.4 SPHAGNUM BOG PROTECTION MENU

Where applied: The Sphagnum Bog Protection menu[6] covers sphagnum bog wetlands[7] greater than 0.25 acres in size.[8] It applies to stormwater conveyed by surface flow to the sphagnum bog vegetation community. If stormwater is infiltrated by the project, or if the project is a ***redevelopment project***, then the Basic WQ menu is applied unless the project is exempt from Core Requirement #8, "Water Quality." For precise details on the application of this and other area-specific water quality menus, refer to Section 1.2.8.

Note: The Sphagnum Bog Protection menu is a stand-alone menu. It integrates the Basic WQ menu level of protection and the additional measures needed to achieve bog protection goals in the options described below. When this menu is required as specified in Core Requirement #8 (see Section 1.2.8), it is intended to replace the Basic WQ menu in areas draining to sphagnum bogs.

Treatment goal: If surface water must be discharged to a bog, the treatment goal is to reduce total phosphate by 50 percent, reduce nitrate + nitrite by 40 percent, maintain alkalinity below 10 mg/L, and maintain pH below 6.

Basis: In their undeveloped condition, bogs are isolated from surface water, being supplied almost solely by rainwater. The best strategy for protection of bog water quality is to infiltrate the water quality design volume while routing high flows around the bog. Although it is not known whether alkalinity or nitrogen can be reduced sufficiently by the options outlined below, there are no other technologically-feasible alternatives at this time. An experimental design adjustment (see Section 1.4) could be pursued as additional technology becomes available.

DRAFT

❑ SPHAGNUM BOG PROTECTION OPTION 1 — LARGE WETPOND FOLLOWED BY LARGE SAND FILTER

This option uses a **large wetpond** (see Section 6.4.1, p. 6-69) or a **large combined detention and wetpond** (see Section 6.4.2, p. 6-83), sized so that the wetpond volume is 4.5 times the volume of runoff from the mean annual storm, rather than 3 times the volume as in the Basic Water Quality menu. A large sand filtration facility (see Section 6.5.2, p. 6-104, or 6.5.3, p. 6-124) must follow the pond. In order to ensure that algae and sources of alkalinity from the pond are not washed from the pond into the bog, the **sand filter must be the last facility.**

❑ SPHAGNUM BOG PROTECTION OPTION 2 — STORMWATER WETLAND IN SERIES WITH A LARGE SAND FILTER

This option uses a **stormwater wetland** (see Section 6.4.3, p. 6-89) or **combined detention and stormwater wetland** (see Section 6.4.4, p. 6-95) to remove solids and enhance the concentration of organic acids, and a **large sand filter** (see Section 6.5.2, p. 6-104) to remove the finer sediment for alkalinity and nutrient reduction. **The order of facilities is interchangeable** since there are both advantages and disadvantages to having the sand filter last in the train. *Note: A presettling cell is required if the first treatment facility is not preceded by a detention facility.*

---

[6] The Bog Protection menu targets a different set of pollutants than the Sensitive Lake or Enhanced Basic menus. Since the targeted pollutants are more difficult to remove, use of larger and/or additional treatment facilities is required.

[7] A *sphagnum bog wetland* is defined as a wetland having a predominance of sphagnum moss creating a substrate upon which a distinctive community of acid-loving plants is established (see "Definitions" for more detail). There are several classification schemes for wetlands dominated by sphagnum moss, and a successional series from conventional wetlands to fens to sphagnum bog is recognized by most ecologists. Some biologists use water chemistry and plant community composition to determine where in this successional series a wetland should be placed. In these classification schemes, the sphagnum wetlands defined in this manual would be bogs. Others base the wetland type on the source of water, in which case most King County sphagnum wetlands would be fens. This manual has adopted the classification scheme based on water chemistry and plant communities and hence refers to these wetlands as bogs rather than fens.

[8] The *size* of a sphagnum bog wetland is defined by the boundaries of the sphagnum bog plant community.

❑ SPHAGNUM BOG PROTECTION OPTION 3 — LARGE SAND FILTER IN SERIES WITH A STORMFILTER®

This option uses a **large sand filter** or **large sand filter vault** followed by a **StormFilter®**. Sizing specifications for the large sand filters can be found in Sections 6.5.2 (p. 6-104) and 6.5.3 (p. 6-124). StormFilters® are detailed in Section 6.5.5 (p. 6-135). **The order of facilities is interchangeable** since there are both advantages and disadvantages to having the StormFilter® last in the train. *Note: A presettling cell is required if the first treatment facility is not preceded by a detention facility.*

❑ SPHAGNUM BOG PROTECTION OPTION 4 — THREE-FACILITY TREATMENT TRAIN

This option uses one of the basic water quality treatment options followed by two other facilities. Table 6.1.4.A lists the possible choices of facilities for this option.

TABLE 6.1.4.A
FACILITY COMBINATIONS FOR BOG PROTECTION TREATMENT TRAIN, OPTION 4

First Facility	Second Facility	Third Facility
Biofiltration swale (Sections 6.3.1, 6.3.2 and 6.3.3	StormFilter®* (Section 6.5.5)	Basic sand filter (Sections 6.5.2, 6.5.3 or 6.5.4)
Filter strip (Sections 6.3.4 and 6.3.5)	StormFilter®* (Section 6.5.5)	Basic sand filter (Sections 6.5.2, 6.5.3 or 6.5.4)
Basic wetpond (Section 6.4.1)	Basic sand filter (Sections 6.5.2, 6.5.3 or 6.5.4)	StormFilter®* (Section 6.5.5)
Basic combined detention and wetpool facility (Section 6.4.4)	Basic sand filter (Sections 6.5.2, 6.5.3 or 6.5.4)	StormFilter®* (Section 6.5.5)
Wetvault (Section 6.4.2)	Basic sand filter (Sections 6.5.2, 6.5.3 or 6.5.4)	StormFilter®* (Section 6.5.5)
Stormwater wetland (Section 6.4.3	Basic sand filter (Sections 6.5.2, 6.5.3 or 6.5.4)	StormFilter®* (Section 6.5.5)

** Note that the order of the second and third facilities may be interchanged. Other treatment options may be pursued through an experimental design adjustment per Section 1.4.*

DRAFT

6.1.5 HIGH-USE MENU

Where applied: The High-Use menu is applied to all new development and ***redevelopment projects*** that have ***high-use site*** characteristics, as defined in Chapter 1 (see "Special Requirement # 5, Oil Control"). Oil control devices are to be placed upstream of other facilities, as close to the source of oil generation as practical.

Note: Where this menu is applicable, it is in addition to the area-specific WQ menus.

Treatment goal: Oil control options given in the High-Use menu are designed to meet the goals of no visible sheen or less than 10 mg/L total petroleum hydrocarbons (TPH) leaving the ***site***.

❑ OIL CONTROL OPTION 1 — CATCH BASIN INSERT

Catch basin inserts (see Section 6.6.1, p. 6-139) may be used to meet the oil control requirements for new or redeveloped ***high-use sites***. For new development, the criteria for flow capture given in "Design Criteria" (p. 6-141) must be met. The flow capture criteria apply to the high-use area only, provided that flows not subject to high use are shunted around the insert. For redevelopment ***sites***, additional flow may be routed through the insert if it is not possible for the ***site*** to meet the flow capture criteria without installing new catch basins. Up to 40 percent additional flow may be directed to the insert in these cases.

All catch basin inserts must be fitted with oil sorbent media, to be changed at least monthly in wet weather (generally October through May) and whenever the surface of the media is covered with sediment. Acceptable sorbent media include wood fiber products, such as *Absorbent W* or *SuperSorb*; whole, green fibrous moss such as that supplied by floral shops (must not be ground peat moss); or polymers such as *Petrolok* and *Streamguard*™. These media have been investigated and found to retain captured oil fairly effectively. Cedar Grove compost was tested and found unacceptable for oil retention. Stormwater Management's patented CFS® mix was also tested, and although it performed fairly well, it did not retain oil as well as the other products tested. Therefore, the CFS® shall not be used in catch basin inserts for oil control.

Alternative media may be used if it can be shown they are substantially equivalent to the media listed above. The method that should be used to demonstrate oil retention is given in the decision paper entitled "Oil leachate tests for various adsorbent filter media," May 1994, King County Surface Water Management Division (now Water and Land Resources Division).

DRAFT

❑ OIL CONTROL OPTION 2 — BAFFLE OIL/WATER SEPARATOR

Baffle oil/water separators (see Section 6.6.2, p. 6-145) may be used to treat stormwater runoff from high-use developments and facilities that produce relatively high concentrations of oil and grease. Baffle separators historically have been effective in removing oil having droplet sizes of 150 microns or larger. If sized properly, they can achieve effluent concentrations as low as 10 to 15 mg/L.

❑ OIL CONTROL OPTION 3 — COALESCING PLATE OIL/WATER SEPARATOR

Coalescing plate separators (see Section 6.6.2, p. 6-145) may be used to treat stormwater runoff from high-use developments and facilities that can produce relatively high concentrations of oil and grease. Current technology and design of coalescing plate separators achieve effluent concentrations as low as 10 mg/L with removal of oil droplet sizes as small as 20 to 60 microns.

❑ OIL CONTROL OPTION 4 — LINEAR SAND FILTER

The linear sand filter (see Section 6.5.4, p. 6-130) is used in the Core Requirement #8 water quality menus (i.e., the Basic, Enhanced Basic, Sensitive Lake, and Sphagnum Bog menus), as well as for oil control in the High-Use menu (Special Requirement #5). However, if used to satisfy Core Requirement #8, the same facility shall not also be used to satisfy the oil control requirement (Special Requirement #5) unless

enhanced maintenance is assured. This is to prevent clogging of the filter by oil so that it will function for TSS or TP removal as well. Quarterly cleaning is required unless specified otherwise by the designer.

❑ OIL CONTROL OPTION 5 — WETVAULT WITH BAFFLE

A wetvault may be modified to fulfill requirements for oil control provided the following are true:

1. The criteria given at the end of Section 6.4.2.2 for modification of wetvaults for use as a baffle oil/water separators shall be met, and
2. Assurance is provided that the maintenance frequency and oil removal frequency for baffle oil/water separators will be followed (see Section 6.6.2, p. 6-145).

~~❑ OIL CONTROL OPTION 6 — PARKING LOT WASHING WITH PROPER WASH WATER DISPOSAL~~

~~Quarterly washing of a parking lot may be used instead of a structural oil control measure if proper disposal of the wash water is arranged. Proper disposal may include holding the water in a blind sump with subsequent hauling offsite, or discharge to the sanitary sewer or septic system after holding the water for 24 hours and skimming off the oil for recycling. If wash water is discharged to a sanitary sewer or septic tank, detergents or emulsifiers should be avoided so that subsequent separation and removal of the oil can take place in a reasonable time frame. A waste discharge permit, issued by the King County Department of Natural Resources and Parks, Industrial Waste Section, may be needed to discharge wash water to the sanitary sewer.~~

❑ OIL CONTROL OPTION ~~7~~6 — COMPLIANCE WITH OTHER AGENCY REQUIREMENTS

If the ***site*** has a National Pollutant Discharge Elimination System (NPDES) industrial stormwater permit that specifically addresses oil control for the target ***pollution-generating impervious surface*** of the ***site***, compliance with NPDES permit conditions ~~is~~may be adequate to comply with the oil control requirements of Special Requirement #5. Copies of the ***site's*** NPDES permit requirement and the best management practices specifically addressing oil control shall be submitted to determine adequacy.

If the area under the covered fueling island drains to the sanitary sewer, then only the remaining high-use area actually draining to the storm drainage system (normally ingress and egress routes) need comply with the High-Use menu.

Note: Covered fueling islands draining to the sanitary sewer or a dead-end sump are recommended in the Department of Ecology's Stormwater Management Manual for the Puget Sound Basin, Section IV 4.1 and required by the King County Industrial Waste Section for new construction.

DRAFT

DRAFT

6.2 GENERAL REQUIREMENTS FOR WQ FACILITIES

This section presents general requirements and other information applicable to the design of water quality (WQ) facilities. Topics covered include the following:

- "Water Quality Design Flows," Section 6.2.1
- "Sequence of Facilities," Section 6.2.2 (p. 6-19)
- "Setbacks, Slopes, and Embankments," Section 6.2.3 (p. 6-21)
- "Facility Liners," Section 6.2.4 (p. 6-23)
- "Flow Splitter Designs," Section 6.2.5 (p. 6-29)
- "Flow Spreading Options," Section 6.2.6 (p. 6-33).

When detail in the WQ designs is lacking, refer to Chapter 5 for guidance. In cases where requirements are extremely costly, a less expensive alternative that is functionally equivalent in terms of performance, environmental effects, health and safety, and maintenance may be sought through the adjustment process (see Section 1.4).

Emerging Technologies

New emerging technologies may be reviewed through an Experimental Design Adjustment per Section 1.4 ~~or through the Washington Department of Ecology Stormwater Treatment Technical Review Committee~~. In addition, any new treatment technologies must be approved through the state Department of Ecology's *TAPE program*[9] before the technology can be approved by King County. Once a treatment technology has been shown to meet pollutant removal goals, King County may allow use of the technology through a blanket adjustment per Section 1.4. New technologies may be limited to use only on projects that will be privately owned and maintained. The blanket adjustment will specify the design criteria.

DRAFT

Use of Metal Materials

Galvanized metals leach zinc into the environment, especially in standing water situations. High zinc concentrations, sometimes in the range that can be toxic to aquatic life, have been observed in the region.[10] Therefore, use of galvanized materials in stormwater facilities and conveyance systems is discouraged. Where other metals, such as aluminum or stainless steel, or plastics are available, they shall be used.

6.2.1 WATER QUALITY DESIGN FLOWS

Water Quality Design Flow

The water quality design flow is defined as follows:

- *Preceding detention*: **60% of the developed two-year peak flow rate, as determined using the KCRTS model** with 15-minute time steps calibrated to ***site*** conditions (see Chapter 3). ~~*Note: if KCRTS is not being used on a project, the WQ design flow may also be estimated using 64% of the 2-year 24-hour precipitation in the SBUH model.*~~[11]

[9] *TAPE* stands for Technology Assessment Protocol – Ecology. For more information, see Ecology's website at http://www.ecy.wa.gov/programs/wq/stormwater/newtech/index.html.

[10] Finlayson, 1990. Unpublished data from reconnaissance of Metro Park and Ride lot stormwater characteristics.

~~[11] The Department of Ecology WQ design flow is based on the flow predicted by the SBUH model for 64% of the 2-year 24-hour precipitation. This is roughly equivalent to the WQ design flows given here for the KCRTS model.~~

- *Downstream of detention*: The full **2-year release rate from the detention facility**.

The KCRTS model will typically be used to compute the WQ design flow. When examining the peak flow rates associated with various runoff volumes, it was found that detained flows and undetained flows must be described differently. However, unlike peak flows, the KCRTS model computation of volume of runoff is unaffected by whether or not the runoff is detained. Therefore, facilities such as wetponds, which are sized by a simple volume-based approach that does not route flows through a detention facility, are the same size whether they precede or follow detention.

Note that facilities which are sized based on volume and which include routing of flows through a detention facility, such as the detailed sand filter method, are significantly smaller when located downstream of detention, even though the same volume of water is treated in either situation. This is because the detention facility routing sequence stores peaks within the pond and releases them at a slow rate, reducing the size of the sand filter pond subsequently needed (the volume needed to store the peaks need not be provided again in the sand filter pond).

Flow Volume to be Treated

When water quality treatment is required pursuant to the core and special requirements of this manual, it is intended that a minimum of **95% of the annual average runoff volume** in the (8 year) time series, as determined with the KCRTS model, be treated. Designs using the WQ design flow (as discussed above) will treat this minimum volume.

Treatable Flows

DRAFT

As stated in Chapter 1, only runoff from target pollution-generating surfaces must be treated using the water quality facility options indicated in the applicable water quality menu. These surfaces include both ***pollution-generating impervious surface*** and ***pollution-generating pervious surface***. "Target" means that portion from which runoff must be treated using a water quality facility as specified in Chapter 1. ***Pollution-generating impervious surfaces*** are those impervious surfaces which are subject to vehicular use or storage of erodible or leachable materials, wastes, or chemicals; and which receive direct rainfall or the run-on or blow-in of rainfall. For subdivisions, target ***pollution-generating impervious surfaces*** typically include right-of-way improvements (roads), parking areas and driveways that are not ***fully dispersed*** as specified in Section 1.2.3.2. Metal roofs are also considered to be ***pollution-generating impervious surface*** unless they are treated to prevent leaching. ***Pollution-generating pervious surfaces*** are those non-impervious surfaces subject to use of pesticides and fertilizers, loss of soil, or the use or storage of erodible or leachable materials, wastes, or chemicals. For subdivisions, target ***pollution-generating pervious surfaces*** typically include lawns and landscaped areas that are not ***fully dispersed*** and from which there will not be a concentrated surface discharge in a natural channel or man-made conveyance system from the ***site***.

The following points summarize which ***site*** flows must be treated and under what circumstances:

- All runoff from target ***pollution-generating impervious surfaces*** is to be treated through the water quality facility or facilities required in Chapter 1 and specified in the Chapter 6 menus.
- Runoff from lawns and landscaped areas generally overflows toward street drainage systems where it is conveyed to treatment facilities along with the road runoff. However, sometimes runoff from backyards drains into open space or buffer areas. In these cases, buffers may be used to provide the requisite water quality treatment provided (1) runoff sheet flows into the buffer or a dispersal trench is provided to disperse flows broadly into the buffer, and (2) the flow path through the pollution-generating area is limited to about 200 feet.
- Drainage from impervious surfaces that are **not pollution-generating** (such as most roofs) or are **not target pollution-generating surfaces** may bypass the treatment facility.[12] Roof runoff is, however,

[12] Available data on the quality of roof runoff was examined. Although there are instances of polluted roof runoff, they tend to be related to galvanized roofing materials or industrial processes. There is also data that suggests the pollutant concentration of

still subject to flow control per Core Requirement #3. Note that **metal roofs** are considered pollution-generating unless they are treated to prevent leaching.

- Drainage from areas in native vegetation should not be mixed with untreated runoff from streets and driveways, if possible. It is best to infiltrate or disperse this relatively clean runoff to maximize recharge to shallow groundwater, wetlands, and streams.
- If runoff from roofs or areas in native vegetation reaches a water quality facility, flows from those areas must be included in the sizing calculations for the facility. Once runoff from non-pollution-generating areas and non-target pollution-generating areas is combined with runoff from target pollution-generating areas, it cannot be separated before treatment.

6.2.2 SEQUENCE OF FACILITIES

As specified in the water quality menus, where more than one water quality facility is used, the order is often prescribed. This is because the specific pollutant removal role of the second or third facility in a treatment train often assumes that significant solids settling has already occurred. For example, phosphorus removal using a two-facility treatment train relies on the second facility (sand filter) to remove a finer fraction of solids than those removed by the first facility.

There is a larger question, however, of whether water quality facilities should be placed upstream or downstream of detention facilities. In general, all water quality facilities may be installed upstream of detention facilities, although presettling basins are needed for sand filters and infiltration basins. Not all water quality facilities, however, can be located downstream of detention facilities. Those facilities that treat unconcentrated flows, such as filter strips and narrow-area biofilters, will seldom be practical downstream of detention facilities. Other facilities present special problems that must be considered before placement downstream is advisable.

DRAFT

Two facilities that fall into this latter category are the basic biofiltration swale (see Section 6.3.1, p. 6-39) and the sand filter or sand filter vault (see Sections 6.5.2 or 6.5.3). For both of these facilities, the prolonged low flows resulting from Level 2 or 3 flow control may interfere with facility operation. In the case of basic biofilters, prolonged flows, generally in excess of about two weeks, will cause the grass to die. This can be dealt with by using the wet biofilter design.

In the case of sand filters, prolonged flows may result in the sand being saturated for long periods. Saturated sand can become anoxic (lose all oxygen) when dissolved oxygen in the pore water becomes depleted. If the sand layer becomes anoxic, some forms of phosphorus can become soluble and be released, negating the positive P removals achieved earlier. To prevent long periods of sand saturation, adjustments may be necessary after the sand filter is in operation to bypass some areas of the filter, allowing them to drain completely. If saturated conditions are present after facility operation, adjustments to the design shall be required. It may also be possible to employ a different alternative that uses facilities less sensitive to prolonged flows. Table 6.2.2.A summarizes placement considerations of water quality facilities in relation to detention.

Oil control facilities must be located upstream of water quality facilities and as close to the source of oil-generating activity as possible. They should also be located upstream of detention facilities, if possible.

atmospheric fallout decreases with vertical elevation. See "Water Quality Thresholds Decision Paper," April 1994, King County Surface Water Management Division (now Water and Land Resources Division).

TABLE 6.2.2.A WATER QUALITY FACILITY PLACEMENT IN RELATION TO DETENTION		
Water Quality Facility	**Preceding Detention**	**Following Detention**
Basic biofiltration swale (Section 6.3.1)	OK	OK if downstream of Level 1 detention. However, prolonged flows may cause soil saturation and injure grass. If downstream of a Level 2 or 3 flow control pond, the wet biofiltration swale may be needed. (See Section 6.3.2.)
Wet biofiltration swale (Section 6.3.2)	OK	OK
Continuous inflow biofiltration swale (Section 6.3.3)	OK	No—must be installed before flows concentrate.
Filter strip or roadway filter strip (Sections 6.3.4 and 6.3.5)	OK	No—must be installed before flows concentrate.
Basic or large wetpond (Section 6.4.1)	OK	OK—less water level fluctuation in ponds downstream of detention may improve aesthetic qualities.
Basic or large combined detention and wetpond (Section 6.4.4)	Not applicable	Not applicable
Wetvault (Section 6.4.2)	OK	OK
Basic or large sand filter or sand filter vault (Section 6.5.2 or 6.5.3)	OK, but presettling and control of floatables needed	OK—sand filters downstream of a Level 2 or 3 flow control pond may require field adjustments if prolonged flows cause sand saturation and interfere with the phosphorus removal mechanism.
Stormwater wetland/pond (Section 6.4.3)	OK	OK—less water level fluctuation and better plant diversity are possible if the stormwater wetland is located downstream of the detention facility.

DRAFT

6.2.3 SETBACKS, SLOPES, AND EMBANKMENTS

This section presents the general requirements for water quality facility setbacks, side slopes, fencing, and embankments.

When locating water quality facilities near wetlands and streams, there is a potential that the water level may be lowered. Care in the design and siting of the facility or conveyance elements associated with the facility is needed to assure this impact is avoided. Sufficient setback of the facility from the water body is one method to prevent impact.

❑ SETBACKS FROM TRACT LINE

Water quality facilities that are maintained by the County must be in tracts dedicated to the County. Different water quality facilities and different types of side slopes (bermed vs. cut) have somewhat different requirements for setback from the tract line or setbacks for structures on adjacent tracts; these various requirements are given in Table 6.2.3.A (p. 6-22).

Most setbacks from tract lines are for maintenance equipment maneuverability. Setback requirements do not apply to water quality facilities that are privately maintained, but adequate room for maintenance equipment shall be considered during ***site*** design. Restrictions on the placement of structures on adjacent internal lots, as specified for infiltration facilities in Sections 5.4.2, 5.4.3, and 5.4.4, do however apply to privately maintained facilities.

❑ SIDE SLOPES, FENCING, AND EMBANKMENTS

DRAFT

Side slopes for water quality facilities should not exceed a slope of 3H:1V. Moderately undulating slopes are acceptable and can provide a more natural setting for the facility. In general, gentle side slopes improve the aesthetic attributes of the facility and enhance safety.

Water quality facilities must meet the following requirements for side slopes, fencing, and embankments:

1. If the water quality facility (wetpond, sand filter, or stormwater wetland) will hold standing water deeper than 2 feet, **fencing is required** for interior slopes steeper than 3H:1V. If only sections of the slope are steeper than 3:1, barrier shrubs, such as barberry, may be used rather than fencing for sections shorter than 20 feet. Planting climbing vines at the base of a fence can enhance its aesthetic qualities.
2. If required, fencing shall be placed **at or above the overflow water surface**. Side slope and attendant fencing requirements are not applicable to slopes **above** the overflow water surface. The specific fencing requirements given in Chapter 5 (see Section 5.3) also apply to WQ facilities.
3. If facilities are **privately owned and maintained**, the fencing requirements of this manual are recommended rather than required. However, the ***site*** must still comply with any fencing requirements in other codes or regulations.
4. For facilities owned and maintained by the County, at least **25 percent of the facility perimeter** shall have interior sides no steeper than 3H:1V, even if fenced, to minimize safety risks. Access to the side slopes shall be provided for maintenance. For private facilities, the same is recommended rather than required.
5. Interior side slopes may be **retaining walls**, provided that the design is prepared and stamped by a ***civil engineer***. A fence shall be provided along the top of the wall.
6. Exterior side slopes shall not be **steeper than 2H:1V** unless confirmed stable by a geotechnical engineer.
7. Water quality facilities with embankments that impound water must comply with Washington State **dam safety regulations** (WAC 173-175). Under current regulations (as of January 1996), if the

impoundment has a storage capacity (including both water and sediment storage volumes) greater than 10 acre-feet above natural ground level and a dam height of more than 6 feet, then dam safety design and review are required by the Washington Department of Ecology (Ecology). If the storage capacity is less than 10 acre-feet above natural ground level, then the facility is exempt from Ecology review. If the dam height is less than 6 feet but capacity is greater than 10 acre-feet, then Ecology reviews on a case-by-case-basis to determine the hazard potential downstream in the event of a failure.

Intent: The requirements for slopes and fencing are intended to accomplish the following objectives:

- To prevent persons from inadvertently slipping into the pond, either by providing gentle interior side slopes (3H:1V or gentler) or by fencing or other barrier
- To allow easy egress from the pond (gentle side slopes, safety benches, etc.) when access is not restricted by a fence or other barrier
- To ensure interior and exterior slopes or embankments are stable and will not create a hazardous or damaging situation.

TABLE 6.2.3.A SETBACK REQUIREMENTS *

WQ FACILITY	SETBACK FROM TRACT LINE		
	At Grade or Underground	**If Facility Slope is Cut into Grade**	**If Slope is an Embankment**
Biofiltration swale	N/A	See conveyance system requirements (Section 4.1)	5 feet from toe of exterior slope
Filter strip	5 feet from toe	5 feet from toe	N/A
Wetpond	N/A	5 feet from emergency overflow water surface (WS)	5 feet from toe of exterior slope
Combined detention and wetpond	N/A	5 feet from emergency overflow WS	5 feet from toe of exterior slope
Wetvault or sand filter vault	5 feet from property line	N/A	N/A
Sand filter ponding area	N/A	5 feet from emergency overflow WS	5 feet from toe of exterior slope
Linear sand filter	5 feet from property line	N/A	N/A
StormFilter® ponding area	5 feet from property line	5 feet from emergency overflow WS	5 feet from toe of exterior slope

* Greater setback distances are required whenever expressly stated or referenced in this manual or when required by other County codes or other agencies. Steep slopes, land slide areas, open water features, springs, wells, and septic tank drainfields are features that often have additional setback requirements. Some typical setback distances imposed by the Seattle-King County Department of Public Health include the following:

- Open water features: 100 feet
- Wells: 100 feet
- Springs used for potable water: 200 feet
- Septic tank drainfields: 100 feet for open ponds. Wetvaults or tanks are usually considered watertight and often have no specific setback requirements. However, tanks or vaults must not be located so that they could impede downgradient subsurface effluent flows.

DRAFT

6.2.4 FACILITY LINERS

Water quality facilities in which water is in direct contact with the soil must be lined with either a **low permeability liner** or a **treatment liner** when the soil does not have properties which reduce the risk of groundwater contamination from stormwater runoff that may infiltrate in the facility. Such properties are defined and determined as specified in the "Groundwater Protection" requirements for infiltration facilities in Section 5.4.1. In short, a liner is required if the soil has an *infiltration rate*[13] greater than 9 inches per hour (0.15 inches per minute) and does not meet any of the other soil property criteria required for groundwater protection in Section 5.4.1. In areas designated as ***groundwater protection areas***, this liner requirement applies when the soil infiltration rate exceeds 2.4 inches per hour (0.04 inches per minute) and the other soil property criteria for ***groundwater protection areas*** are not met. If detention ponds are used in soils with infiltration rates above the specified rates, either water quality treatment facilities must precede the detention pond, or the detention pond must also be lined.

In addition to groundwater protection considerations, some facility types require permanent water for proper functioning. An example is the first cell of a wetpond.

Low permeability liners reduce infiltration to a very slow rate, generally less than 0.02 inches per hour (1.4×10^{-5} cm/s). Low permeability liners may be fashioned from compacted till, clay, geomembrane, or concrete as detailed in Section 6.2.4.1 (p. 6-26). Till liners are preferred because of their general resilience and ease of maintenance.

Treatment liners amend the soil with materials that treat stormwater before it reaches more freely draining soils. They have slow rates of infiltration, generally less than 2.4 inches per hour (1.7×10^{3} cm/s), but not as slow as low permeability liners. Treatment liners may use in-place native soils or imported soils. Options for this type of liner include a fine sand layer or a soil layer which has high organic content; see Section 6.2.4.2 (p. 6-27) for more option details.

Intent: In soils with high rates of infiltration, the potential exists for the transfer of pollutants from stormwater to groundwater before treatment in water quality facilities occurs. Liners are intended to reduce the likelihood that pollutants in stormwater will reach the groundwater when WQ treatment facilities are constructed in soils with high infiltration rates. A more conservative infiltration rate is used as the lining threshold for WQ facilities in ***groundwater protection areas***. This is because the potential consequences of pollutant transfer are more serious in these areas.

DRAFT

General Design Criteria

1. Table 6.2.4.A (p. 6-25) identifies the type of liner for use with various water quality treatment facilities. If a facility requires a liner, a **treatment liner** shall be provided, except where a low permeability liner is noted in Table 6.2.4.A.
2. Liners shall be evenly placed over the bottom and/or sides of the treatment area of the facility as indicated in Table 6.2.4.A. Areas above the treatment volume that are required to pass flows greater than the water quality treatment flow (or volume) need not be lined. However, the lining must be extended to the top of the interior side slope and anchored if it cannot be permanently secured by other means.
3. For **low permeability liners**, the following criteria apply**:**
   a) Where the seasonal high groundwater elevation is likely to contact a low permeability liner, liner buoyancy may be a concern. A low permeability liner shall not be used in this situation unless evaluated and recommended by a geotechnical engineer.

[13] Infiltration rates can either be measured in the field using methods given in Chapter 5 or inferred from the USDA soil textural triangle (shown in Section 5.4.1). If inferred, the measured infiltration rate is assumed less than 9 inches per hour for all soil texture classes except sand and loamy sand.

b) Where grass must be planted over a low permeability liner per the facility design, a minimum of 6 inches of good topsoil or compost-amended native soil (2 inches compost tilled into 6 inches of native soil) must be placed over the liner in the area to be planted. Twelve inches is preferred.

c) If an **identification sign** is required for the facility (see detention pond requirements in Section 5.3.1), the face of the sign shall bear a note indicating the facility is lined to protect water quality. In addition, the back of the sign shall include information indicating which facilities are lined, the extent of lining, the liner material used, the liner thickness (if clay or till), and the type and distance of the marker above the liner (if a geomembrane). This information need only be readable by someone standing at arms-length from the sign.

4. If a **treatment liner** will be below the seasonal high water level, the pollutant removal performance of the liner must be evaluated by a geotechnical or groundwater specialist and found to be as protective as if the liner were above the level of the groundwater.

See Sections 6.2.4.1 and 6.2.4.2 for more specific design criteria on the various options for low permeability liners and treatment liners.

DRAFT

TABLE 6.2.4.A LINING TYPES FOR WQ FACILITIES		
WQ Facility	**Area to be Lined**	**Type of Liner**
Basic biofiltration swale	Bottom and sides	Treatment liner
Wet biofiltration swale	Bottom and sides	Low permeability liner (If the swale will intercept the seasonal high groundwater table, a treatment liner is recommended.)
Continuous inflow biofiltration swale	Bottom and sides	Treatment liner
Filter strip, narrow-area filter strip	Bottom	Treatment liner
Wetpond	**First cell**: bottom and sides to WQ design water surface **Second cell**: bottom and sides to WQ design water surface **Single cell** (4L:1W or greater): bottom and sides to WQ design water surface	Low permeability liner (If the cell will intercept the seasonal high groundwater table, a treatment liner is recommended.) Treatment liner Low permeability liner
Combined detention/WQ facility	**First cell**: bottom and sides to WQ design water surface **Second cell**: bottom and sides to WQ design water surface **Single cell** (4L:1W or greater): bottom and sides to WQ design water surface	Low permeability liner (If the cell will intercept the seasonal high groundwater table, a treatment liner is recommended.) Treatment liner Low permeability liner
Wet vault	Not applicable	No liner needed
Stormwater wetland	Bottom and sides, both cells	Low permeability liner (If the facility will intercept the seasonal high groundwater table, a treatment liner is recommended.)
Sand filter	Pond sides only	Treatment liner
Sand filter vault	Not applicable	No liner needed
Linear sand filter	Not applicable if in vault Bottom and sides of presettling cell if not in vault	No liner needed Low permeability or treatment liner
StormFilter® (in vault)	Not applicable	No liner needed

DRAFT

6.2.4.1 DESIGN CRITERIA FOR LOW PERMEABILITY LINER OPTIONS

This section presents the design criteria for each of the following four low permeability liner options:

- Compacted till liners
- Clay liners
- Geomembrane liners
- Concrete liners.

❑ COMPACTED TILL LINERS

1. Liner thickness shall be 18 inches after compaction.
2. Soil shall be compacted to 95% minimum dry density, modified proctor method (ASTM D-1557).
3. A different depth and density sufficient to retard the infiltration rate to 2.4 x 10^{-5} inches per minute (1 x 10^{-6} cm/s) may also be used in lieu of Criteria 1 and 2.
4. Soil should be placed in 6 inch lifts.
5. Soils may be used that meet the following gradation:

Sieve Size	Percent Passing
6 inch	100
4 inch	90
#4	70 - 100
#200	20 - 100

DRAFT

❑ CLAY LINERS

1. Liner thickness shall be 12 inches.
2. Clay shall be compacted to 95% minimum dry density, modified proctor method (ASTM D-1557).
3. A different depth and density sufficient to retard the infiltration rate to 2.4 x 10^{-5} inches per minute (1 x 10^{-6} cm/s) may also be used in lieu of Criteria 1 and 2.
4. The slope of clay liners must be restricted to 3H:1V for all areas requiring soil cover; otherwise, the soil layer must be stabilized by another method so that soil slippage into the facility does not occur. Any alternative soil stabilization method must take maintenance access into consideration.
5. Where clay liners form the sides of ponds maintained by the County, the interior side slope must not be steeper than 3:1, irrespective of fencing. This restriction is to ensure that anyone falling into the pond may safely climb out. The same criterion is recommended for privately owned and maintained ponds.

❑ GEOMEMBRANE LINERS

1. Geomembrane liners shall be UV resistant and have a minimum thickness of 30 mils. A thickness of 40 mils shall be used in areas of maintenance access or where heavy machinery must be operated over the membrane.
2. Geomembranes shall be bedded according to the manufacturer's recommendations.

3. Liners shall be installed so that they can be covered with 12 inches of top dressing forming the bottom and sides of the water quality facility.[14] Top dressing shall consist of 6 inches of crushed rock covered with 6 inches of native soil. The rock layer is to mark the location of the liner for future maintenance operations. As an alternative to crushed rock, 12 inches of native soil may be used if orange plastic "safety fencing" or another highly-visible, continuous marker is embedded 6 inches above the membrane.
4. If possible, liners should be of a contrasting color so that maintenance workers are aware of any areas where a liner may have become exposed when maintaining the facility.
5. Geomembrane liners shall not be used on slopes steeper than 5H:1V to prevent the top dressing material from slipping. Textured liners may be used on slopes up to 3H:1V upon recommendation by a geotechnical engineer or engineering geologist that the top dressing will be stable for all ***site*** conditions, including maintenance.

❑ CONCRETE LINERS

1. Portland cement liners are allowed irrespective of facility size, and shotcrete may be used on slopes. However, specifications must be developed by an engineer who certifies the liner against cracking or losing water retention ability under expected conditions of operation, including facility maintenance operations. Weight of maintenance equipment can be up to 80,000 pounds when fully loaded.
2. Asphalt concrete may not be used for liners due to its permeability to many organic pollutants.
3. If grass is to grown over a concrete liner, slopes must be no steeper than 5H:1V to prevent the top dressing material from slipping.

DRAFT

6.2.4.2 DESIGN CRITERIA FOR TREATMENT LINER OPTIONS

This section presents the design criteria for each of the following two treatment liner options:

- Sand layer
- Organic layer.

❑ SAND LAYER

1. A one-foot thick layer of sand may be used as a treatment layer beneath a water quality or detention facility if it is equivalent or finer than one of the following:
   a) The sand filter specification given in Table 6.5.2.C (p. 6-113)
   b) One of the following specifications:

Sieve Size	**Option 1** Minimum Percent Passing	**Option 2** Minimum Percent Passing
#4	75	75
#40	25	50
#200	5	2

2. Certification shall be provided to the DDES inspector that the sand meets one of the above criteria. Such certification may be provided by the sand supplier or by a soils testing laboratory.
3. In-place soils may be substituted for sand if they meet one of the above criteria as demonstrated by testing one soil sample per 1,000 square feet of facility area. Each sample shall be a composite of subsamples taken throughout the depth of the treatment layer.

[14] An exception is the linear sand filter which does not require a soil top dressing to the liner.

❑ ORGANIC SOIL LAYER

1. A one-foot thick layer of soil with a minimum organic content of 1% AND a minimum cation exchange capacity (CEC) of 5 milliequivalents/100 grams may be used as a treatment layer beneath a water quality or detention facility.

   If a thicker layer of treatment soil is available, the organic content and CEC requirements can be reduced by $^1/_2$ unit for each additional foot of soil thickness provided.

   Example

   If the treatment liner will be 3 feet thick, 2 feet more than the required 1 foot, the organic content may be reduced by $^1/_2$ x 2 = 1 unit. The organic content could then be 4%, and the CEC requirement could be 4 milliequivalents/100 grams and still meet the groundwater protection criteria.

2. **Organic content** shall be measured on a dry weight basis using ASTM D2974.
3. **Cation exchange capacity** (CEC) shall be tested using EPA laboratory method 9081.
4. **Certification** by a soils testing laboratory that imported soil meets the organic content and CEC criteria above shall be provided to the DDES inspector.
5. **Animal manures** used in treatment soil layers must be sterilized because of potential for bacterial contamination of the groundwater.
6. To demonstrate that in-place soils meet Requirement 1 above, one **sample** per 1,000 square feet of facility area shall be tested. Each sample shall be a composite of subsamples taken throughout the depth of the treatment layer (usually two to six feet below the expected facility invert).
7. If a reduction in the organic content and CEC criteria is sought because the treatment layer is thicker than 2 feet, soil tests must represent the entire treatment layer.

DRAFT

6.2.5 FLOW SPLITTER DESIGNS

Most water quality facilities may be designed as **flow-through, or on-line, systems** with flows above the water quality design flow or volume simply passing through the facility untreated. However, it is sometimes desirable to restrict flows to water quality treatment facilities and bypass the remaining higher flows around them **(off-line facilities)**. This can be accomplished by **splitting flows** in excess of the water quality design flow upstream of the facility and diverting higher flows to a bypass pipe or channel. The bypass typically enters a detention facility or the downstream receiving drainage system, depending on flow control requirements. In most cases, it is a designer's choice whether WQ facilities are designed as on-line or off-line; an exception is oil/water separators, which must be designed off-line.

A crucial factor in designing flow splitters is to ensure that low flows are delivered to the treatment facility up to the **WQ design flow rate**. Above this rate, additional flows are diverted to the bypass system with minimal increase in head at the flow splitter structure to avoid surcharging the water quality facility under high flow conditions.

Flow splitters are typically catch basins or vaults with concrete baffles. In place of baffles, the splitter mechanism may be a half tee section with a solid top and an orifice in the bottom of the tee section. A full tee option may also be used (see "Design Criteria" below). Two possible design options for flow splitters are shown in Figure 6.2.5.A and Figure 6.2.5.B. Other equivalent designs that achieve the result of splitting low flows, up to the WQ design flow, into the WQ treatment facility and divert higher flows around the facility are also acceptable.

6.2.5.1 METHODS OF ANALYSIS

Flow splitters may be modeled using the two outlet reservoir routine as described in Section 3.2.4, Storage Routing. The stage/discharge relationship of the outflow pipes should be determined using the backwater analysis techniques in Chapter 5. The orifice shall be sized per Section 5.3.4.2. Weirs should be analyzed as sharp-crested weirs.

DRAFT

6.2.5.2 DESIGN CRITERIA

General

1. A flow splitter shall be designed to deliver the required **water quality design flow rate** specified in Section 6.2.1 (p. 6-17) to the WQ treatment facility. For the basic size sand filter, which is sized based on volume, use the WQ design flow rate to design the splitter. For the large sand filter, use the 2-year flow rate.
2. The **top of the weir** shall be located at the water surface for the design flow. Remaining flows enter the bypass line. Flows modeled using the KCRTS program shall use 15-minute time steps.
3. The **maximum head** shall be minimized for flow in excess of the water quality design flow. Specifically, flow to the WQ facility at the 100-year water surface shall not increase the design WQ flow by more than 10%.
4. Either design shown in Figure 6.2.5.A (p. 6-31) or Figure 6.2.5.B (p. 6-32) shall be used. Equivalent designs are also acceptable.
5. Special applications, such as roads, may require the use of a **modified flow splitter**. The baffle wall may be fitted with a notch and adjustable weir plate to proportion runoff volumes other than high flows.
6. For ponding facilities, backwater effects must be included in designing the height of the standpipe in the catch basin.

7. Ladder or step and handhold access (per King County Road standards) shall be provided. If the weir wall is higher than 36 inches, two ladders, one to either side of the wall, are required.

Material Requirements

1. The **splitter baffle** shall be installed in a Type 2 catch basin or vault.
2. The **baffle wall** shall be made of reinforced concrete or another suitable material resistant to corrosion, and have a minimum 4-inch thickness. The minimum clearance between the top of the baffle wall and the bottom of the catch basin cover shall be 4 feet; otherwise, dual access points shall be provided.
3. All **metal parts** shall be corrosion resistant. Examples of preferred materials include aluminum, stainless steel, and plastic. Zinc and galvanized materials are discouraged because of aquatic toxicity. Painting metal parts shall not be allowed because of poor longevity.

DRAFT

FIGURE 6.2.5.A FLOW SPLITTER, OPTION A

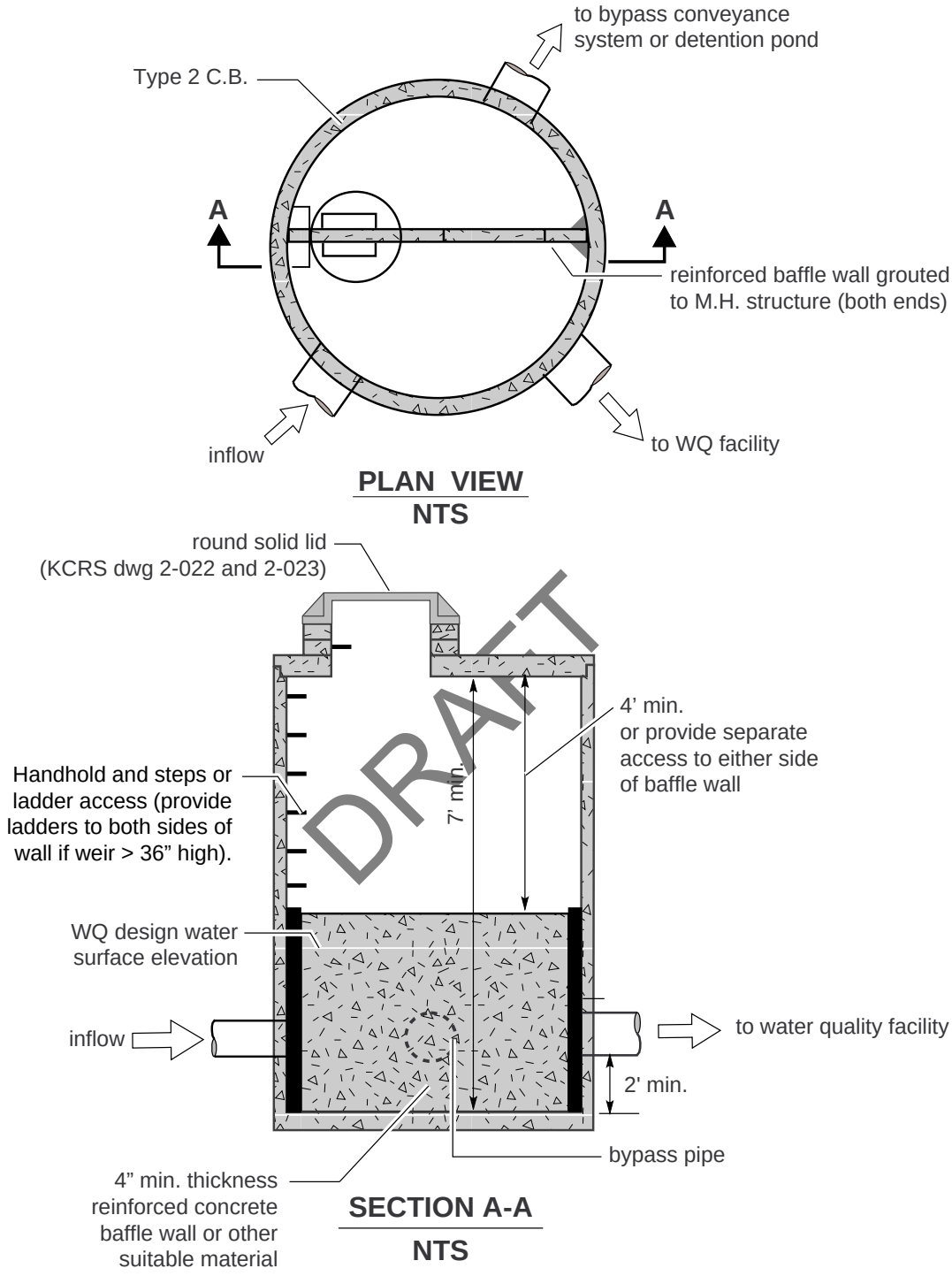

Note: The water quality discharge pipe may require an orifice plate be installed on the outlet to control the height of the design water surface (weir height). The design water surface should be set to provide a minimun headwater/diameter ratio of 2.0 on the outlet pipe.

FIGURE 6.2.5.B FLOW SPLITTER, OPTION B

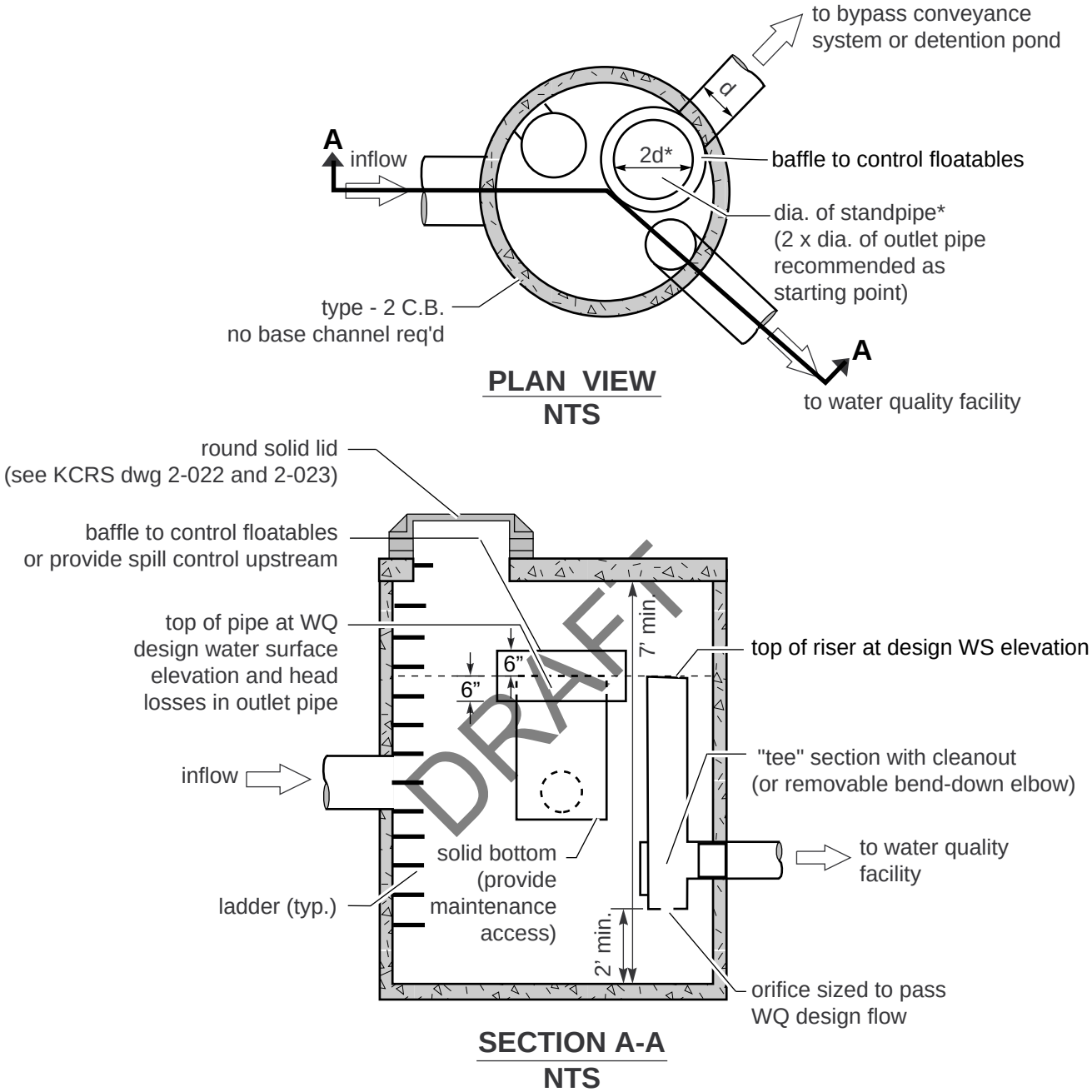

* **NOTE:** Diameter (d) of standpipe should be large enough to minimize head above WQ design WS and to keep WQ design flows from increasing more than 10% during 100-year flows.

6.2.6 FLOW SPREADING OPTIONS

Flow spreaders function to uniformly spread flows across the inflow portion of water quality facilities (e.g., sand filter, biofiltration swale, or filter strip). There are five flow spreader options presented in this section:

- Anchored plate (Option A)
- Concrete sump box (Option B)
- Notched curb spreader (Option C)
- Through-curb ports (Option D)
- Interrupted curbing (Option E).

Options A through C may be used for spreading flows that are concentrated. Any one of these options may be used when spreading is required by the facility design criteria. Options A through C may also be used for unconcentrated flows, and in some cases must be used, such as to correct for moderate grade changes along a filter strip.

Options D and E are only for flows that are already unconcentrated and enter a filter strip or continuous inflow biofiltration swale. Other flow spreader options are possible with approval from DDES.

6.2.6.1 DESIGN CRITERIA FOR FLOW SPREADER OPTIONS

DRAFT

General Design Criteria

1. Where flow enters the flow spreader through a pipe, it is recommended that the **pipe be submerged** to the extent practical to dissipate energy as much as possible.
2. For **higher velocity inflows** (greater than 5 cfs for the 100-yr storm), a Type 1 catch basin should be positioned in the spreader, and the inflow pipe should enter the catch basin with flows exiting through the top grate. The top of the grate should be lower than the level spreader plate, or if a notched spreader is used, lower than the bottom of the v-notches.
3. Table 4.2.2.F in Chapter 4 provides general guidance for rock protection at outfalls.

❑ OPTION A — ANCHORED PLATE (FIGURE 6.2.6.A)

1. An anchored plate flow spreader shall be **preceded by a sump** having a minimum depth of 8 inches and minimum width of 24 inches. If not otherwise stabilized, the sump area shall be lined to reduce erosion and to provide energy dissipation.
2. The top surface of the flow spreader plate **shall be level**, projecting a minimum of 2 inches above the ground surface of the water quality facility, or **v-notched** with notches 6 to 10 inches on center and 1 to 6 inches deep (use shallower notches with closer spacing). Alternative designs are allowed.
3. A flow spreader plate shall extend horizontally beyond the bottom width of the facility to prevent water from eroding the side slope. The **horizontal extent** should be such that the bank is protected for all flows up to the 100-year flow or the maximum flow that will enter the WQ facility.
4. Flow spreader plates shall be **securely fixed in place**.
5. Flow spreader plates may be made of either **wood, metal, fiberglass reinforced plastic, or other durable material**. If wood, pressure treated 4 by 10-inch lumber or landscape timbers are acceptable.
6. **Anchor posts** shall be 4-inch square concrete, tubular stainless steel, or other material resistant to decay.

❑ OPTION B — CONCRETE SUMP BOX (FIGURE 6.2.6.B)

1. The **wall of the downstream side** of a rectangular concrete sump box shall extend a minimum of 2 inches above the treatment bed. This serves as a weir to spread the flows uniformly across the bed.
2. The **downstream wall** of a sump box shall have "wing walls" at both ends. **Side walls and returns** shall be slightly higher than the weir so that erosion of the side slope is minimized.
3. **Concrete** for a sump box may be either cast-in-place or precast, but the bottom of the sump shall be reinforced with wire mesh for cast-in-place sumps.
4. Sump boxes shall be placed over bases that consists of 4 inches of crushed rock, $^{5}/_{8}$-inch minus to help assure the sump remains level.

❑ OPTION C — NOTCHED CURB SPREADER (FIGURE 6.2.6.C)

Notched curb spreader sections shall be made of extruded concrete laid side by side and level. Typically five "teeth" per four-foot section provide good spacing. The space between adjacent "teeth" forms a v-notch.

❑ OPTION D — THROUGH-CURB PORTS (FIGURE 6.2.6.D)

Unconcentrated flows from paved areas entering filter strips or continuous inflow biofiltration swales may use curb ports or interrupted curbs (Option E) to allow flows to enter the strip or swale. Curb ports use fabricated openings that allow concrete curbing to be poured or extruded while still providing an opening through the curb to admit water to the WQ facility.

Openings in the curb shall be at regular intervals but at least every 6 feet (minimum). The width of each curb port opening shall be a minimum of 11 inches. Approximately 15 percent or more of the curb section length should be in open ports, and no port should discharge more than about 10 percent of the flow.

❑ OPTION E — INTERRUPTED CURB (NO FIGURE)

Interrupted curbs are sections of curb placed to have gaps spaced at regular intervals along the total width (or length, depending on facility) of the treatment area. At a minimum, **gaps** shall be every 6 feet to allow distribution of flows into the treatment facility before they become too concentrated. The opening shall be a minimum of 11 inches. As a general rule, no opening should discharge more than 10 percent of the overall flow entering the facility.

DRAFT

FIGURE 6.2.6.A FLOW SPREADER OPTION A: ANCHORED PLATE

Example of anchored plate used with a sand filter* (may also be used with other water quality facilities).

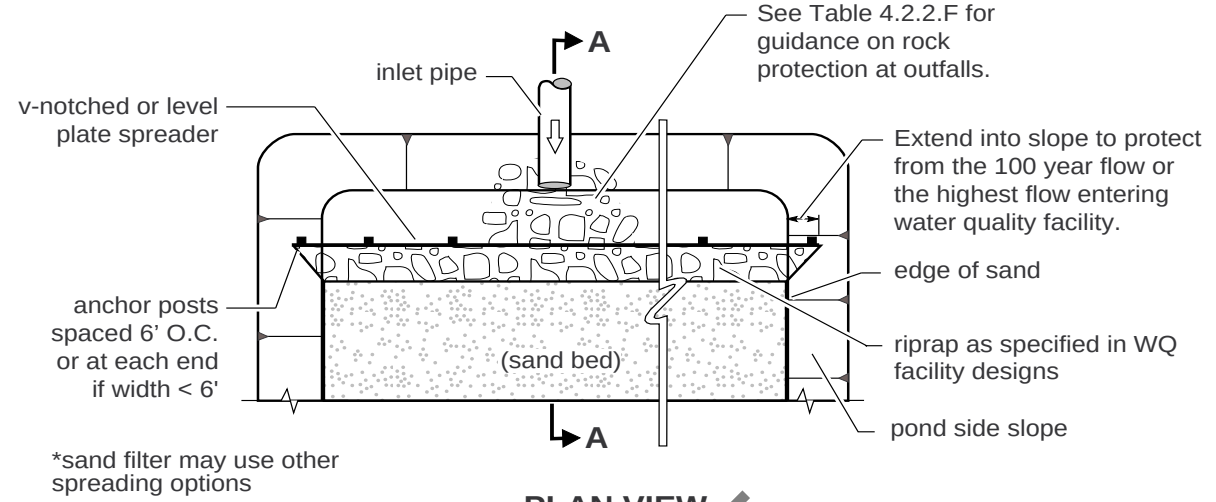

*sand filter may use other spreading options

PLAN VIEW
NTS

DRAFT

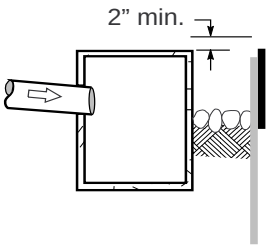

Alternative Design
Catch basin recommended for higher flow situations (generally for inflow velocities of 5 fps or greater for 100 year storm).

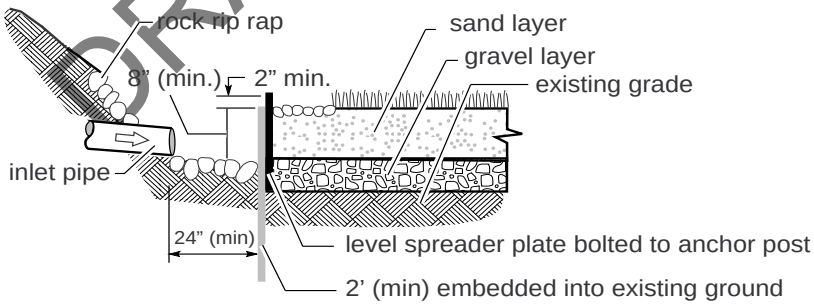

SECTION A-A
NTS

FIGURE 6.2.6.B FLOW SPREADER OPTION B: CONCRETE SUMP BOX

Example of a concrete sump flow spreader used with a biofiltration swale (may be used with other WQ facilities).

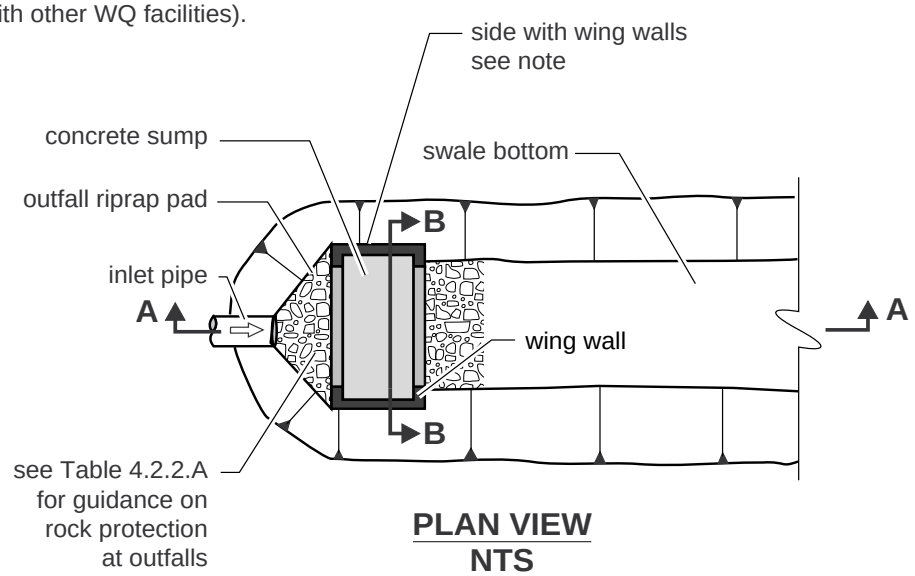

PLAN VIEW
NTS

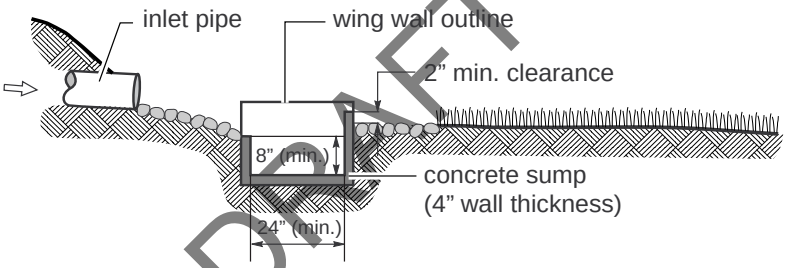

Note: Extend sides into slope. Height of side wall and wing walls must be sufficient to handle the 100-year flow or the highest flow entering the facility.

SECTION A-A
NTS

DRAFT

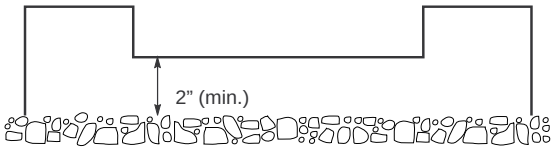

SECTION B-B
NTS

FIGURE 6.2.6.C FLOW SPREADER OPTION C: NOTCHED CURB SPREADER

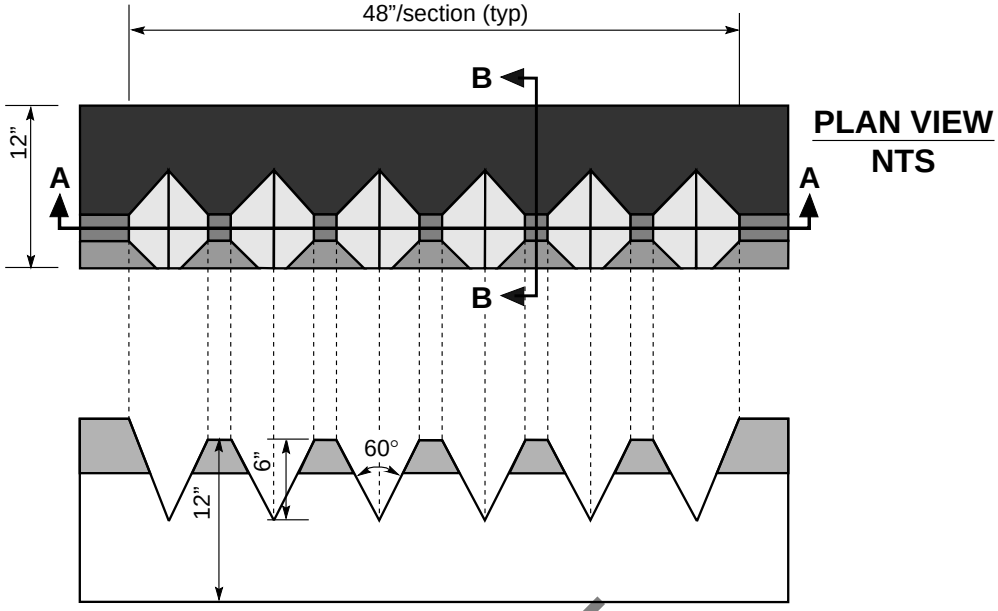

FRONT VIEW A-A
NTS

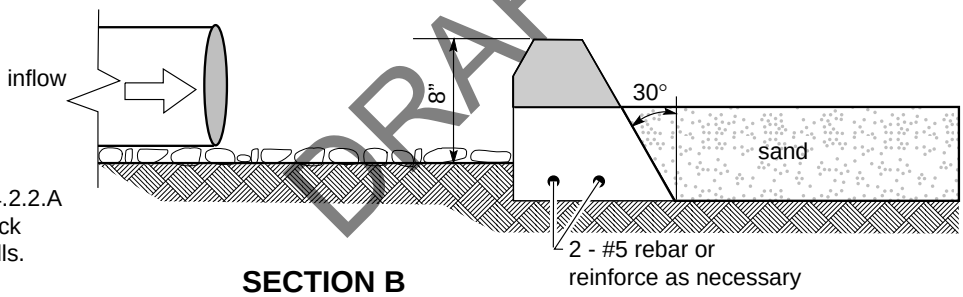

Note: See Table 4.2.2.A for guidance on rock protection at outfalls.

SECTION B
NTS

DRAFT

FIGURE 6.2.6.D FLOW SPREADER OPTION D: THROUGH-CURB PORT

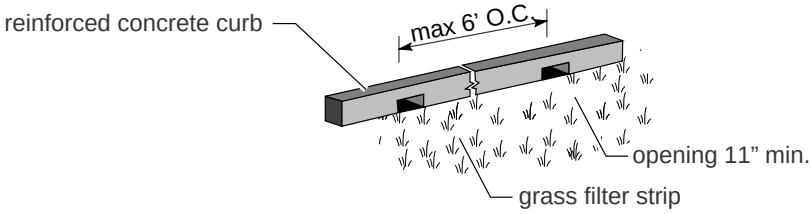

CURB PORT
NTS

DRAFT

6.3 BIOFILTRATION FACILITY DESIGNS

This section presents the methods, details of analysis, and design criteria for biofiltration swales and filter strips. Included in this section are the following specific facility designs:

- "Basic Biofiltration Swales," Section 6.3.1
- "Wet Biofiltration Swales," Section 6.3.2 (p. 6-55)
- "Continuous Inflow Biofiltration Swales," Section 6.3.3 (p. 6-58)
- "Basic Filter Strips," Section 6.3.4 (p. 6-59)
- "Narrow Area Filter Strips," Section 6.3.5 (p. 6-66).

The information presented for each facility is organized into the following two categories:

1. **Methods of Analysis:** Contains a step-by-step procedure for designing and sizing each facility.
2. **Design Criteria:** Contains the details, specifications, and material requirements for each facility.

6.3.1 BASIC BIOFILTRATION SWALES

A *biofiltration swale* is an open, gently sloped, vegetated channel designed for treatment of stormwater (see the details in Figure 6.3.1.A through Figure 6.3.1.E beginning on page 6-52). The primary pollutant removal mechanisms are filtration by grass blades which enhance sedimentation, and trapping and adhesion of pollutants to the grass and thatch. Biofiltration swales generally do not remove dissolved pollutants effectively.

DRAFT

Applications and Limitations

A biofiltration swale is designed so that water will flow evenly across the entire width of a densely-vegetated area. A swale may be designed for both treatment and conveyance of onsite stormwater flow. This combined use can reduce development costs by eliminating the need for separate conveyance systems.

Biofiltration swales are best applied on a relatively small scale (generally less than 5 acres of impervious surface). They work well along roadways, driveways, and parking lots. Swales are more costly to apply in situations where the swale channel would be deep; in deep swales, self-shading can inhibit the necessary grass growth, resulting in poor pollutant removal performance. Some specific considerations for biofiltration swale applications are as follows:

- A biofiltration swale **shall not be located in a shaded area**. For healthy grass growth, a swale should receive a minimum of 6 hours of sunlight daily during the summer months throughout the length of the swale.
- To maintain healthy grass growth, a **swale must dry between storms**. It shall not receive continuous base flows (such as seepage from a hill slope throughout the winter) or be located in a high groundwater area, because saturated soil conditions will kill grass. If these conditions are likely to occur, design options given under "Design Criteria" (p. 6-43) shall be used, or the wet biofiltration swale design may be used (see Section 6.3.2, p. 6-55, for details).
- Stormwater runoff carrying **high concentrations of oil and grease** impairs the treatment capability of a swale. Oil control options given in Section 6.6 (p. 6-139) should be applied in these situations.
- **Modifying an existing drainage ditch** to create an engineered biofiltration swale may be difficult due to physical constraints and because ditches often serve as conveyance for flows from larger offsite areas.

- **Utilities** may be located in swale side slopes above the WQ design depth. However, the repair or placement of utilities in swale side slopes requires aggressive implementation of erosion control practices to prevent soil and sediment from reaching the treatment area of the swale.

Note: Consult the water quality menus in Section 6.1 (p. 6-3) for information on how this facility may be used to meet Core Requirement # 8. Also see Table 6.1.1.A on page 6-5 for guidance on which type of biofiltration swale (basic, wet or continuous inflow) to use for a given set of ***site*** *characteristics.*

6.3.1.1 METHODS OF ANALYSIS

Biofiltration swale sizing is based on several variables, including the peak water quality design flow, longitudinal slope, vegetation height, bottom width, side slope, required hydraulic residence time (i.e., the time required for flow to travel the full length of the swale), and design flow depth. Swales sized and built using the method of analysis outlined in this section and the required design criteria presented in Section 6.3.1.2 are expected to meet the Basic Water Quality menu goal of 80% TSS removal. Procedures for sizing swales are summarized below.

Step 1: Calculate design flows. The swale design is based on the water quality design flow Q_{wq} (see Section 6.2.1, p. 6-17, for a definition of water quality design flow). If a biofilter is used for conveyance, the capacity requirements of Core Requirement #4 must be met. These flows must be estimated using the hydrologic analysis procedures described in detail in Chapter 3. If the swale is located downstream of an onsite detention facility, the swale design flow shall be the 2-year release rate from the detention facility.

Step 2: Calculate swale bottom width. The swale bottom width is calculated based on Manning's equation for open-channel flow. This equation can be used to calculate discharges as follows:

$$Q = \frac{1.49}{n} A R^{0.67} s^{0.5} \qquad (6\text{-}1)$$

where
Q = flow rate (cfs)
n = Manning's roughness coefficient (unitless)
A = cross-sectional area of flow (sf)
R = hydraulic radius (ft) = area divided by wetted perimeter
s = longitudinal slope (ft/ft)

For shallow flow depths in swales, channel side slopes are ignored in the calculation of bottom width. Use the following equation (a simplified form of Manning's formula) to estimate the swale bottom width:

$$b = \frac{Q_{wq} n_{wq}}{1.49 y^{1.67} s^{0.5}} \qquad (6\text{-}2)$$

where
b = bottom width of swale (ft)
Q_{wq} = water quality design flow (cfs)
n_{wq} = Manning's roughness coefficient for shallow flow conditions = 0.20 (unitless)
y = design flow depth (ft)
s = longitudinal slope (along direction of flow) (ft/ft)

See "Water Depth and Base Flow" (p. 6-44) to determine the allowable design water depth. Proceed to Step 3 if the bottom width is calculated to be between 2 and 10 feet.

A minimum 2-foot bottom width is required. Therefore, if the calculated bottom width is less than 2 feet, increase the width to 2 feet and recalculate the design flow depth y using Equation (6-3) as follows:

DRAFT

$$y = \left(\frac{Q_{wq} n_{wq}}{1.49 s^{0.5} b} \right)^{3/5} \tag{6-3}$$

where Q_{wq}, n_{wq}, and s are the same values as used in Equation (6-2), but b = 2 feet.

The maximum bottom width is 10 feet; therefore if the calculated bottom width exceeds 10 feet, then one of the following steps is necessary to reduce the design bottom width:

- Increase the longitudinal slope s to a maximum of 6 feet in 100 feet (0.06 feet per foot).
- Increase the design flow depth y to a maximum of 4 inches (0.333 feet).
- Reduce the design flow rate by rearranging the swale location with respect to detention facilities; a swale located downstream of a detention facility may have a lower flow rate due to flow attenuation in the detention facility. However, if a swale is located downstream of a detention facility providing Level 2 or Level 3 flow control, and it is located in till soils (according to the KCRTS soil group in Chapter 3), then the swale must be designed as a wet biofiltration swale (see Section 6.3.2, p. 6-55).
- Place a divider lengthwise along the swale bottom (cross section) at least three-quarters of the swale length (beginning at the inlet), without compromising the design flow depth and swale lateral slope requirements. See "Design Criteria" (p. 6-43) for swale divider requirements. A flow spreader must be provided at the inlet to evenly divide flows into each half of the swale cross section. See Section 6.2.6 (p. 6-33) for details on flow spreaders.

Step 3: Determine design flow velocity. To calculate the design flow velocity through the swale, use the flow continuity equation:

$$V_{wq} = \frac{Q_{wq}}{A_{wq}} \tag{6-4}$$

where V_{wq} = design flow velocity (fps)
A_{wq} = $by + Zy^2$ = cross-sectional area (sf) of flow at design depth
Z = side slope length per unit height (e.g., Z = 3 if side slopes are 3H:1V)

If the design flow velocity exceeds 1 foot per second, go back to Step 2 and modify one or more of the design parameters (longitudinal slope, bottom width, or flow depth) to reduce the design flow velocity to 1 foot per second or less. If the design flow velocity is calculated to be less than 1 foot per second, proceed to Step 4. *Note: It is desirable to have the design velocity as low as possible, both to improve treatment effectiveness and to reduce swale length requirements.*

Step 4: Calculate swale length. Use the following equation to determine the necessary swale length to achieve a hydraulic residence time of at least 9 minutes (540 seconds):

$$L = 540 V_{wq} \tag{6-5}$$

where L = minimum allowable swale length (ft)
V_{wq} = design flow velocity (fps)

The minimum swale length is 100 feet; therefore, if the swale length is calculated to be less than 100 feet, increase the length to a minimum of 100 feet, leaving the bottom width unchanged. If a larger swale could be fitted on the ***site***, consider using a greater length to increase the hydraulic residence time and improve the swale's pollutant removal capability. If the calculated length is too long for the ***site***, or if it

DRAFT

would cause layout problems, such as encroachment into shaded areas, proceed to Step 5 to further modify the layout. If the swale length can be accommodated on the ***site***, proceed to Step 6.

Step 5: Adjust swale layout to fit on site. If the swale length calculated in Step 4 is too long for the ***site***, the length may be reduced (to a minimum of 100 feet) by increasing the bottom width up to a maximum of 16 feet, **as long as the 9 minute retention time is retained**. However, the length cannot be increased in order to reduce the bottom width because Manning's depth-velocity-flow rate relationships would not be preserved. If the bottom width is increased to greater than 10 feet, a low dividing berm is needed to split the swale cross section in half.

Length can be adjusted by finding the top area of the swale and providing an equivalent top area with the adjusted dimensions.

a) Calculate the swale treatment top area based on the swale length calculated in Step 4:

$$A_{top} = (b_i + b_{slope})\, L_i \qquad (6\text{-}6)$$

where A_{top} = top area (sf) at the design treatment depth
b_i = bottom width (ft) calculated in Step 2
b_{slope} = the additional top width (ft) above the side slope for the design water depth (for 3:1 side slopes and a 4-inch water depth, b_{slope} = 2 feet)
L_i = initial length (ft) calculated in Step 4.

b) Use the swale top area and a reduced swale length L_f to increase the bottom width, using the following equation:

$$L_f = \frac{A_{top}}{(b_f + b_{slope})} \qquad (6\text{-}7)$$

where L_f = reduced swale length (ft)
b_f = increased bottom width (ft).

c) Recalculate V_{wq} according to Step 3 using the revised cross-sectional area A_{wq} based on the increased bottom width b_f. Revise the design as necessary if the design flow velocity exceeds 1 foot per second.

d) Recalculate to assure that the 9 minute retention time is retained.

Step 6: Provide conveyance capacity for flows higher than Q_{wq}. Biofiltration swales may be designed as flow-through channels that convey flows higher than the water quality design flow rate, or they may be designed to incorporate a high-flow bypass upstream of the swale inlet. A high-flow bypass usually results in a smaller swale size (see flow splitter options, page 6-29, for more information on designing bypasses). If a high-flow bypass is provided, this step is not needed. If no high-flow bypass is provided, proceed with the procedure below.

a) Check the swale sized using Steps 2 through 5 above to determine whether the swale can convey the 25-year and 100-year peak flows consistent with the conveyance requirements of Core Requirement #4 in Chapter 1. The roughness coefficient *n* in Manning's equation shall be selected to reflect the deeper flow conditions with less resistance provided by grass during these high-flow events. The bottom width (Step 2) should be calculated as per Section 4.4.1.2, "Methods of Analysis" for open channels.

b) The 100-year peak flow velocity ($V_{100} = Q_{100}/A_{100}$) based on the 100-year flow depth must be less than 3.0 feet per second. If V_{100} exceeds 3.0 feet per second, return to Step 2 and increase the bottom width or flatten the longitudinal slope as necessary to reduce the 100-year peak flow velocity to 3.0 feet per second or less. If the longitudinal slope is flattened, the swale bottom width must be recalculated (Step 2) and meet all design criteria.

DRAFT

c) The conveyance requirements in Core Requirement #4 (see Section 1.2.4) must be met.

6.3.1.2 DESIGN CRITERIA

An effective biofiltration swale achieves uniform sheet flow over and through a densely vegetated area for a period of several minutes. Figure 6.3.1.A (p. 6-52) shows a typical biofiltration swale schematic. Basic design requirements for achieving proper flow conditions through a biofiltration swale are described below.

Swale Geometry

1. Swale **bottom width** shall be between 2 and 16 feet.[15]
   a) **Minimum bottom width** is 2 feet to allow for ease of mowing.
   b) If the bottom width exceeds 10 feet, a length-wise divider shall be provided. The divider shall extend from the flow spreader at the inlet for at least three-quarters of the swale length.
   c) **Maximum bottom width** is 16 feet, excluding the width of the divider.

   Note: Multiple swales may be placed side by side provided the flow to each swale is split at the inlet and spread separately for each swale. Adjacent swales may be separated with a vertical wall, but a low berm is preferred for easier maintenance and better landscape integration.
2. The **longitudinal slope** (along the direction of flow) shall be between 1 percent and 6 percent.
   a) If the longitudinal slope is less than 1.5 percent, **underdrains** must be provided (see next page and Figure 6.3.1.C, p. 6-53, for underdrain specifications).
   b) If the longitudinal slope is less than 1 percent, the swale must be designed according to the criteria presented in Section 6.3.2 (p. 6-55) for **wet biofiltration swales**.
   c) If the longitudinal slope exceeds 6 percent, **check dams** with vertical drops of 12 inches or less shall be provided to achieve a bottom slope of 6 percent or less between the drop sections.
3. The swale shall be **flat** in cross section (perpendicular to the flow direction) to promote even flow across the whole width of the swale.
4. The **minimum swale length** shall be 100 feet; no maximum length is set.
5. The **swale treatment area** (below the WQ design water depth) shall be trapezoidal in cross-section. If trapezoidal, **side slopes within the treatment area** should be 3H:1V or flatter whenever possible, but shall not steeper than 2H:1V.
6. **Side slope sections above the treatment area** may be steeper than 3H:1V, subject to the following provisions:
   a) If there is an interior side slope between 1H:1V and 2H:1V outside the treatment area, the slope shall be reinforced with **erosion control netting or matting** during construction.
   b) Any interior slope steeper than 1H:1V shall be constructed as a **rockery or structural retaining wall**[16] to prevent the swale slope from sloughing. To ensure that adequate sunlight reaches the swale bottom, **only one wall can be taller than 2 feet.** If possible, the higher wall should be on the northern or eastern side of the swale to maximize the amount of light reaching the swale bottom.

DRAFT

[15] Experience with biofiltration swales shows that when the width exceeds about 10 feet it is difficult to keep the water from forming low-flow channels. It is also difficult to construct the bottom level and without sloping to one side. Biofilters are best constructed by leveling the bottom after excavating, and after the soil is amended. A single-width pass with a front-end loader produces a better result than a multiple-width pass.

[16] Soil bioengineering techniques may be used as an alternative to a rockery or structural retaining wall.

7. **Curved swales** are encouraged for aesthetic reasons, but curves must be gentle to prevent erosion and allow for vehicle access to remove sediment. Criteria for maintenance access road curves shall also be applied for swale curves (see Section 5.3.1.1 for design of access roads).

Water Depth and Base Flow

1. A swale that will be **frequently mowed**, as in commercial or landscaped areas, shall have a **design water depth** of no more than 2 inches (0.17 feet) under the water quality design flow conditions.
2. A swale that will **not be frequently mowed**, such as along roadsides or in rural areas, shall have a **design water depth** of no more than 4 inches (0.33 feet) under the water quality design flow conditions.
3. If a swale is located **downstream of a detention facility providing Level 2 or Level 3 flow control**, and it is located in till soils (according to the KCRTS soil group in Chapter 3), then the swale must be designed as a **wet biofiltration swale** (see Section 6.3.2, p. 6-55).
4. If a swale will receive **base flows** because of seeps and springs onsite, then either a low-flow drain shall be provided or a wet biofiltration swale shall be used. *Low-flow drains* are narrow surface drains filled with pea gravel that run lengthwise through the swale to bleed off base flows; they should not be confused with underdrains. In general, base flows less than 0.01 cfs per acre can be handled with a low-flow drain. If flows are likely to be in excess of this level, a wet biofiltration swale shall be used.
5. If a **low-flow drain** is used, it shall extend the entire length of the swale. The drain shall be a minimum of 6 inches deep, and its width shall be no greater than 5 percent of the calculated swale bottom width; the width of the drain shall be in addition to the required bottom width. If an anchored plate or concrete sump is used for flow spreading at the swale inlet, the plate or sump wall shall have a v-notch (maximum top width = 5% of swale width) or holes to allow preferential exit of low flows into the drain. See Figure 6.3.1.D (p. 6-54) for low-flow drain specifications and details.

DRAFT

Flow Velocity, Energy Dissipation, and Flow Spreading

1. The **maximum flow velocity** through the swale under the water quality design flow conditions shall not exceed 1.0 foot per second.
2. The **maximum flow velocity** through the swale under the peak 100-year flow conditions shall not exceed 3.0 feet per second.
3. A **flow spreader** shall be used at the inlet of a swale to dissipate energy and evenly spread runoff as sheet flow over the swale bottom. Flow spreaders are recommended but not required at mid-length. For details on various types of flow spreaders, see Section 6.2.6 (p. 6-33).
4. If **check dams** are used to reduce the longitudinal slope of the swale, a **flow spreader** shall be provided at the toe of each vertical drop. The spreader must span the width of the swale. An **energy dissipater** shall also be provided if flows leaving the spreader could be erosive.
5. If a swale **discharges flows to a slope** rather than to a piped system or confined channel, an **energy dissipater** shall be provided at the swale outlet. This requirement also applies to discharges from swale underdrains. The outlet energy dissipater may be a riprap pad sized according to the specifications described in Table 4.2.2.A for conveyance system outfalls.

Underdrains

If underdrains are required by Criterion 2 under "Swale Geometry" (p. 6-43), they must meet the following criteria:

1. Underdrains must be made of **PVC perforated pipe** (SDR 35), laid parallel to the swale bottom and backfilled and bedded as shown in Figure 6.3.1.C (p. 6-53).

2. For facilities to be maintained by the County, the underdrain pipe must be 6 inches or greater in **diameter**. (Six inches is the smallest diameter pipe that can be cleaned without damage to the pipe.)
3. Six inches of clean **drain rock** ($^5/_8$-inch minus) must be above the top of the pipe.
4. The drain rock must be wrapped in **geotextile**. Geotextile requirements are summarized in Table 6.3.1.A below.
5. The underdrain **must infiltrate** into the subsurface **or drain freely** to an acceptable discharge point.

TABLE 6.3.1.A GEOTEXTILE MATERIAL MINIMUM REQUIREMENTS

Geotextile Property	Value	Test Method
Grab Tensile Strength, min in machine and x-direction	250 lbs/160 lbs min.	ASTM D4632
Grab Failure Strain, in machine and x-machine direction	<50%/>50%	ASTM D4632
Seam Breaking Strength (if seams are present)	220 lbs/140 lbs min.	ASTM D4632 and ASTM D4884 (adapted for grab test)
Puncture Resistance	80 lbs/50 lbs min.	ASTM D4833
Tear Strength, min. in machine and x-machine direction	80 lbs/50 lbs min.	ASTM D4533
Ultraviolet (UV) Radiation stability	50% strength min., after 500 hrs. in weather meter	ASTM D4355
AOS	.43 mm max. (#40 sieve)	ASTM D4751
Water Permitivity	.5 sec – 1 min.	ASTM D4491

Notes:

- Minimum values should be in the weaker principal direction. All numerical values represent minimum average roll value (i.e., test results from any sampled lot shall meet or exceed the minimum values in the table). Stated values are for noncritical and nonsevere applications.

AOS: Apparent Opening Size is the measure of the diameter of the pores on the geotextile.

DRAFT

Swale Divider

1. If a swale divider is used (such as when swale bottom widths are greater than 10 feet), the divider shall be constructed of a **firm material** that will resist weathering and not erode, such as treated lumber, concrete, plastic, or compacted soil seeded with grass. Selection of divider material shall take into consideration swale maintenance, especially mowing.
2. The divider shall have a **minimum height** of one inch higher than the water quality design water depth.
3. **Earthen berms** shall be no steeper than 2H:1V.
4. Materials other than earth (e.g. treated lumber, recycled plastic lumber, concrete, etc.) shall be embedded to a depth sufficient to be stable.

Access

1. For swales to be maintained by King County, an **access road** shall be provided to the swale inlet and along one side of the swale according to the schedule shown in Table 6.3.1.B below. *Note: County streets and paved parking areas adjacent to the top of slope may be counted as access.*

TABLE 6.3.1.B REQUIREMENTS FOR BIOFILTRATION SWALE ACCESS ROAD	
Swale Bottom Area*: *L* x *w* (sf)	**Access Road Length**
200 - 1000	$^1/_2$ swale length L
1000 - 1600	$^2/_3$ swale length L
Over 1600	entire swale length L
* The swale area used for computing access road length may be the bottom area.	

2. In areas outside critical area buffers, **wheel strips** made of modular grid pavement may be built into the swale bottom for maintenance vehicle access instead of an access road. The subgrade for the strips must be engineered to support a vehicle weight of 16,000 pounds and installed according to the manufacturer's recommendations on firm native soil or structural fill, not on the amended topsoils. Each strip shall be 18 inches wide and spaced as shown in Figure 6.3.1.E (p. 6-54). The strip lattice should be filled or covered with native soil (no amendments required) and overseeded with grass. If a low-flow drain is also needed (see "Water Depth and Base Flow" on page 6-44), a portion of the wheel strip may be filled with pea gravel as appropriate to form the drain. Continuous vehicle access shall be provided to the wheel strips from the access road. If access to the wheel strips is over the flow-spreader, then a grate (or other DDES approved method) shall be placed over the flow-spreader for vehicle access. Wheel strips shall not be counted as treatment area; therefore, the swale bottom width must be increased accordingly.

DRAFT

Soil Amendment

1. Two inches (minimum) of **well-rotted compost** shall be tilled into the entire swale treatment area to amend the topsoil unless the soil already has an organic content of 1 percent or greater. This applies to both till soils as well as sandy soils. In very coarse soils (gravels or courser), **top soil** must be imported and amended to the required organic content.

   a) Compost must be tilled into the underlying native soil to a depth of 6 inches to prevent the compost from being washed out and to avoid creating a defined layer of different soil types that can prevent downward percolation of water.

   b) Compost shall not contain any sawdust, straw, green or under-composted organic matter, or toxic or otherwise harmful materials.

   c) Compost shall not contain unsterilized manure because it can leach fecal coliform bacteria into receiving waters.

2. **Soil or sod** with a clay content of greater than 10 percent should be avoided. If there is concern for contamination of the underlying groundwater, the swale bottom shall be lined with a treatment liner to prevent groundwater contamination. See Section 6.2.4 (p. 6-23) for details on treatment liner options.

Planting Requirements

1. Grass shall be established throughout the entire treatment area of the swale subject to the following provisions:

   a) **Seeding** is best performed in spring (mid-March to June) or fall (late September to October). For summer seeding, sprinkler systems or other measures for watering the grass seed must be provided.

   b) Seed may be applied via **hydroseeding** or broadcast application.

   c) **Irrigation** is required during the first summer following installation if seeding occurs in spring or summer. Swales seeded in the fall may not need irrigation. However, the maintenance and defect financial guarantee will not be released unless a healthy grass cover is established. Therefore, ***site*** planning should address the need for sprinklers or other means of irrigation.

2. Swale treatment areas are subject to both dry and wet conditions, as well as accumulation of sediment and debris. A mixture of dry-area and wet-area grass species that can continue to grow through silt deposits is most effective. Two acceptable **grass seed mixes** for the King County area are listed in Table 6.3.1.C (p. 6-48). The mixes shall be applied throughout the swale in the treatment area at a rate of 80 pounds per acre. As an alternative to these mixes, a horticultural or erosion control specialist may develop a seed specification tailored to the ***site***. Table 6.3.1.D (p. 6-48) lists grasses or other plants particularly tolerant of wet conditions. Some of these seed types, however, may not be commercially available.

3. A newly constructed swale shall be **protected from stormwater flows until grass has been established**. This may be done by diverting flows or by covering the swale bottom with clear plastic until the grass is well rooted. If these actions are not feasible, an erosion control blanket shall be placed over the freshly applied seed mix. See detached Appendix D, *ESC Standards*, for details on erosion control blankets.

4. **Above the design treatment elevation**, either a typical lawn seed mix or landscape plants may be used. However, for swales also used to convey high flows, consideration shall be given to the soil binding capacity of the vegetation. Acceptable grasses and groundcovers are presented in Table 6.3.1.E (p. 6-49). Plant material other than that given in the table may be used if the swale is privately maintained and the plants selected will not spread into the swale treatment area. Ivy shall not be used because of its tendency to spread. Native plant species (e.g., kinnikinnick) are preferred.

   Note: These recommendations are for the King County area. If these designs are used in other areas, local knowledge should be used to tailor these recommendations to local conditions.

5. **Sod** may be used as a temporary cover during the wet season, but sodded areas must be reseeded with a suitable grass seed mix as soon as the weather is conducive to seed germination, unless the sod is grown from a seed mix suitable for the wetter conditions of a biofiltration swale. Sod must be removed or rototilled into the underlying soil before reseeding. Criteria #1 and 2 above for seeding shall then be followed.

DRAFT

TABLE 6.3.1.C
GRASS SEED MIXES SUITABLE FOR BIOFILTRATION SWALE TREATMENT AREAS

Mix 1		Mix 2	
75-80 percent	Tall or Meadow Fescue	60-70 percent	Tall Fescue
10-15 percent	Seaside Creeping Bentgrass or Colonial Bentgrass	10-15 percent	Seaside Creeping Bentgrass or Colonial Bentgrass
5-10 percent	Redtop	10-15 percent	Meadow Foxtail
		6-10 percent	Alsike Clover
		1-5 percent	Marshfield Big Trefoil
		1-6 percent	Redtop
Note: All percentages are by weight.			

TABLE 6.3.1.D FINELY-TEXTURED PLANTS TOLERANT OF FREQUENT SATURATED SOIL CONDITIONS OR STANDING WATER

Grasses		Wetland Plants	
Water Foxtail	*Alopecurus geniculatus*	Sawbeak Sedge	*Carex stipata*
Shortawn Foxtail	*Alopecurus aequalis*	Spike Rush	*Eleocharis palustris*
Bentgrass	*Agrosits* spp.	Slender Rush	*Juncus tenuis*
Spike Bentgrass	*A. exarata*	Grass-leaf rush	*Juncus marginatus*
Redtop	*A. alba* or *gigantea*		
Colonial Bentgrass	*A. tenuis* or *capillaris*		
Mannagrass	*Glyceria* spp.		
Western	*G. occidentalis*		
Northern	*G. borealis*		
Slender-Spiked	*G. leptostachya*		
Rough-Stalked Bluegrass	*Poa trivialis*		
Velvet Grass	*Holcus mollis*		

DRAFT

TABLE 6.3.1.E GROUNDCOVERS AND GRASSES SUITABLE FOR THE UPPER SIDE SLOPES OF A BIOFILTRATION SWALE	
Groundcovers	
Kinnikinnick*	*Arctostaphylos uva-ursi*
Epimedium	*Epimedium grandiflorum*
—	*Euonymus lanceolata*
Strawberry*	*Fragaria chiloensis*
—	*Genista*
St. John's-Wort	*Hypericum sempervirens*
Broadleaf Lupine*	*Lupinus latifolius*
White Sweet Clover*	*Melilotus alba*
Creeping Forget-Me-Not	*Omphalodes verna*
—	*Rubus calycinoides*
White Lawn Clover	*Trifolium repens*
Yellow-Root	*Xanthorhiza simplissima*
Grasses (drought-tolerant, minimum mowing)	
Buffalo Grass	*Buchloe dactyloides*
Tufted Fescue	*Festuca amethystina*
Tall Fescue *	*Festuca arundinacea*
Hard Fescue	*Festuca ovina duriuscula* (e.g., Reliant, Aurora)
Red Fescue*	*Festuca rubra*
Dwarf Tall Fescues	*Festuca* spp. (e.g., Many Mustang, Silverado)
Blue Oatgrass	*Helictotrichon sempervirens*
Low-growing turf mix: 40% dwarf tall fescue 30% dwarf perenial rye "Barclay" 25% red fescue 5% colonial bentgrass	
* *Native species.* *Notes*: • *Many other ornamental grasses which require only annual mowing are suitable.* • *Ivy is not permitted because of its tendency to spread.*	

DRAFT

Recommended Design Features

The following features should be incorporated into biofiltration swale designs where ***site*** conditions allow.

Swale Layout and Grading

1. If the longitudinal slope is less than 1.5 percent (requiring the use of underdrains along the swale length), the **subgrade** should contain 10 percent or more of sand to promote infiltration of standing water. If sand is added to promote drainage, the soil or sand substrate must still be amended with compost.

2. **Underdrains** are also recommended for swales greater than 1.5 percent longitudinal slope on till soils, especially if it is likely that the swale will intercept groundwater.
3. Biofiltration swales should be aligned to avoid sharp bends where erosion of the swale side slope can occur. However, gradual meandering bends in the swale are desirable for aesthetic purposes and to promote slower flow.

Location and Landscaping

1. During seeding, slow-release **fertilizers** may be applied to speed the growth of grass. If the swale is located in a sensitive lake watershed, low phosphorus fertilizers (such as formulations in the proportion 3:1:3 N-P-K or less) or a slow-release phosphorus formulation such as rock phosphate or bone meal should be used. A typical fertilizer application rate should be 2 pounds per 1,000 square feet. If animal manures are used in the fertilizer, they must be sterilized to avoid leaching fecal coliform bacteria into receiving waters.
2. Consultation with a **landscape or erosion control specialist** is recommended for project-specific recommendations on grass seed, fertilizer, and mulching applications to ensure healthy grass growth. The **grass mix** should be capable of surviving and remaining healthy under both dry and wet conditions with limited maintenance.
3. A grassy swale should be incorporated into the ***project site*** landscape design. **Shrubs** may be planted along the edges of a swale (above the WQ treatment level) provided that exposure of the swale bottom to sunlight and maintenance accessibility are not compromised. *Note: For swales used to convey high flows, the plant material selected must bind the soil adequately to prevent erosion.*
4. Swales should not be located in areas where **trees** will drop leaves or needles that can smother the grass or clog part of the swale flowpath. Likewise, landscaping plans should take into consideration the problems that **falling leaves and needles** can cause for swale performance and maintenance. Landscape **planter beds** should be designed and located so that soil does not erode from the beds and enter a nearby biofiltration swale.

DRAFT

Construction Considerations

1. If a biofiltration swale is put into operation before all construction in the drainage area of the swale is complete, the swale must be cleaned of sediment and reseeded prior to acceptance by the County. The County will not release financial guarantees if swales are not restored and vigorous grass growth established.
2. It is preferable to provide good erosion control before runoff enters a biofiltration swale. Swales are designed to handle only modest sediment loads from stabilized ***sites***.

Maintenance Considerations

The design criteria given previously have incorporated maintenance concerns into swale design. However, the designer should know the type and frequency of maintenance anticipated so that alternative proposals can incorporate maintenance activity.

Typical swale maintenance includes routine mowing, sediment and debris removal, and repair of eroded or scoured channel sections as described below.

1. Grass should be **mowed to maintain an average grass height** between 4 inches and 9 inches, depending on the ***site*** situation. Monthly mowing is needed from May through September to maintain grass vigor. If a swale is not mowed at least annually, trees and brush will invade the swale and inhibit grass growth, compromising the swale's performance for water quality treatment.
2. **Grass clippings** should be removed from the swale and composted onsite or disposed of properly offsite.

3. **Sediment** deposited at the head of the swale should be removed if grass growth is being inhibited for more than 10 percent of the swale length or if the sediment is blocking the even spreading or entry of water to the rest of the swale. Annual sediment removal and spot reseeding will probably be necessary.
4. If flow **channelization or erosion** has occurred, the swale should be regraded to produce a flat bottom width, and then reseeded as necessary. If the channel results from constant base flow, it may be better to install a low-flow drain rather than to regrade. Regrading should not be required every year.
5. For swales with underdrains, **vehicular access to the swale bottom** (other than grass mowing equipment) should be avoided because the drainpipe cannot support vehicle weight. Consideration should be given to providing wheel strips in the swale bottom if access is needed.

DRAFT

FIGURE 6.3.1.A BIOFILTRATION SWALE SCHEMATIC

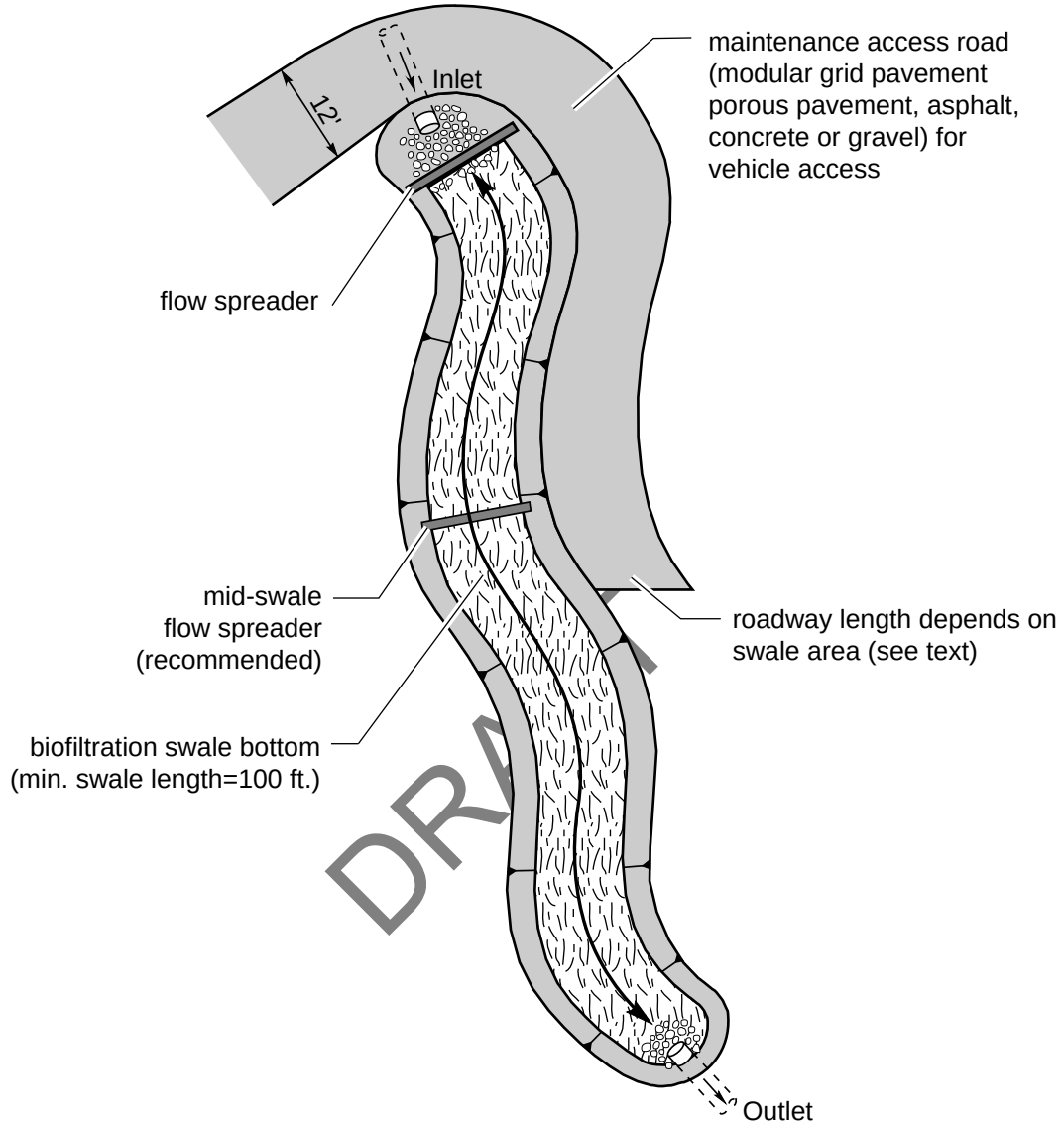

NOTE: Longitudinal slope 1-6%.
Provide underdrain for slopes < 1.5%.

PLAN
NTS

FIGURE 6.3.1.B BIOFILTRATION SWALE CROSS-SECTIONS

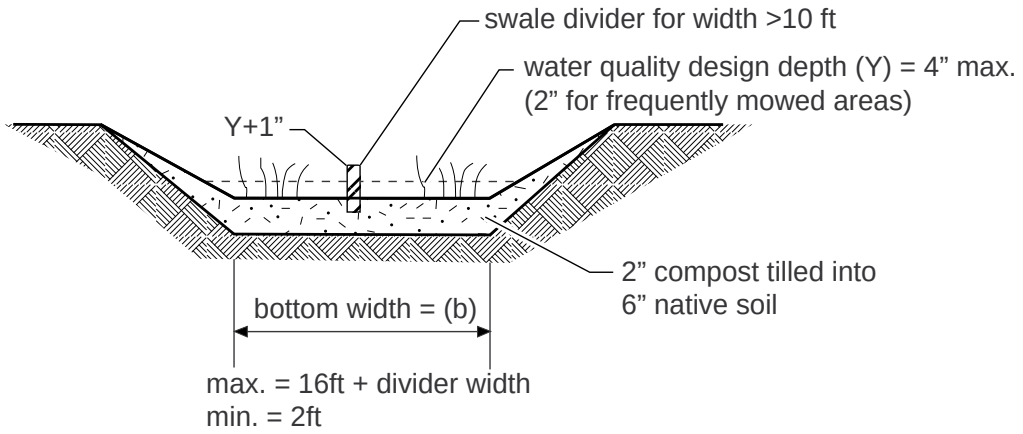

TYPICAL SWALE SECTION
NTS

DRAFT

FIGURE 6.3.1.C BIOFILTRATION SWALE UNDERDRAIN DETAIL

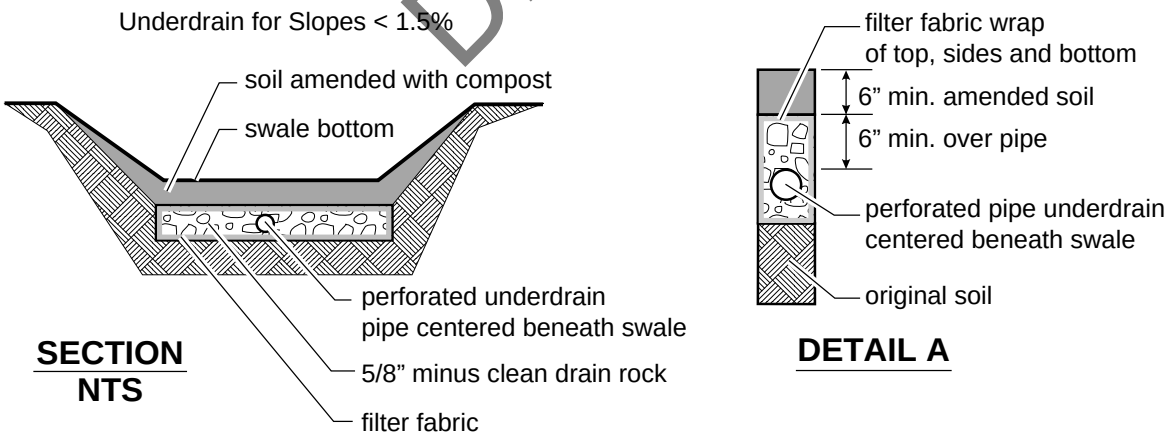

SECTION
NTS

DETAIL A

NOTE: Underdrain must infiltrate or drain freely to an acceptable discharge point.

FIGURE 6.3.1.D BIOFILTRATION SWALE LOW-FLOW DRAIN

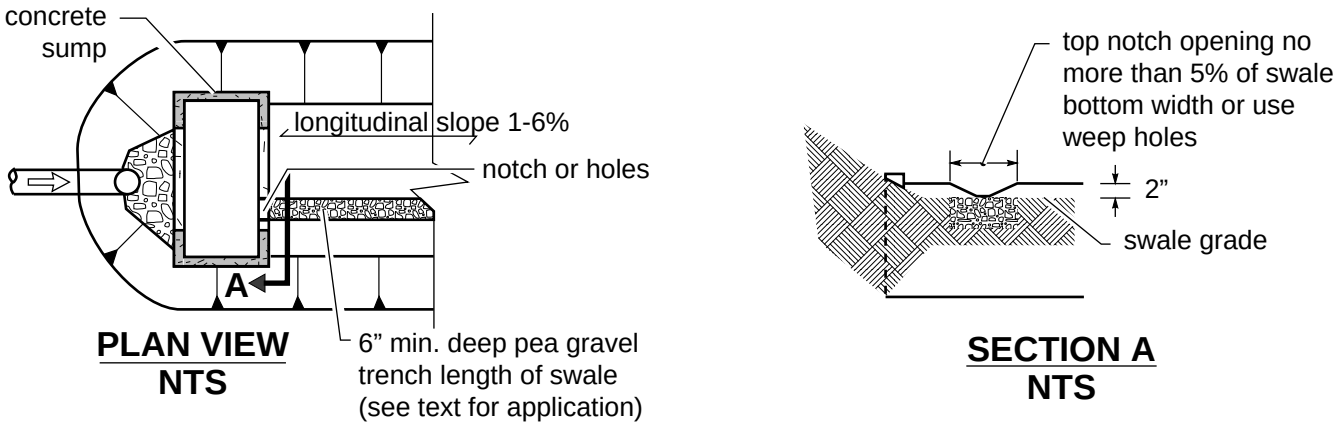

FIGURE 6.3.1.E BIOFILTRATION SWALE WHEEL STRIPS

DRAFT

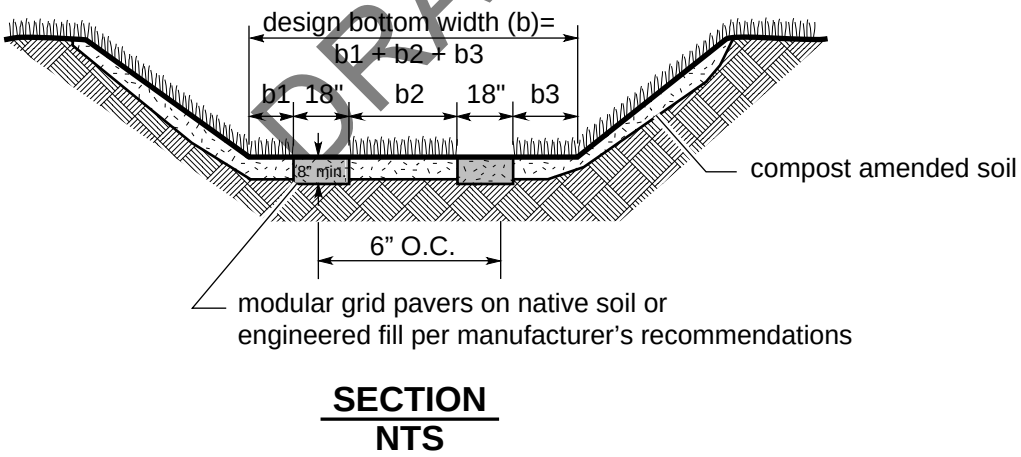

6.3.2 WET BIOFILTRATION SWALES

A *wet biofiltration swale* is a variation of a basic biofiltration swale for use where the longitudinal slope is slight, water tables are high, or continuous low base flow is likely to result in saturated soil conditions. Where saturation exceeds about 2 weeks, typical grasses will die. Thus, vegetation specifically adapted to saturated soil conditions is needed. Different vegetation in turn requires modification of several of the design parameters for the basic biofiltration swale detailed in Section 6.3.1 (p. 6-39).

Applications

Wet biofiltration swales are applied where a basic biofiltration swale is desired but not allowed or advisable because one or more of the following conditions exist:

- The swale is on till soils and is downstream of a detention facility providing Level 2 or 3 flow control.
- Saturated soil conditions are likely because of seeps or base flows on the ***project site***.
- Longitudinal slopes are slight (generally less than 2 percent).

Consult the water quality menus in Section 6.1 (p. 6-3) for information on how this facility may be used to meet Core Requirement #8.

6.3.2.1 METHODS OF ANALYSIS

Wet biofiltration swales use the **same methods of analysis as basic biofiltration swales** (see Section 6.3.1.1, p.6-40) except the following **step is added:**

Step 7: Adjust for extended wet season flow. If the swale will be downstream of a detention facility providing Level 2 or 3 flow control, multiply the treatment area (bottom width times length) of the swale by 2, and readjust the swale length, if desired. Maintain a 5:1 length to width ratio (see criteria under "Swale Geometry" below).

Intent: An increase in the treatment area of swales following Level 2 or 3 detention facilities is required because of the differences in vegetation established in a constant flow environment. Although flows following Level 2 or 3 detention are small, and swales are likewise much smaller than those sized for upstream flows, they are much more protracted. These protracted flows result in more stream-like conditions than are typical for other wet biofilter situations. Since vegetation growing in streams is often less dense, this increase in treatment area is needed to ensure that equivalent pollutant removal is achieved in extended flow situations.

DRAFT

6.3.2.2 DESIGN CRITERIA

Swale Geometry

Same as specified for **basic biofiltration swales** (see Section 6.3.1.2, p. 6-43) except for the following **modifications:**

1. **Criterion 1:** The **maximum bottom width** may be increased to 25 feet, but a length-to-width ratio of 5:1 must be provided. No longitudinal dividing berm is needed. *Note: The minimum swale length is still 100 feet.*
2. **Criterion 2:** If **longitudinal slopes** are greater than 2 percent, the wet swale must be stepped so that the slope within the stepped sections averages 2 percent. Steps may be made of retaining walls, log check dams, or short riprap sections. **No underdrain or low-flow drain is required**.
3. **Criterion 3: Curved swales** are allowed and the application of criteria for maintenance access road curves are not required.

High-Flow Bypass

A high-flow bypass is required for flows greater than the water quality design flow to protect wetland vegetation from damage.[17] The bypass may be an open channel parallel to the wet biofiltration swale.

Water Depth and Base Flow

Same as for basic biofiltration swales (see page 6-44), except the **design water depth** shall be 4 inches or less for all wetland vegetation selections, and **no underdrains or low-flow drains are required**.

Flow Velocity, Energy Dissipation, and Flow Spreading

Same as for basic biofiltration swales (see page 6-44), except **no flow spreader is needed**.

Access

Same as for basic biofiltration swales (see page 6-46) except access is only required to the inflow and the outflow of the swale; access along the length of the swale is not required. Also, wheel strips may not be used for access in the swale.

Intent: An access road is not required along the length of a wet swale because of infrequent access needs. Frequent mowing or harvesting is not desirable. In addition, wetland plants are fairly resilient to sediment-induced changes in water depth, so the need for access should be infrequent.

Soil Amendment

Same as for basic biofiltration swales (see page 6-46).

Planting Requirements

Same as for **basic biofiltration swales** (see page 6-47) except for the following **modifications:**

1. A list of acceptable plants with recommended spacing is given in Table 6.3.2.A (p. 6-57). In general, it is best to plant several species to increase the likelihood that at least some of the selected species will find growing conditions favorable.
2. A wetland seed mix may be applied by hydroseeding, but if coverage is poor, planting of rootstock or nursery stock is required. Poor coverage is considered to be more than 30 percent bare area through the upper $^{2}/_{3}$ of the swale after four weeks.

Recommended Design Features

Same as for basic biofiltration swales (see page 6-49).

Construction Considerations

Same as for basic biofiltration swales (see page 6-50).

Maintenance Considerations

Same as for basic biofiltration swales (see page 6-50), except mowing of wetland vegetation is not required. However, harvesting of very dense vegetation may be desirable in the fall after plant die-back to prevent the sloughing of excess organic material into receiving waters. Many native *Juncus* species remain green throughout the winter; therefore, fall harvesting of *Juncus* species is not recommended.

DRAFT

[17] Unlike grass, wetland vegetation will not quickly regain an upright attitude after being laid down by high flows. New growth, usually from the base of the plant, often taking several weeks, is required to regain its upright form.

TABLE 6.3.2.A RECOMMENDED PLANTS FOR WET BIOFILTRATION SWALE		
Common Name	**Scientific Name**	**Spacing (on center)**
Shortawn foxtail	*Alopecurus aequalis*	seed
Water foxtail	*Alopecurus geniculatus*	seed
Spike rush	*Eleocharis spp.*	4 inches
Slough sedge*	*Carex obnupta*	6 inches or seed
Sawbeak sedge	*Carex stipata*	6 inches
Sedge	*Carex* spp.	6 inches
Western mannagrass	*Glyceria occidentalis*	seed
Velvetgrass	*Holcus mollis*	seed
Slender rush	*Juncus tenuis*	6 inches
Watercress*	*Rorippa nasturtium-aquaticum*	12 inches
Water parsley*	*Oenanthe sarmentosa*	6 inches
Hardstem bulrush	*Scirpus acutus*	6 inches
Small-fruited bulrush	*Scirpus microcarpus*	12 inches

** Good choices for swales with significant periods of flow, such as those downstream of a Level 2 or 3 detention facility.*

Note: Cattail (Typha latifolia) is not appropriate for most wet swales because of its very dense and clumping growth habit which prevents water from filtering through the clump.

DRAFT

6.3.3 CONTINUOUS INFLOW BIOFILTRATION SWALES

In situations where water enters a biofiltration swale continuously along the side slope rather than discretely at the head, a different design approach–the continuous inflow biofiltration swale–is needed. The basic swale design (see Section 6.3.1, p. 6-39) is modified by increasing swale length to achieve an equivalent average residence time.

Applications

A continuous inflow biofiltration swale is to be **used when inflows are not concentrated**, such as locations along the shoulder of a road without curbs. This design may also be **used where frequent, small point flows enter a swale**, such as through curb inlet ports spaced at intervals along a road, or from a parking lot with frequent curb cuts. In general, no inlet port should carry more than about 10 percent of the flow.

A continuous inflow swale is not appropriate for a situation in which significant lateral flows enter a swale at some point downstream from the head of the swale. In this situation, the swale width and length must be recalculated from the point of confluence to the discharge point in order to provide adequate treatment for the increased flows.

Consult the water quality menus in Section 6.1 (p. 6-3) for information on how this facility may be used to meet Core Requirement #8.

6.3.3.1 METHODS OF ANALYSIS

DRAFT

The design flow for continuous inflow swales must include runoff from the pervious side slopes draining to the swale along the entire swale length.

The method of analysis for continuous inflow swales is the same as for basic biofiltration swales (see Section 6.3.1.1, p. 6-40) except for the following **clarification of Step 1** and **modification to Step 4**:

- **Step 1:** The WQ design flow may be variable to reflect the increase in flows along the swale length. If only a single design flow is used, the flow at the outlet shall be used.
- **Step 4:** Double the hydraulic residence time so that it is a minimum of 18 minutes (1,080 seconds). Equation (6-5) becomes:

$$L = 1080 V_{wq} \qquad (6\text{-}8)$$

where L = minimum allowable swale length (ft)
V_{wq} = design flow velocity calculated in Step 3 (fps).

Note: Although bottom widths may be increased to reduce length, bottom width cannot be reduced because Manning's depth-velocity-flow rate relationships would not be preserved.

6.3.3.2 DESIGN CRITERIA

Same as specified for **basic biofiltration swales** (in Section 6.3.1.2, p. 6-43) except for the following **modification:**

Planting Requirements, Criterion 4: For continuous inflow biofiltration swales, interior side slopes above the WQ design treatment elevation shall be planted in grass. A typical lawn seed mix or the biofiltration seed mixes are acceptable. Landscape plants or groundcovers other than grass shall not be used anywhere between the runoff inflow elevation and the bottom of the swale.

Intent: The use of grass on interior side slopes reduces the chance of soil erosion and transfer of pollutants from landscape areas to the biofiltration treatment area.

6.3.4 BASIC FILTER STRIPS

A *filter strip* is a grassy slope located adjacent and parallel to an impervious area such as a parking lot, driveway, or roadway (see the filter strip detail in Figure 6.3.4.A on page 6-65). A filter strip is graded to maintain sheet flow of stormwater runoff over the entire width of the strip. A filter strip removes pollutants primarily by means of filtration by grass blades which enhance sedimentation, and the trapping and adhesion of pollutants to the grass and thatch. Pollutants can also be adsorbed by the underlying soil when infiltration occurs, but the extent of infiltration depends on the type of soil, the density of the grass, and the slope of the strip.

In this manual, design procedures are provided for two types of filter strip applications: (1) the basic filter strip that should typically apply to parking lots, driveways, and roads where sufficient space is available, and (2) a modified, narrow area filter strip for roadside applications with limited right-of-way space that constricts the filter strip sizing. The basic filter strip is covered in this section, and the narrow area filter strip is covered in Section 6.3.5.

Applications and Limitations

Filter strip design is based on the expectation that water will flow fairly evenly across the entire width and length of the strip area. Thus, paved areas without underground stormwater collection systems, gutters, or other runoff control features are good candidates for filter strips.

Filter strips are suitable for areas that meet the following conditions:

- Stormwater runoff from the area requiring treatment shall be uniformly distributed along the top of the entire filter strip. If stormwater runoff from the entire area cannot be spread evenly along the top of the filter strip, the filter strip shall be applied only to flows that can be uniformly distributed. A different stormwater treatment facility, such as a swale, should be used for areas of the ***project site*** with concentrated flow (for instance, at road intersections).
- The flowpath draining to the filter strip shall not exceed 150 feet. Runoff flows traveling greater distances tend to concentrate before entering the filter strip.
- The lateral slope of the drainage area contributing flows to the filter strip (parallel to the edge of pavement) shall be less than 2 percent. A stepped series of flow spreaders installed at the head of the strip could compensate for slightly steeper slopes (see "Flow Spreading and Energy Dissipation," p. 6-62).
- The longitudinal slope of the contributing drainage area (parallel to the direction of flow entering the filter strip) should be less than 5 percent. Contributing drainage areas with slopes steeper than 5 percent shall either use a different WQ facility or must provide energy dissipation and flow spreading mechanisms upslope of the upper edge of the filter strip.

A filter strip generally requires more land area than a biofiltration swale because the flow depth through the filter is shallower than through a swale. Although the space requirements may be greater, the filter strip is a viable water quality treatment option in locations where grassy slopes already exist, or where a slope can be incorporated easily into the landscape design for the ***project site***. Other limitations that shall be considered are listed below:

1. Filter strips are susceptible to short-circuiting via flow channelization because they rely on a large smoothly graded area. If rills, gullies, or channels occur in the filter strip area, inflows will travel too quickly through the filter strip, reducing contact time and pollutant removal performance. A filter strip slope with uneven grading perpendicular to the sheet flow path will develop flow channels over time. These problems can be overcome with careful ***site*** planning, good soil compaction, skillful grading, and periodic maintenance.

DRAFT

2. Filter strip areas shall not be used for material storage or any activities that could cause disturbance of the ground surface in a manner that could create or promote preferential flowpaths (rills or channels) in the filter strip.
3. Filter strips shall not be located in shaded areas, for filter strips require exposure to sunlight to ensure healthy grass growth.

Consult the water quality menus in Section 6.1 (p. 6-3) for information on how this facility may be used to meet Core Requirement # 8.

6.3.4.1 METHODS OF ANALYSIS

In this manual, *filter strip length* is defined as the length of the flowpath through the strip. Strip width is typically the same as the extent of pavement along the upstream edge of the strip. Thus, in sizing filter strips, the length is normally the dimension to be sized (see Figure 6.3.4.A below for definitions of terms).

FIGURE 6.3.4.A FILTER STRIP TERMINOLOGY

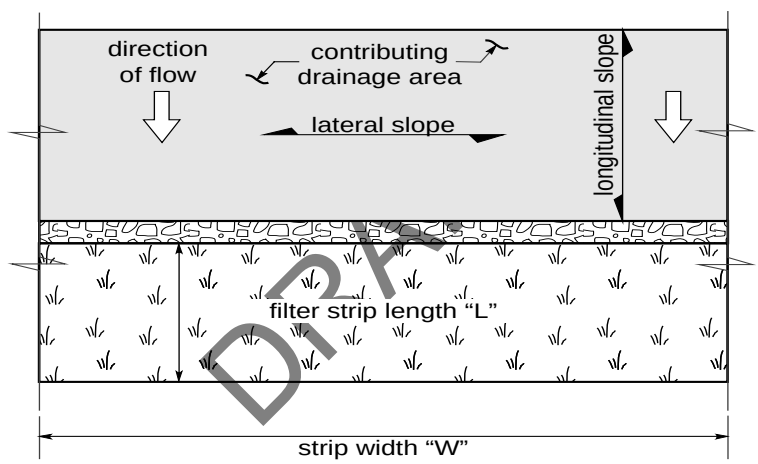

The procedure for filter strip design (described below) relies on Manning's equation to calculate some design variables. It is recognized that there are problems in this application.[18] The filter strip sizing method will be modified as new research results become available.

Filter strips sized and built using the method of analysis outlined below and the required design criteria presented in Section 6.3.4.2 are expected to meet the Basic Water Quality menu goal of 80% TSS removal.

Step 1: Calculate design flow. Determine the water quality design flow Q_{wq} (see Section 6.2.1, p. 6-17) using the hydrologic analysis procedures described in Chapter 3.

Step 2: Calculate design flow depth. The design flow depth is calculated based on the width of the filter strip (typically equivalent to the length of the edge of impervious surface contributing flow to the filter strip) and the longitudinal slope of the filter strip (parallel to the direction of flow) using a form of Manning's equation as follows:

[18] Ree, W.O., F.L. Wimberley, and F.R. Crow. 1977. Manning *n* and the overland flow equation. Transactions of the American Society of Agricultural Engineers 20 (89).

$$Q_{wq} = \frac{1.49}{n_{wq}} W d_f^{1.67} s^{0.5} \tag{6-9}$$

where Q_{wq} = water quality design flow (cfs)
n_{wq} = Manning's roughness coefficient (either 0.35 or 0.45; see the criteria under "Filter Strip Geometry and Flow Resistance," p. 6-62)
W = width of filter strip perpendicular to the direction of flow (ft) (≅ length of impervious surface contributing flow)
d_f = design depth of flow (ft), which is also assumed to be the hydraulic radius (maximum 1 inch, or 0.083 feet; see the criteria under "Water Depth and Velocity," p. 6-62)
s = longitudinal slope of filter strip parallel to the direction of flow (ft/ft) (averaged over the width of the filter strip; all portions averaged must also meet the slope design criteria).

Rearranging the above equation, the design depth of flow can be calculated using the following equation:

$$d_f = \left(\frac{Q_{wq} n_{wq}}{1.49 W s^{0.5}} \right)^{0.6} \tag{6-10}$$

If the calculated flow depth exceeds 1 inch (0.083 feet), the design flow rate routed through the strip must be reduced. If this is not feasible, it is not possible to use a filter strip.

Step 3: Calculate design flow velocity through filter strip. The design flow velocity V_{wq} is based on the water quality design flow rate, the width of the filter strip, and the calculated design flow depth from Step 2 using the following equation:

$$V_{wq} = \frac{Q_{wq}}{W d_f} \tag{6-11}$$

where V_{wq} = design flow velocity (fps)
W = strip width (ft) (parallel to the edge of pavement)
d_f = water depth (ft).

If V_{wq} exceeds 0.5 feet per second, a filter strip shall not be used. Either redesign the area to provide a gentler longitudinal slope for the strip, or select a different WQ facility.

Step 4: Calculate required length of filter strip. Determine the required length L of the filter strip to achieve a desired hydraulic residence time of at least 9 minutes (540 seconds) using the following equation:

$$L = 540 V_{wq} \tag{6-12}$$

where L = filter strip length (ft)
V_{wq} = design flow velocity from Step 3 (fps)

DRAFT

6.3.4.2 DESIGN CRITERIA

Figure 6.3.4.B (p. 6-65) shows typical filter strip details. The most effective filter strips achieve uniform sheet flow under all runoff flow conditions. To achieve proper flow conditions, the following basic design requirements apply.

Drainage Area Restrictions

1. The **longest flowpath** from the area contributing sheet flow to the filter strip shall not exceed 150 feet.
2. The **lateral slope of the contributing drainage** (parallel to the edge of pavement) shall be 2 percent or less.
3. A stepped series of **flow spreaders** installed at the head of the strip may be used to compensate for drainage areas having lateral slopes of up to 4 percent (see Section 6.2.6, p. 6-33, for information on flow spreader designs).
4. The **longitudinal slope of the contributing drainage area** (parallel to the direction of flow entering the filter strip) should be 5 percent or less.
5. Contributing drainage areas with longitudinal slopes steeper than 5 percent shall either use a different WQ facility or provide energy dissipation and flow spreading options upslope of the upper edge of the filter strip to achieve flow characteristics equivalent to those meeting the Criteria in items 2 and 4 above.

Filter Strip Geometry and Flow Resistance

1. The **longitudinal slope** of a filter strip (along the direction of flow) shall be between 1 percent minimum and 15 percent maximum.
2. The **lateral slope** of a strip (parallel to the edge of pavement, perpendicular to the direction of flow) shall be less than 2 percent.
3. The **ground surface** at the upper edge of a filter strip (adjacent to the contributing drainage area) shall be at least 1 inch lower than the edge of the impervious area contributing flows.
4. Manning's **roughness coefficient (n_{wq})** for flow depth calculations shall be 0.35. An exception to this requirement may be made for situations where the filter strip will be mowed weekly in the growing season to consistently provide a grass height of less than 4 inches; in this case, the value of n_{wq} in Equation (6-10) may be set to 0.45. *Note: In filter strip design, a larger* n *value results in a smaller strip size.*

Water Depth and Velocity

1. The **maximum depth** of flow through a filter strip for the WQ design flow shall be 1.0 inch.
2. The **maximum allowable flow velocity** for the water quality design flow V_{wq} shall be 0.5 feet per second.

Flow Spreading and Energy Dissipation

1. Runoff entering a filter strip must not be concentrated. A **flow spreader** shall be installed at the edge of the pavement to uniformly distribute the flow along the entire width of the filter strip.
2. At a minimum, a **gravel flow spreader** (gravel-filled trench) shall be placed between the impervious area contributing flows and the filter strip, and meet the following requirements:
   a) The gravel flow spreader shall be a minimum of 6 inches deep and shall be 18 inches wide for every 50 feet of contributing flowpath.

DRAFT

b) The gravel shall be a minimum of 1 inch below the pavement surface.

Intent: This allows sediment from the paved surface to be accommodated without blocking drainage onto the strip.

c) For strips less than 50 feet, the spreader width may be reduced to a minimum of 12 inches.

d) Where the ground surface is not level, the gravel spreader must be installed so that the bottom of the gravel trench and the outlet lip are level.

e) Along **roadways**, gravel flow spreaders must meet the specification for shoulder ballast given in Section 9-03.9(2) of the current WSDOT/APWA *Standard Specifications for Road, Bridge and Municipal Construction.* The ballast shall be compacted to 90 percent standard proctor.

Intent: This specification was chosen to meet traffic safety concerns as well as to limit fines to less than 2 percent passing the No.100 sieve.

3. Other flow spreaders (see Section 6.2.6, p. 6-33) may also be used. For filter strip applications, the notched curb spreader and through-curb port spreaders shall not be used without also adding a gravel spreader to better ensure that water sheet-flows onto the strip.

4. **Energy dissipaters** are needed in a filter strip if sudden slope drops occur, such as locations where flows in a filter strip pass over a rockery or retaining wall aligned perpendicular to the direction of flow. Adequate energy dissipation at the base of a drop section can be provided by a riprap pad (see Chapter 4, Table 4.2.2.A, for guidance).

Access

Access shall be provided at the **upper edge of a filter strip** to enable maintenance of the inflow spreader throughout the strip width and allow access for mowing equipment.

DRAFT

Soil Amendment

1. Two inches (minimum) of **well-rotted compost** shall be provided for the entire filter strip treatment area to amend the topsoil unless the soil already has an organic content of 1 percent or greater. The compost must be tilled into the underlying native soil to a depth of 6 inches to prevent washing out the compost and avoid creating a defined layer of different soil types that can prevent downward percolation of water.

   a) Compost shall not contain any sawdust, straw, green or under-composted organic matter, or toxic or otherwise harmful materials.

   b) Compost shall not contain unsterilized manure because it can leach fecal coliform bacteria into receiving waters.

2. **Soil or sod** with a clay content of greater than 10 percent should be avoided. If there is potential for contamination of the underlying groundwater, the filter strip shall be lined with a treatment liner to prevent groundwater contamination. See Section 6.2.4 (p. 6-23) for details on soil liner options.

Planting Requirements

1. **Grass** shall be established throughout the entire treatment area of the filter strip.

2. **Sod** may be used instead of grass seed as long as the entire filter strip area is completely covered with no gaps between sod pieces.

3. Filter strips are subject to drier conditions than biofiltration swales and also may be more vulnerable to erosion than swales. For these reasons, the following permanent **erosion-control grass seed mix** shall be applied at a rate of 80 pounds per acre in filter strips (percentages are by weight):

   40 percent turf-type rye

   40 percent fescue

10 percent white dutch clover

10 percent colonial bentgrass

4. **Alternate seed mixes** may be used if a horticultural or erosion-control specialist recommends a different mix and if erosion prevention is adequately addressed by other erosion-control measures.
5. Seed may be applied by **hydroseeding or broadcast application**.
6. **Seeding** is best performed in spring (mid-March to June) or fall (late September to October). If seed is applied in the spring or summer, irrigation must be provided to ensure grass survival.
7. Runoff shall be diverted around a filter strip until the grass is established, or an **erosion control blanket** shall be placed over the freshly applied seed mix. See *ESC Standards* (detached Appendix D) for information on erosion control blankets.

Recommended Design Features

Where conditions allow, the following features should be incorporated into a filter strip's design and its corresponding site configuration.

Site Layout and Landscaping

1. Filter strips should be incorporated into the **landscape design** of the ***site***; however, the treatment areas (i.e., grassy areas) should not be fertilized unless needed for healthy grass growth.
2. **Curbs** should be avoided, if possible, at the downslope edge of the contributing area. If curbing is needed, through-curb ports shall be provided (see Section 6.2.6, p. 6-33).
3. If **parking lot wheel stops** are necessary, individual wheel stops should have gaps for water to pass through. The shorter the wheel stops, the better for sheet flow purposes. See Section 6.2.6 (p. 6-33) for requirements.
4. During seeding, slow-release **fertilizers** may be applied to speed the growth of grass. If the filter strip is located in a sensitive lake watershed, low phosphorus fertilizers (such as formulations in the proportion 3:1:3 N-P-K or less) or a slow-release phosphorus formulation such as rock phosphate or bone meal should be used.
5. Filter strips should be well defined on a ***site*** and **marked with signs** to prevent future destruction or alteration of the treatment areas. Small at-grade signage is preferred.

DRAFT

Maintenance Features

1. **Irrigation** may be required in the summer months following initial filter strip construction to prevent the filter strip grass from wilting or dying. ***Site*** planning should address the need for sprinklers or other means of irrigation.
2. **Flatter slopes** are preferred for filter strips to make grass mowing easier.

Use with Oil Control Facilities

A project providing **oil control** (see the high-use definition in Chapter 1) may employ a filter strip for runoff treatment if a **linear sand filter** (see Section 6.5.4, p. 6-130) is used for oil control. In this situation, the sand filter should be designed so that flows exit the underdrain gravel along the whole length of the trench directly to the filter strip.

Construction Considerations

1. If a filter strip is put into operation before all construction in the contributing drainage catchment has been completed, the strip must be cleaned of sediment and reseeded prior to acceptance by the County. The County will not release financial guarantees if the filter strip is not restored and vigorous grass growth re-established.

2. It is preferable to provide erosion control before construction-phase sediment enters the filter strip. Filter strips are designed to handle only modest sediment loads without frequent maintenance.

Maintenance Considerations

Maintenance considerations, including mowing frequency and sediment removal, are similar to those for biofiltration swales (see page 6-50).

FIGURE 6.3.4.B TYPICAL FILTER STRIP DETAILS

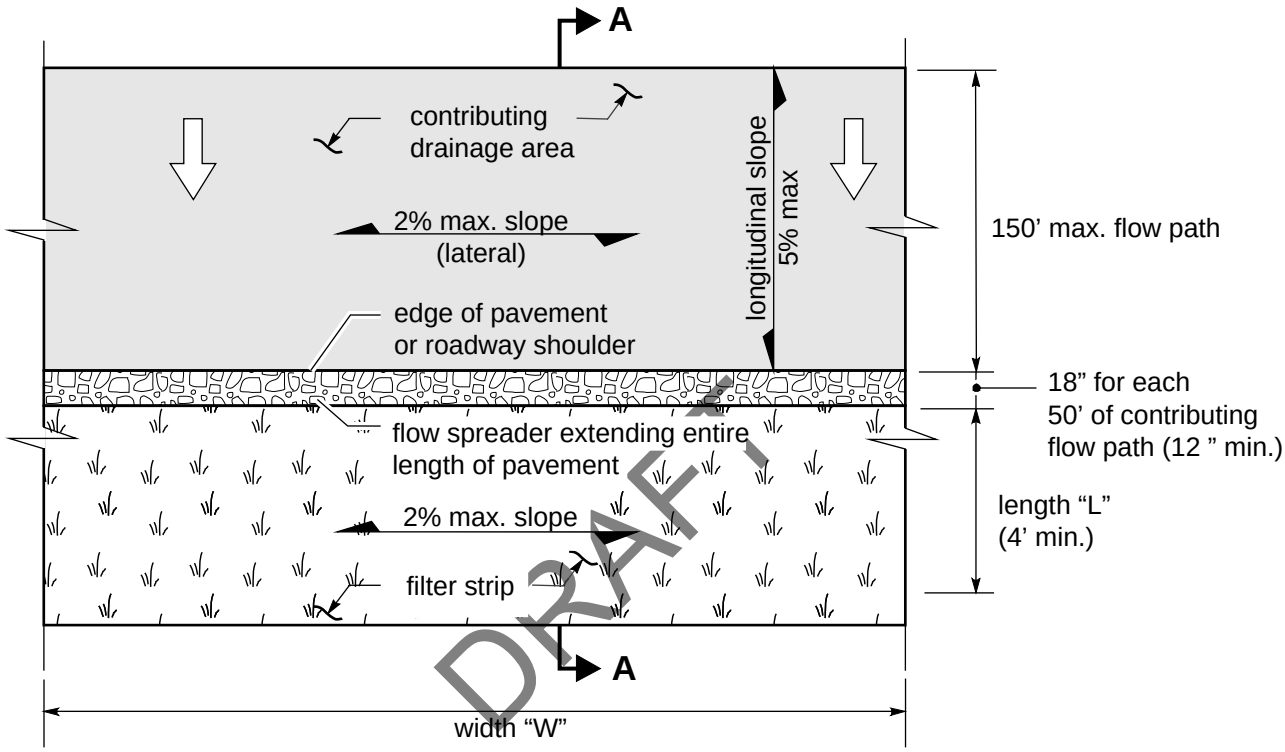

PLAN VIEW
NTS

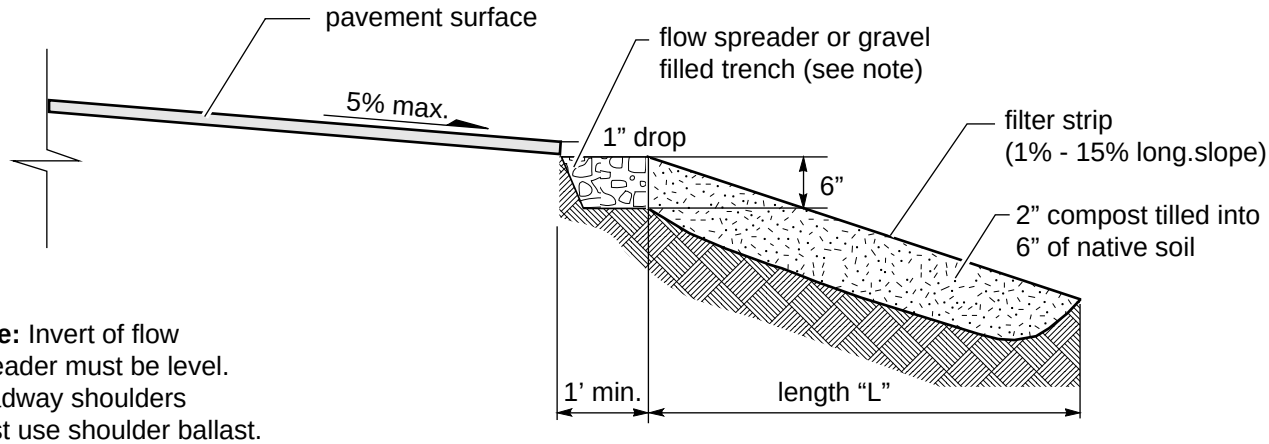

Note: Invert of flow spreader must be level. Roadway shoulders must use shoulder ballast.

SECTION A-A

DRAFT

6.3.5 NARROW AREA FILTER STRIPS

This section describes a filter strip design[19] for impervious areas with flowpaths of 30 feet or less that can drain along their widest dimension to grassy areas (see Figure 6.3.4.A, p. 6-60, for definitions of filter strip geometry terms).

The treatment objectives, applications and limitations, design criteria, materials specifications, and construction and maintenance requirements set forth in the basic filter strip design apply to narrow filter strip applications.

If space is available to use the basic filter strip design, that design shall be used in preference to the narrow filter strip. However, along roadways with limited right-of-way, or for narrow parking strips, the narrow strip may be used.

Consult the water quality menus in Section 6.1 (p. 6-3) for information on how this facility may be used to meet Core Requirement #8.

6.3.5.1 METHODS OF ANALYSIS

The sizing of a narrow area filter strip is based on the length of flowpath draining to the filter strip and the longitudinal slope of the filter strip itself (parallel to the flowpath).

Step 1: Determine length of flowpath draining to filter strip. Determine the length of the flowpath from the upstream to the downstream edge of the impervious area draining sheet flow to the strip. Normally this is the same as the width of the paved area, but if the area is sloped, the flow path may be longer than the width of the impervious area.

Step 2: Determine average longitudinal slope of filter strip. Calculate the longitudinal slope of the filter strip (along the direction of unconcentrated flow), averaged over the total width of the filter strip. The minimum sizing slope is 2 percent. If the slope is less than 2 percent, use 2 percent for sizing purposes. The maximum allowable filter strip slope is 20 percent. If the slope exceeds 20 percent, the filter strip must be stepped down the slope so that the treatment areas between drop sections do not have a longitudinal slope greater than 20 percent. Drop sections must be provided with erosion protection at the base and flow spreaders to re-spread flows. Vertical drops along the slope must not exceed 12 inches in height. If this is not possible, a different treatment facility must be selected.

Step 3: Determine required length of filter strip. Select the appropriate filter strip length for the flowpath length and filter strip longitudinal slope (Steps 1 and 2 above) **from the graph in Figure 6.3.5.A (p. 6-67)**.[20] The filter strip must be designed to provide this minimum length *L* along the entire stretch of pavement draining into it.

To use the graph: Find the **length of the flowpath** on one of the curves (interpolate between curves as necessary). Move along the curve to the point where the **design longitudinal slope** of the filter strip (x-axis) is directly below. Read the filter **strip length** on the y-axis that corresponds to the intersection point.

Example

If the length of flowpath through a parking strip is 20 feet and the filter strip will be at 5 percent longitudinal slope, move along the middle curve until it intercepts the 5 percent grid from the x-axis. The required filter strip length is 7 feet (read from the y-axis).

[19] This narrow area filter strip design method is included here because technical limitations exist in the basic design method that result in filter strips which are proportionately longer as the contributing drainage becomes narrower (a result that is counter-intuitive). Research by several parties is underway to evaluate filter strip design parameters. This research may lead to more stringent design requirements that would supersede the design criteria presented here.

[20] The filter strip length requirements reflected in Figure 6.3.5.A are scaled from dimensions of biofiltration swale treatment areas for the same slope and flow rate conditions.

DRAFT

FIGURE 6.3.5.A FILTER STRIP LENGTHS FOR NARROW RIGHT-OF-WAY

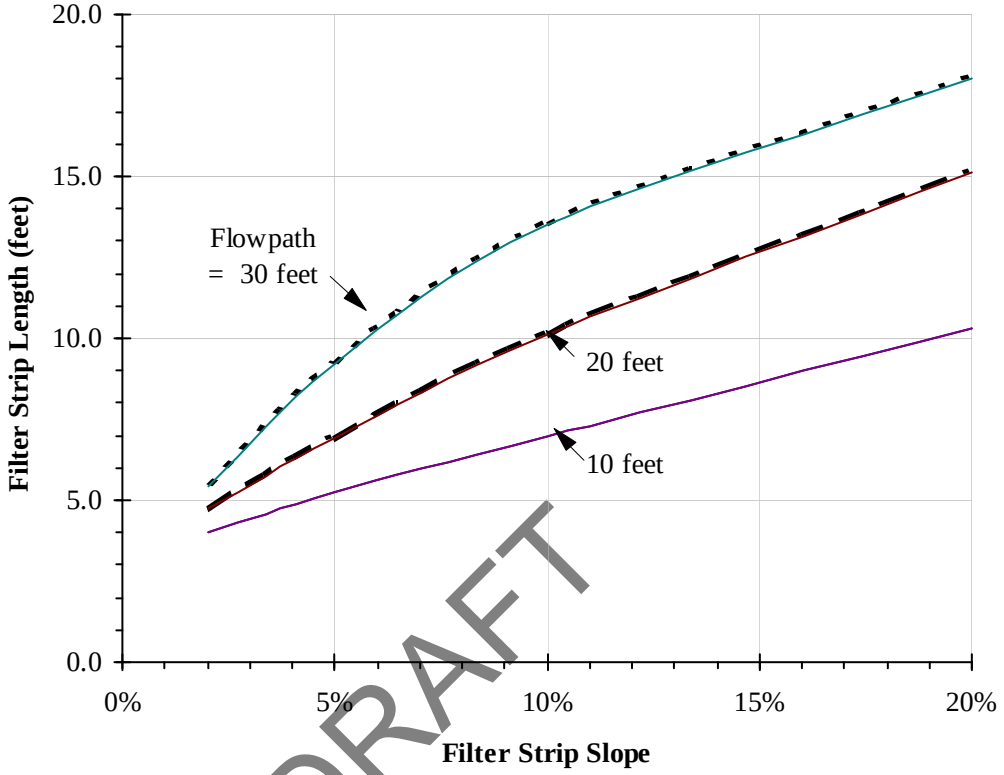

DRAFT

Note: minimum allowable filter strip length is 4 feet

6.3.5.2 DESIGN CRITERIA

Required and recommended design criteria for narrow area filter strips are the **same as specified for basic filter strips**. Note that for roadway applications, gravel spreaders must meet the specification for shoulder ballast given in Section 9-03.9(2) of the current *Standard Specifications for Road, Bridge and Municipal Construction*, 1994compacted to 90 percent standard proctor.

DRAFT

6.4 WETPOOL FACILITY DESIGNS

This section presents the methods, criteria, and details for analysis and design of wetponds, wetvaults, and stormwater wetlands. These facilities have as a common element a permanent pool of water, the *wetpool*. Each of the wetpool facilities may be combined with a detention or flow control pond in a combined facility. Included are the following specific facility designs:

- "Wetponds — Basic and Large," Section 6.4.1
- "Wetvaults," Section 6.4.2 (p. 6-83)
- "Stormwater Wetlands," Section 6.4.3 (p. 6-89)
- "Combined Detention and Wetpool Facilities," Section 6.4.4 (p. 6-95).

The information presented for each facility is organized into the following two categories:

1. **Methods of Analysis:** Contains a step-by-step procedure for designing and sizing each facility.
2. **Design Criteria:** Contains the details, specifications, and material requirements for each facility.

6.4.1 WETPONDS — BASIC AND LARGE

A *wetpond* is a constructed stormwater pond that retains a permanent pool of water (a "wetpool") at least during the wet season (see the wetpond detail in Figure 6.4.1.B on page 6-80). The volume of the wetpool is related to the effectiveness of the pond in settling particulate pollutants. The following design procedures, requirements, and recommendations cover two wetpond applications, the basic wetpond and the large wetpond. The two sizes are designed for two different levels of pollutant removal.

DRAFT

Applications and Limitations

A wetpond requires a larger area than a biofiltration swale or a sand filter, but it can be integrated to the contours of a ***site*** fairly easily. In till soils, the wetpond holds a permanent pool of water that provides an attractive aesthetic feature. In more porous soils, wetponds may still be used, but water seepage from unlined cells could result in a dry pond, particularly in the summer months. Lining with impervious material is one way to deal with this situation.

Wetponds may be single-purpose facilities, providing only water quality treatment, or they may be combined with a detention pond to also provide flow control. If combined, the wetpond can often be stacked under the detention pond with little further loss of development area. See Section 6.4.4 (p. 6-95) for a description of combined WQ and detention facilities.

Wetponds treat water both by gravity settling and by biological uptake of algae and microorganisms. Wetponds can remove some dissolved pollutants such as soluble phosphorus by this uptake mechanism. They are therefore used in the Sensitive Lake Protection menu for phosphorus control in addition to the Basic WQ menu for solids removal. Wetponds work best when the water already in the pond is moved out *en masse* by incoming flows, a phenomena called *plug flow*. Because treatment works on this displacement principle, the dead storage pool of wetponds may be provided below the groundwater level without interfering unduly with treatment effectiveness. However, if combined with a detention function, the live storage must be above the seasonal high groundwater level.

Consult the water quality menus in Section 6.1 (p. 6-3) for information on how basic and large wetponds may be used to meet Core Requirement #8.

6.4.1.1 METHODS OF ANALYSIS

This section describes methods of analysis for the following two wetpond sizes:

- **Basic wetpond** (see below)
- **Large wetpond** (see page 6-73).

❑ BASIC WETPOND

The primary design factor that determines a wetpond's **particulate removal efficiency** is the volume of the wetpool in relation to the volume of stormwater runoff from the *mean annual storm*.[21] The larger the wetpond volume in relation to the volume of runoff, the greater the potential for pollutant removal. Also important are the avoidance of short-circuiting and the promotion of plug flow. *Plug flow* describes the hypothetical condition of stormwater moving through the pond as a unit, displacing the "old" water in the pond with incoming flows. To prevent short-circuiting, water is forced to flow, to the extent practical, to all potentially available flow routes, avoiding "dead zones" and maximizing the time water stays in the pond during the active part of a storm.

Design features that encourage plug flow and avoid dead zones are as follows:

- Dissipating energy at the inlet
- Providing a large length-to-width ratio
- Providing a broad surface for water exchange across cells rather than a constricted area.

Maximizing the flowpath between inlet and outlet, including the vertical path, also enhances treatment by increasing residence time.

Wetponds designed using the method below (with the volume = $3V_r$) and the required design criteria in Section 6.6.2.2 are expected to meet the Basic WQ menu goal of 80% TSS removal. The actual performance of a wetpond may vary, however, due to a number of factors, including design features, maintenance frequency, storm characteristics, pond algae dynamics, and waterfowl use.

Procedures for determining a wetpond's dimensions and volume are outlined below.

Step 1: Identify required wetpool volume factor (*f*). A basic wetpond requires a volume factor of **3**. This means that the required wetpond volume is 3 times the volume of runoff V_r from the mean annual storm (see Steps 2 and 3).

Step 2: Determine rainfall (*R*) for the mean annual storm. The rainfall for the mean annual storm R is obtained by locating the ***project site*** on Figure 6.4.1.A (p. 6-71) and interpolating between isopluvials. Convert to feet for use in Equation (6-13).

Step 3: Calculate runoff from the mean annual storm (V_r) for the developed *site*. The runoff volume V_r is the amount of rainfall that runs off a particular set of land covers. To determine V_r, each portion of the wetpond tributary area is assigned to one of four cover types, each having a different runoff coefficient: impervious surface, till grass, till forest, or outwash.

- **Impervious surface** is a compacted surface, such as pavement, gravel, soil, or other hard surfaces, as well as open water bodies. *Note: The effective impervious computations given in Chapter 3, Table 3.2.2.E may be used, unless more detailed information is available.*

- **Till grass** is post-development grass or landscaped area and onsite forested land on till soil that are not permanently in critical area buffers or covenants. *Till* is soil that does not drain readily and, as a

[21] The *mean annual storm* is a statistically derived rainfall event defined by the U.S. Environmental Protection Agency in "Results of the Nationwide Urban Runoff Program," 1986. It is defined as the annual rainfall divided by the number of storm events in the year. The NURP studies refer to pond sizing using a V_b/V_r ratio: the ratio of the pond volume V_b to the volume of runoff from the mean annual storm V_r. This is equivalent to using a volume factor f times V_r.

DRAFT

FIGURE 6.4.1.A PRECIPITATION FOR MEAN ANNUAL STORM IN INCHES (FEET)

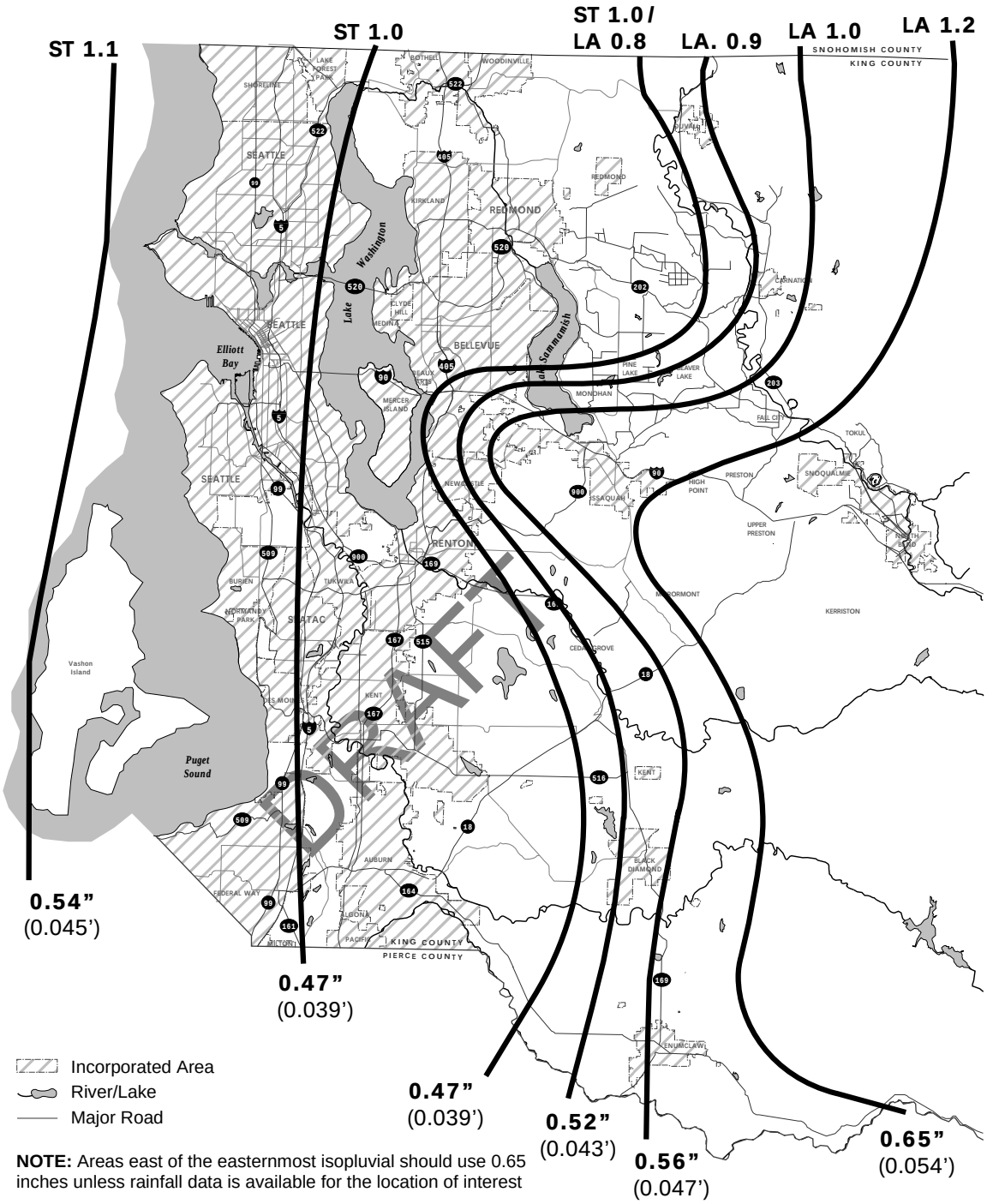

[24] The mean annual storm is a conceptual storm found by dividing the annual precipitation by the total number of storm events per year

result, generates large amounts of runoff. For this application, till soil types include Buckley and bedrock soils, and alluvial and outwash soils that have a seasonally high water table or are underlain at a shallow depth (less than 5 feet) by glacial till. U.S. Soil Conservation Service (SCS) hydrologic soil groups that are classified as till soils include a few B, most C, and all D soils. See Chapter 3 for classification of specific SCS soil types.

- **Till forest** is all permanent onsite forest and/or shrub cover, located on till soils, that retains the natural understory vegetation and forest duff, irrespective of age, if densities are sufficient to ensure at least 80 percent canopy cover within 5 years. To be counted in this category, forest must be protected as permanent open space. Such areas shall be placed in a separate open space tract or shall be protected through covenants or conservation easements. Section 5.2.1 has a brief discussion of forested open space under the heading "Rural Residential Projects."
- **Outwash** is soil that infiltrates well and as a result produces small amounts of runoff. SCS hydrologic soil groups classified as outwash soils include all A, most B, and some C soils. See Chapter 3 for classification of specific SCS soil types.

Cover categories are based on existing U.S. Department of Agriculture soil survey data or ***site***-specific data where available.

Next, coefficients specific to the four cover types are weighted by the drainage areas and then multiplied by the rainfall R from Step 2 to produce the runoff volume V_r:

$$V_r = (0.9A_i + 0.25A_{tg} + 0.10A_{tf} + 0.01A_o) \text{ x } (R) \qquad (6\text{-}13)$$

where V_r = volume of runoff from mean annual storm (cf)
A_i = area of impervious surface (sf)
A_{tg} = area of till soil covered with grass (sf)
A_{tf} = area of till soil covered with forest (sf)
A_o = area of outwash soil covered with grass or forest (sf)
R = rainfall from mean annual storm (ft)

Step 4: Calculate wetpool volume (V_b). Use the results of the previous steps to calculate the required wetpool volume according to the following equation:

$$V_b = f\,V_r \qquad (6\text{-}14)$$

where V_b = wetpool volume (cf)
f = volume factor from Step 1
V_r = runoff volume (cf) from Step 3

Step 5: Determine wetpool dimensions. Determine the wetpool dimensions satisfying the design criteria outlined below. A simple way to check the volume of each wetpool cell is to use the following equation:

$$V_b = \frac{h(A_1 + A_2)}{2} \qquad (6\text{-}15)$$

where V_b = wetpool volume (cf)
h = wetpool depth (ft)
A_1 = water quality design surface area of wetpool (sf)
A_2 = bottom area of wetpool (sf)

Step 6: Design pond outlet pipe and determine primary overflow water surface. The design criteria for wetponds (see Section 6.4.1.2) calls for a pond outlet pipe to be placed on a reverse grade from the pond's wetpool to the outlet structure. Use the following procedure to design the pond outlet pipe and determine the primary overflow water surface elevation:

a) Use the nomographs in Section 4.3 (Figures 4.3.1.B and 4.3.1.C) to select a trial size for the pond outlet pipe sufficient to pass the WQ design flow Q_{wq}.

b) Use Figure 4.3.1.F to determine the critical depth d_c at the outflow end of the pipe for Q_{wq}.

DRAFT

c) Use Figure 4.2.1.G to determine the flow area A_c at critical depth.

d) Calculate the flow velocity at critical depth using continuity equation ($V_c = Q_{wq} / A_c$).

e) Calculate the velocity head V_H ($V_H = V_c^2 / 2g$), where g is the gravitational constant, 32.2 feet per second).

f) Determine the primary overflow water surface elevation by adding the velocity head and critical depth to the invert elevation at the outflow end of the pond outlet pipe (i.e., overflow water surface elevation = outflow invert + d_c + V_H)

g) Adjust outlet pipe diameter as needed and repeat Steps (a) through (e).

❑ LARGE WETPOND

Large wetponds are expected to meet the Sensitive Lake Protection menu goal of 50% total phosphorus removal. The actual performance of a wetpond may vary, however, due to a number of factors. The methods of analysis presented above for basic wetponds apply to large wetponds, except that **Step 1 is modified** as follows:

Step 1: A large wetpond requires a volume factor of 4.5.

6.4.1.2 DESIGN CRITERIA

This section sets forth design criteria for the following:

- **Basic wetpond** (see below)
- **Large wetpond** (see page 6-79).

General wetpond design criteria and concepts are shown in Figure 6.4.1.B (p. 6-80).

DRAFT

❑ BASIC WETPOND

Wetpool Geometry

1. The wetpool shall be divided into **two cells** separated by a baffle or berm.[22] The first cell shall contain between 25 to 35 percent of the total wetpool volume. The baffle or berm volume shall not count as part of the total wetpool volume.

   Intent: The full-length berm or baffle promotes plug flow and enhances quiescence and laminar flow through as much of the entire water volume as possible. Use of a pipe and full-width manifold system to introduce water into the second cell is possible on a case-by-case basis if approved by DDES.

2. Wetponds with wetpool volumes less than or equal to 4,000 cubic feet may be **single celled** (i.e., no baffle or berm is required).

3. **Sediment storage** shall be provided in the first cell. The sediment storage shall have a minimum depth of 1 foot.

4. The **minimum depth of the first cell** shall be 4 feet, exclusive of sediment storage requirements. The depth of the first cell may be greater than the depth of the second cell. If the wetpool is a single cell, the volume equivalent to the first cell shall have a minimum depth of 4 feet.

5. The **maximum depth of each cell** shall not exceed 8 feet (exclusive of sediment storage in the first cell). Pool depths of 3 feet or shallower (second cell) shall be planted with emergent wetland vegetation (see **Planting requirements**).

[22] As used here, the term *baffle* means a vertical divider placed across the entire width of the pond, stopping short of the pond bottom. A berm is a vertical divider typically built up from the bottom, or if in a vault, connects all the way to the bottom.

6. Inlets and outlets shall be placed to maximize the flowpath through the facility. The **ratio of flowpath length to width** from the inlet to the outlet shall be at least 3:1. The *flowpath length* is defined as the distance from the inlet to the outlet, as measured at mid-depth. The *width* at mid-depth can be found as follows: width = (average top width + average bottom width)/2.

7. All inlets shall enter the first cell. If there are multiple inlets, the length-to-width ratio shall be based on the average flowpath length for all inlets.

Berms, Baffles, and Slopes

1. A berm or baffle shall extend across the full width of the wetpool, and tie into the wetpond side slopes. If the berm embankments are greater than 4 feet in height, the berm **must be constructed by excavating a key** equal to 50% of the embankment cross-sectional height and width. This requirement may be waived if recommended by a geotechnical engineer for specific ***site*** conditions.[23]

2. The **top of the berm shall extend** to the **WQ design water surface** or be one foot below the WQ design water surface. If at the WQ design water surface, berm side slopes must be 3H:1V. Berm side slopes may be steeper (up to 2:1) if the berm is submerged one foot.

   Intent: Submerging the berm is intended to enhance safety by discouraging pedestrian access when side slopes are steeper than 3H:1V.

3. If good vegetation cover is not established on the berm, **erosion control measures** shall be used to prevent erosion of the berm back-slope when the pond is initially filled.

4. The interior berm or baffle may be a **retaining wall** provided that the design is prepared and stamped by a ***civil engineer***. If a baffle or retaining wall is used, it shall be submerged one foot below the design water surface to discourage access by pedestrians.

5. Criteria for wetpond **side slopes** and **fencing** are given under "General Requirements for WQ Facilities," Section 6.2.3 (p. 6-21).

6. Berm **embankments** shall be the same as for detention ponds (see Section 5.3.1).

7. **Internal berms** to lengthen the flow path or allow the inlet and outlet to be at the same side of the pond may be used if an **adjustment** is granted. An adjustment may be granted only if **physical *site* constraints** prevent the standard configuration and design features promote water quality treatment. Required design features to approve an adjustment include minimizing dead spaces, minimizing turbulence, and promoting plug flow. Internal berms must extend to the 2-year water elevation, a minimum of 10 feet must be between the berms, and a distance equal to the width between the internal berms must be provided between the internal berm and the pond side at the point that the flow turns around the berm.

DRAFT

Inlet and Outlet

See Figure 6.4.1.B (p. 6-80) for details on the following requirements:

1. The **inlet** to the wetpond shall be **submerged** with the inlet pipe invert a minimum of two feet from the pond bottom (not including sediment storage). The top of the inlet pipe shall be submerged at least 1 foot.

   Intent: The inlet is submerged to dissipate energy of the incoming flow. The distance from the bottom is set to minimize resuspension of settled sediments. Alternative inlet designs that accomplish these objectives are acceptable.

2. An **outlet structure** shall be provided. Either a Type 2 catch basin with a grated opening (jail house window) or a manhole with a cone grate (birdcage) may be used (see Section 5.3.1.1). No sump is

[23] The geotechnical analysis must address situations in which one of the two cells is empty while the other remains full of water. These situations can occur, for example, during pump down of either cell for sediment removal, or when water from the second unlined cell percolates into the ground.

required in the outlet structure for wetponds not providing detention storage. The outlet structure receives flow from the pond outlet pipe. The grate or birdcage openings provide an overflow route should the pond outlet pipe become clogged. Criterion 5 below specifies the sizing and position of the grate opening.

3. The **pond outlet pipe** (as opposed to the structure outlet) shall be back-sloped or have a turn-down elbow, and extend 1 foot below the WQ design water surface. *Note: A floating outlet, set to draw water from 1 foot below the water surface, is also acceptable if vandalism concerns are adequately addressed.* **Intent:** The inverted outlet pipe provides for trapping of oils and floatables in the wetpond.

4. The **pond outlet pipe** shall be sized, at a minimum, to pass the WQ design flow. *Note: The highest invert of the outlet pipe sets the **WQ design water surface** elevation.*

~~7.~~5. The **overflow** criteria for single-purpose wetponds are as follows:

   a) The requirement for **primary overflow** as described for flow control ponds is satisfied by either the **grated inlet** to the outlet structure or by a **birdcage** above the pond outlet structure as shown in Figure 5.3.1.C.

   b) The bottom of the grate opening in the outlet structure shall be set at or above the height needed to pass the WQ design flow through the pond outlet pipe (see page 6-72 for sizing details). *Note: The grate invert elevation sets the **overflow water surface** elevation.*

   c) In flow-through ponds, the grated opening shall be sized to pass the 100-year design flow.

6. An **emergency spillway** shall be provided and designed according to the requirements for detention ponds (see Section 5.3.1).

7. A **gravity drain** for maintenance shall be provided if grade allows.

   a) The **drain invert** shall be at least 6 inches below the top elevation of the dividing berm or baffle. Deeper drains are encouraged where feasible, but must be no deeper than 18 inches above the pond bottom.

      Intent: to prevent highly sediment-laden water from escaping the pond when drained for maintenance.

   b) The drain shall be at least 8 inches (minimum) diameter and shall be controlled by a valve. Use of a shear gate is allowed only at the inlet end of a pipe located within an approved structure.

      Intent: Shear gates often leak if water pressure pushes on the side of the gate opposite the seal. The gate should be situated so that water pressure pushes toward the seal.

   Intent: It is anticipated that sediment removal will only be needed for the first cell in the majority of cases. The gravity drain is intended to allow water from the first cell to be drained to the second cell when the first cell is pumped dry for cleaning.

8. Operational access to the valve shall be provided to the finished ground surface.

   a) The valve location shall be accessible and well-marked with one foot of paving placed around the box. It must also be protected from damage and unauthorized operation.

   b) A valve box is allowed to a maximum depth of 5 feet without an access manhole. If over 5 feet deep, an access manhole or vault is required.

9. All metal parts shall be corrosion-resistant. Galvanized materials are discouraged where substitutes are available.

DRAFT

Access and Setbacks

1. The location of the pond relative to ***site*** constraints (e.g., buildings, property lines, etc.) shall be the same as for detention ponds (see Section 5.3.1). See Section 6.2.3 (p. 6-21) for typical setback requirements for WQ facilities.
2. Access and maintenance **roads** shall be provided and designed according to the requirements for detention ponds (see Section 5.3.1). Access and maintenance roads shall extend to both the wetpond inlet and outlet structures. An access ramp (7H minimum:1V) shall be provided to the bottom of the first cell unless all portions of the cell can be reached and sediment loaded from the top of the pond. Also see Section 5.3.1, "Access Requirements" for more information on access alternatives.
3. If the **dividing berm** is also **used for access**, it must be built to sustain loads of up to 80,000 pounds.

Signage

1. General signage shall be provided according to the requirements for detention ponds (see Section 5.3.1).
2. Signage discouraging feeding of waterfowl is required. The sign entitled "Four reasons not to feed ducks and geese" is available to download from the King County Water and Land Resources Division *Surface Water Design Manual* website. This sign, or other approved equivalent sign, shall be placed for maximum visibility from adjacent streets, sidewalks, and paths. Specifications for installing the sign are shown in Figure 6.4.1.C (p. 6-82).

Planting Requirements

1. Planting requirements for detention ponds (see Section 5.3.1.1) also apply to wetponds.

   If the second cell of the wetpond is 3 feet or shallower, the bottom area shall be planted with emergent wetland vegetation. See Table 6.4.1.A (p. 6-77) for recommended emergent wetland plant species for wetponds. **Intent:** Planting of shallow pond areas helps to stabilize settled sediment and prevent resuspension.

   Note: The recommendations in Table 6.4.1.A *are for western Washington only. Local knowledge should be used to adapt this information if used in other areas.*
2. Cattails (*Typha latifolia*) are not recommended because they tend to crowd out other species, and the dead shoots need to be removed to prevent oxygen depletion in the wetpool.
3. If the wetpond is in a sensitive lake or sphagnum bog protection area, shrubs that form a dense cover shall be planted on slopes above the WQ design water surface on at least three sides. For banks that are berms, no planting is allowed if the berm is regulated by dam safety requirements (see Section 5.3.1). The purpose of planting is to discourage waterfowl use of the pond and to provide shading.[24] Some suitable trees and shrubs include vine maple (*Acer circinatum*), wild cherry (*Prunus emarginata*), red osier dogwood (*Cornus stolonifera*), California myrtle (*Myrica californica*), Indian plum (*Oemleria cerasiformis*), and Pacific yew (*Taxus brevifolia*) as well as numerous ornamental species.

Recommended Design Features

The following design features should be incorporated into the wetpond design where ***site*** conditions allow:

1. For wetpool depths in excess of 6 feet, it is recommended that some form of **recirculation** be provided in the summer, such as a fountain or aerator, to prevent stagnation and low dissolved oxygen conditions. A special use permit is needed for a pump or fountain in a County maintained pond.

[24] Waterfowl are believed to limit use of areas where their view of predator approach paths is blocked. Some suitable native shrubs include vine maple, Indian plum, bitter cherry, red osier dogwood, cascara, and red elderberry. Ornamental hedge plants such as English laurel, privet and barberry are also good choices.

DRAFT

2. A flow length-to-width ratio greater than the 3:1 minimum is desirable. If the ratio is 4:1 or greater, then the **dividing berm is not required**, and the pond may consist of one cell rather than two.

TABLE 6.4.1.A EMERGENT WETLAND PLANT SPECIES RECOMMENDED FOR WETPONDS

Species	Common Name	Notes	Maximum Depth
INUNDATION TO 1 FOOT			
Agrostis exarata(1)	Spike bent grass	Prairie to coast	to 2 feet
Carex stipata	Sawbeak sedge	Wet ground	
Eleocharis palustris	Spike rush	Margins of ponds, wet meadows	to 2 feet
Glyceria occidentalis	Western mannagrass	Marshes, pond margins	to 2 feet
Juncus effusus	Soft rush	Wet meadows, pastures, wetland margins	to 2 feet
Juncus tenuis	Slender rush	Wet soils, wetland margins	
Oenanthe sarmentosa	Water parsley	Shallow water along stream and pond margins; needs saturated soils all summer	
Scirpus atrocinctus (formerly S. cyperinus)	Woolgrass	Tolerates shallow water; tall clumps	
Scirpus microcarpus	Small-fruited bulrush	Wet ground to 18 inches depth	18 inches
Sagittaria latifolia	Arrowhead		
INUNDATION 1 TO 2 FEET			
Agrostis exarata(1)	Spike bent grass	Prairie to coast	
Alisma plantago-aquatica	Water plantain		
Eleocharis palustris	Spike rush	Margins of ponds, wet meadows	
Glyceria occidentalis	Western mannagrass	Marshes, pond margins	
Juncus effusus	Soft rush	Wet meadows, pastures, wetland margins	
Scirpus microcarpus	Small-fruited bulrush	Wet ground to 18 inches depth	18 inches
Sparganium emmersum	Bur reed	Shallow standing water, saturated soils	
INUNDATION 1 TO 3 FEET			
Carex obnupta	Slough sedge	Wet ground or standing water	1.5 to 3 feet
Beckmania syzigachne(1)	Western sloughgrass	Wet prairie to pond margins	
Scirpus acutus(2)	Hardstem bulrush	Single tall stems, not clumping	to 3 feet
Scirpus validus(2)	Softstem bulrush		
INUNDATION GREATER THAN 3 FEET			
Nuphar polysepalum	Spatterdock	Deep water	3 to 7.5 feet
Nymphaea odorata(1)	White waterlily	Shallow to deep ponds	to 6 feet

Notes:

(1) Non-native species. *Beckmania syzigachne* is native to Oregon. Native species are preferred.

(2) *Scirpus* tubers must be planted shallower for establishment, and protected from foraging waterfowl until established. Emerging aerial stems should project above water surface to allow oxygen transport to the roots.

Primary sources: Municipality of Metropolitan Seattle, *Water Pollution Control Aspects of Aquatic Plants*, 1990. Hortus Northwest, *Wetland Plants for Western Oregon*, Issue 2, 1991. Hitchcock and Cronquist, *Flora of the Pacific*

DRAFT

Northwest, 1973.

3. A **tear-drop shape**, with the inlet at the narrow end, rather than a rectangular pond is preferred since it minimizes dead zones caused by corners.
4. A small amount of **base flow** is desirable to maintain circulation and reduce the potential for low oxygen conditions during late summer.
5. Evergreen or columnar deciduous **trees along the west and south sides** of ponds are recommended to reduce thermal heating, except that no trees or shrubs shall be planted on berms meeting the criteria of dams regulated for safety (see Dam Safety Compliance in Section 5.3.1). In addition to shade, trees and shrubs also discourage waterfowl use and the attendant phosphorus enrichment problems they cause. Trees should be set back so that the branches will not extend over the pond.

   Intent: Evergreen trees or shrubs are preferred to avoid problems associated with leaf drop. Columnar deciduous trees (e.g., hornbeam, Lombardy poplar, etc.) typically have fewer leaves than other deciduous trees.
6. The **number of inlets** to the facility should be limited; ideally there should be only one inlet. The flowpath length should be maximized from inlet to outlet for all inlets to the facility.
7. The **access and maintenance road** could be extended along the full length of the wetpond and could double as playcourts or picnic areas. Placing finely ground bark or other natural material over the road surface would render it more pedestrian friendly.

~~9.~~8. **Stormwater tracts** may be credited to meet recreational space requirements under some circumstances (criteria in KCC 21A.14.180.D) or may sometimes be located in open space set aside through the four to one program. See Section 5.3.1.1 for details.

~~10.~~9. The following design features should be incorporated to **enhance aesthetics** where possible:

a) Provide pedestrian access to shallow pool areas enhanced with emergent wetland vegetation. This allows the pond to be more accessible without incurring safety risks.

b) Provide side slopes that are sufficiently gentle to avoid the need for fencing (3:1 or flatter).

c) Create flat areas overlooking or adjoining the pond for picnic tables or seating that can be used by residents. Walking or jogging trails around the pond are easily integrated into ***site*** design.

d) Include fountains or integrated waterfall features for privately maintained facilities.

e) Provide visual enhancement with clusters of trees and shrubs. In most pond areas, it is important to amend the soil before planting since ponds are typically placed well below the native soil horizon in very poor soils. Make sure dam safety restrictions against planting do not apply.

f) Orient the pond length along the direction of prevailing summer winds (typically west or southwest) to enhance wind mixing.[25]

Construction Considerations

1. Sediment that has accumulated in the pond must be removed after construction in the drainage area of the pond is complete (unless used for a liner—see Criteria 2 below). If no more than 12 inches of sediment have accumulated after plat construction, cleaning may be left until after building construction is complete. In general, sediment accumulation from stabilized drainage areas is not expected to exceed an average of 4 inches per year in the first cell. If sediment accumulation is greater than this amount, it will be assumed to be from construction unless it can be shown otherwise.

[25] Wind moving over the surface of standing water can often induce some mixing of surface and near-surface water, replenishing oxygen and reducing stagnant conditions. If the pond is aligned with the prevailing wind direction, this effect can be maximized.

DRAFT

The County will not release maintenance and defect financial guarantees or assume maintenance responsibility for a facility unless it has been cleaned of construction phase sediments.

2. Sediment that has accumulated in the pond at the end of construction may be used as a liner in excessively drained soils if the sediment meets the criteria for low permeability or treatment liners defined in Section 6.2.4 (p. 6-23) and in keeping with guidance given in Table 6.2.4.A (p. 6-25). Sediment used for a soil liner must be graded to provide uniform coverage and thickness.

Maintenance Considerations

1. The pond should be inspected annually. Floating debris and accumulated petroleum products should be removed as needed, but at least annually.
2. Nearby vegetation should be trimmed as necessary to keep the pond free of leaves and to maintain the aesthetic appearance of the area. Slope areas that have become bare should be revegetated and eroded areas should be regraded prior to being revegetated.
3. Sediment should be removed when the 1-foot sediment zone is full plus 6 inches. Sediments should be tested for toxicants in compliance with current disposal requirements if land uses in the catchment include commercial or industrial zones, or if visual or olfactory indications of pollution are noticed.
4. Water drained or pumped from ponds prior to sediment removal may be discharged to storm drains if it is not excessively turbid (i.e., if water appears translucent when held to light) and if floatable debris and visual petroleum sheens are removed. Excessively turbid water (i.e., water appears opaque when held to light) should be discharged only after the solids have been settled and removed.
5. Pumping rates should be slow enough so that downstream channel erosion problems do not develop.

DRAFT

❑ LARGE WETPOND

All design criteria for **basic wetponds** shall apply to large wetponds, with the following **modifications:**

1. The wetpool for a large wetpond shall have a volume factor of 4.5.
2. If the project is subject to the Sensitive Lake Protection menu or the Sphagnum Bog Protection menu, the following shall apply:

   a) Shrubs that form a dense cover shall be planted along the top of the wetpond bank on cut slopes. **Planting** is recommended for bermed slopes, except for berms meeting the criteria of dams regulated for safety (see Dam Safety Compliance in Section 5.3.1). Evergreen trees and shrubs are preferred.

      Intent: Trees and shrubs discourage waterfowl use. Waterfowl tend to avoid areas that are not visually open.

   b) Measures to enhance **waterfowl habitat value** (e.g., nesting structures) are not allowed.

   c) **Signage** discouraging feeding of waterfowl is required. The sign entitled "Four reasons not to feed ducks and geese" is available to download from the King County Water and Land Resources Division *Surface Water Design Manual* website. This sign, or other approved equivalent sign, shall be placed for maximum visibility from adjacent streets, sidewalks, and paths. Specifications for installing the sign are shown in Figure 6.4.1.C (p. 6-82).

3. **Recommended Design Features:** If joint use of the facility is planned, public fishing or water contact access should be limited to the second cell since the first cell functions to collect and concentrate sediment and attached pollutants.

FIGURE 6.4.1.B WETPOND

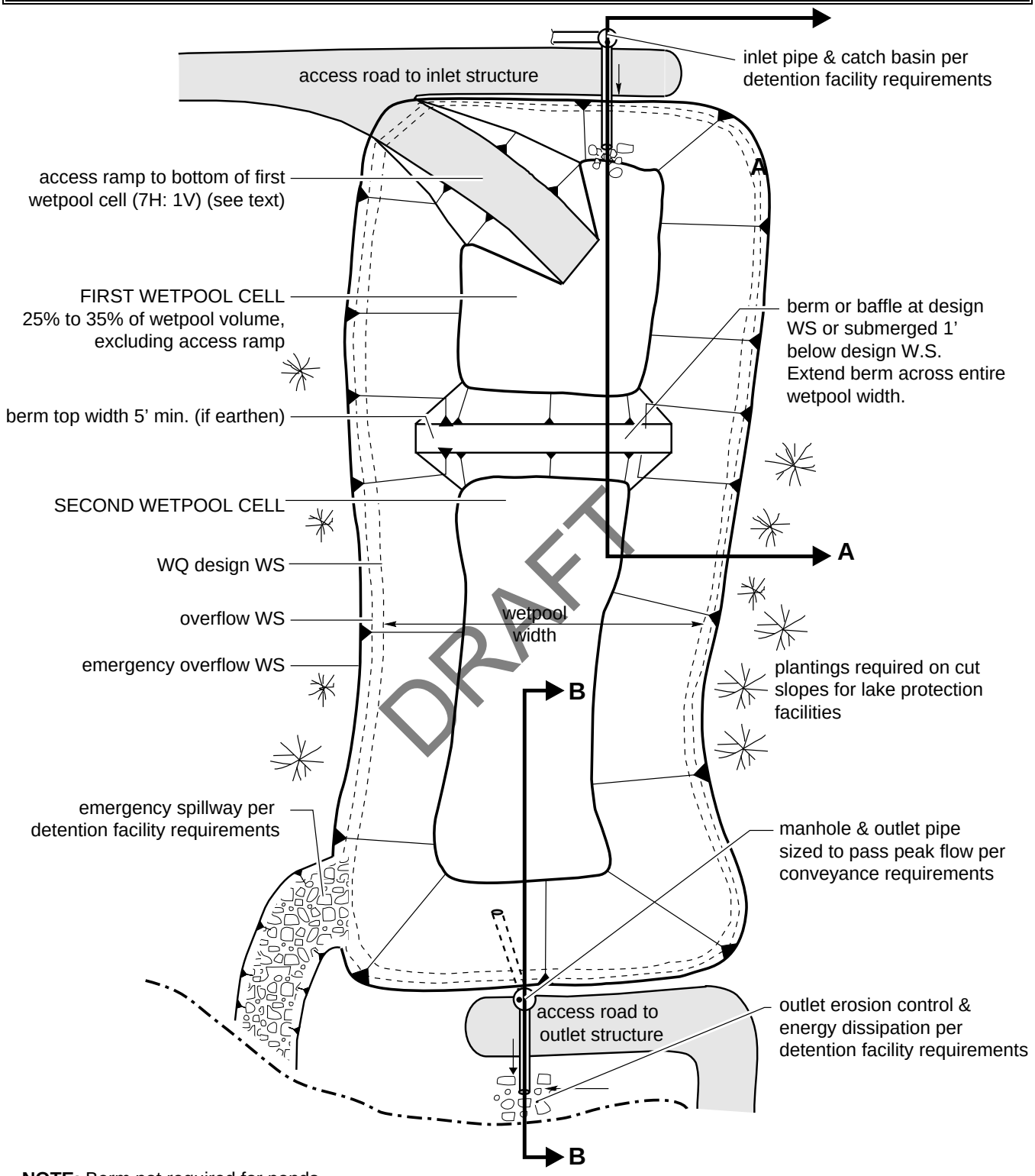

NOTE: Berm not required for ponds with length to width ratio 4:1 or if volume less than 4000 c.f.

PLAN VIEW
NTS

FIGURE 6.4.1.B WETPOND (*CONTINUED*)

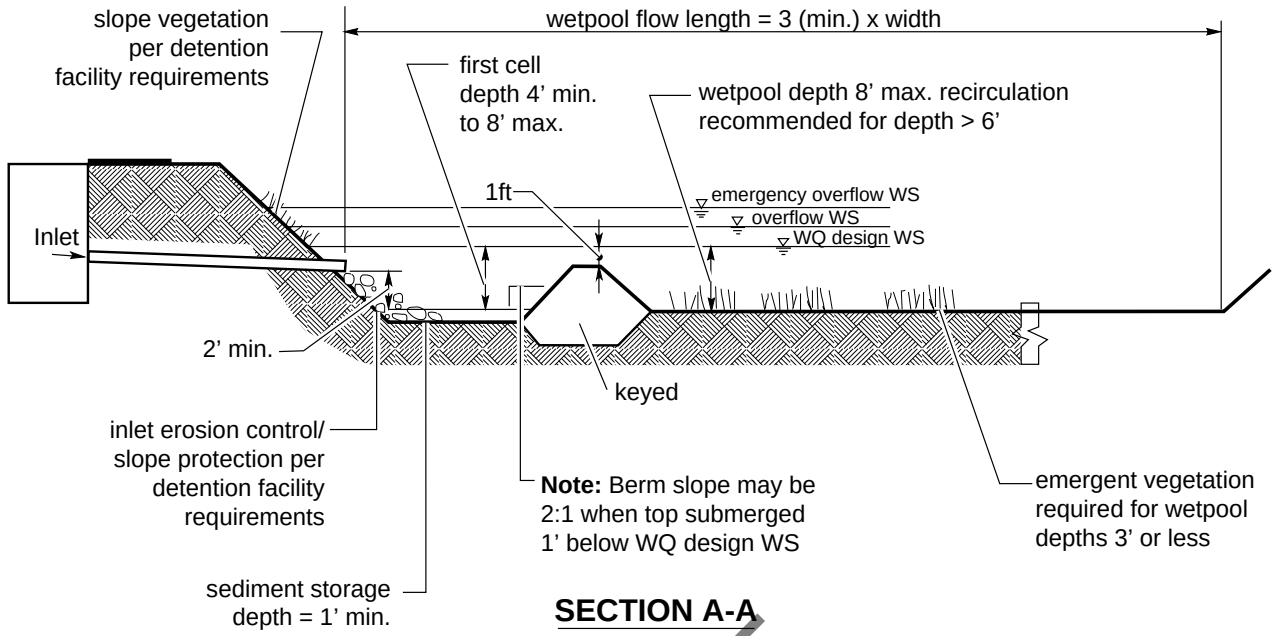

SECTION A-A
NTS

DRAFT

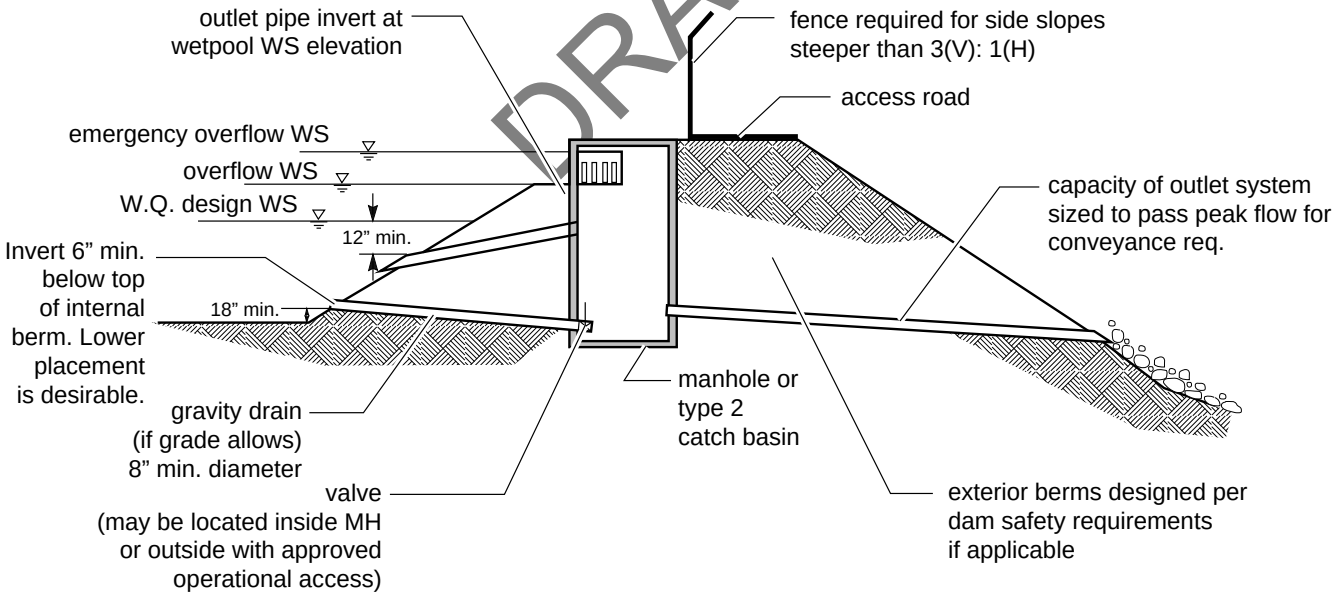

SECTION B-B
NTS

NOTE: See detention facility requirements for location and setback requirements.

FIGURE 6.4.1.C WATERFOWL SIGNAGE

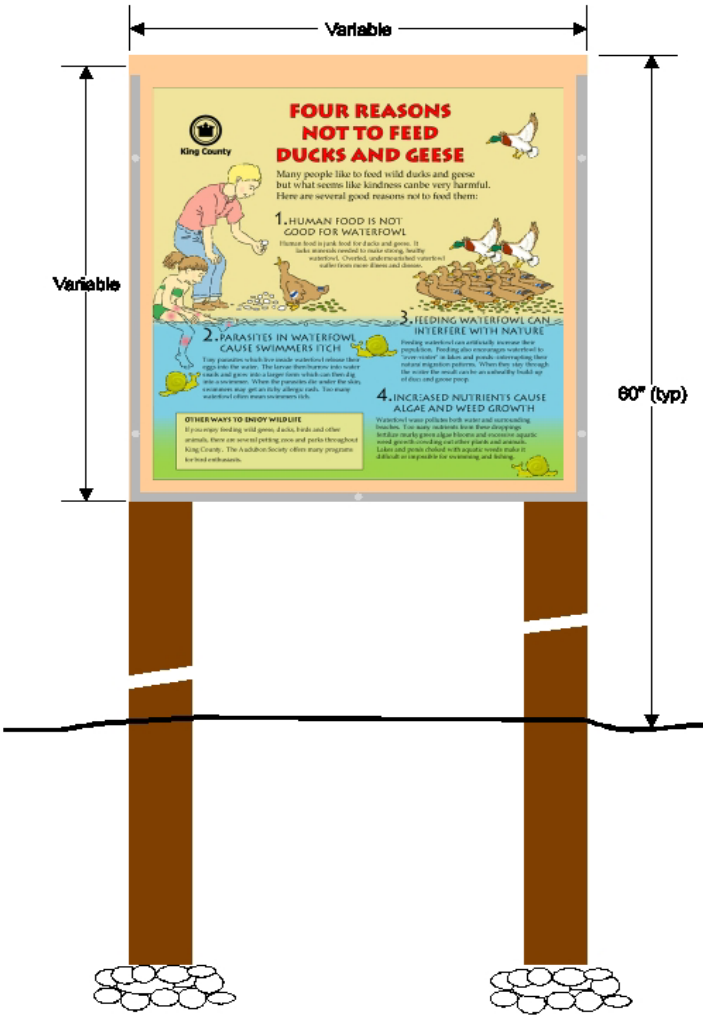

Specifications:

Size:	Variable. Minimum 2' x 2'
Substrate:	½" MDO plywood, primed and finish coated in Beige enamel.
Face:	Digital print on 3M Control Tack material with a UV overlay.
Graffiti Protection:	$^{1}/_{8}$" Lexan panel covered in 3M 2980 Protective Overlay, then mounted to substrate with anti-reversing screws.
Posts:	Pressure treated 4" x 4" posts.
Installation:	Mount digital print centered both directions to a beige substrate 2" larger in both directions than print. Secure substrate to 4" x 4" post with four to six - 2½" wood screws depending on size, ½" on center from edge of plywood. Attach double sided automotive tape to both edges and bottom edge of the plywood covering the wood screws then attach the Lexan panel with the protective overlay facing outward. Additional secure the Lexan with 2 to 3 anti-reversible screws down each side centered in the automotive tape and one centered in the bottom. Attach a plywood cap the same length as the substrate and six inches wide with 2½" wood screws centered over the posts and sign.

6.4.2 WETVAULTS

A *wetvault* is an underground structure similar in appearance to a detention vault, except that a wetvault has a permanent pool of water that dissipates energy and improves the settling of particulate pollutants (see the wetvault details, Figure 6.4.2.A, on page 6-88). Being underground, the wetvault lacks the biological pollutant removal mechanisms, such as algae uptake, present in surface wetponds.

Applications and Limitations

A wetvault may be used in any type or size of development. However, it is most practical in relatively small catchments (less than 10 acres of impervious surface) with high land values because vaults are relatively expensive. Combined detention and wetvaults are allowed; see Section 6.4.4 (p. 6-95).

A wetvault is believed to be ineffective in removing dissolved pollutants such as soluble phosphorus or metals such as copper. There is also concern that oxygen levels will decline, especially in warm summer months, because of limited contact with air and wind. However, the extent to which this potential problem occurs has not been documented.

If oil control is required for a project, the wetvault may be combined with the **baffle oil/water separator** facility (see Section 6.6.2, p. 6-145) to fulfill Special Requirement #5, "Oil Control" (see Option 5, Section 6.1.5, p. 6-14). *Consult the water quality menus in Section 6.1 (p. 6-3) for information on how this facility may be used to meet Core Requirement #8 and Special Requirement #5.*

6.4.2.1 METHODS OF ANALYSIS

DRAFT

As with wetponds, the primary design factor that determines the removal efficiency of a wetvault is the volume of the wetpool in relationship to the volume of runoff (***V_r***.) from the mean annual storm[26]. The larger the volume, the higher the potential for pollutant removal. Performance is also improved by avoiding dead zones (like corners) where little exchange occurs, using large length-to-width ratios, dissipating energy at the inlet, and ensuring that flow rates are uniform to the extent possible and not increased between cells.

Wetvaults sized using the design methodology below (with a volume of $3V_r$) and following the required design criteria in Section 6.4.2.2 are expected to meet the Basic WQ menu goal of 80% TSS removal.

The methods of analysis for the wetvault are **identical to the methods of analysis for the wetpond**. Follow the procedure specified in Section 6.4.1.1 (p. 6-70) to determine the wetpool volume for the wetvault.

6.4.2.2 DESIGN CRITERIA

Typical design details and concepts for the wetvault are shown in Figure 6.4.2.A (p. 6-88).

Wetpool Geometry

Same as specified for **wetponds** (see Section 6.4.1.2, p. 6-73) except for the following **two modifications:**

1. **Criterion 3:** The **sediment storage** in the first cell shall be an average of 1 foot. Because of the v-shaped bottom, the depth of sediment storage needed above the bottom of the side wall is roughly proportional to vault width according to the schedule below:

[26] U.S. Environmental Protection Agency, *Results of the Nationwide Urban Runoff Program*, 1986.

Vault Width	Sediment Depth (from bottom of side wall)
15'	10"
20'	9"
40'	6"
60'	4"

2. **Criterion 5:** The second cell shall be a minimum of 3 feet deep since planting cannot be used to prevent resuspension of sediment in shallow water as it can in open ponds.

Vault Structure

1. Wetvaults shall be designed as flow-through systems.
2. The vault shall be separated into two cells by a **wall** or a **removable baffle**.[27] If a **wall or non-removable baffle** is used, a 5-foot by 10-foot removable maintenance access must be provided for both cells. If a removable baffle is used, the following criteria apply:
   a) The baffle shall extend from a minimum of 1-foot above the WQ design water surface to a minimum of 1 foot below the invert elevation of the inlet pipe.
   b) The lowest point of the baffle shall be a minimum of 2 feet from the bottom of the vault, and greater if feasible.
3. If the vault is less than 2,000 cubic feet (inside dimensions) or if the length-to-width ratio of the vault pool is 5:1 or greater, the **baffle or wall** may be omitted and the vault may be one-celled.
4. The two cells of a wetvault shall not be divided into additional subcells by **internal walls**. If internal structural support is needed, post and pier construction may be used to support the vault lid rather than walls. Any walls used within cells must be positioned so as to lengthen, rather than divide, the flowpath.

   Intent: Treatment effectiveness in wetpool facilities is related to the extent to which plug flow is achieved and short-circuiting and dead zones are avoided. Structural walls placed within the cells can interfere with plug flow and create significant dead zones, reducing treatment effectiveness.
5. Internal walls to lengthen the flow path or allow the inlet and outlet to be at the same side of the vault may be used if an **adjustment** is granted. An adjustment may be granted only if **physical *site* constraints** prevent the standard configuration and design features promote water quality treatment. Required design features to approve an adjustment include minimizing dead spaces, minimizing turbulence, and promoting plug flow. Internal walls must extend to the 2-year water elevation, a minimum of 10 feet must be between the walls, and a distance equal to the width between the internal walls must be provided between the internal wall and the vault wall at the point that the flow turns around the wall. All vault requirements apply to each length/segment.

   Intent: Confined movement around the internal walls creates turbulence, creates dead zones and decreases treatment effectiveness.
6. The bottom of the first cell shall be sloped toward the access opening. Slope shall be between 0.5 percent (minimum) and 2 percent (maximum). The second cell may be level (longitudinally) sloped toward the outlet, with a high point between the first and second cells.
7. The **vault bottom** shall slope laterally a minimum of 5% from each side towards the center, forming a broad "v" to facilitate sediment removal. *Note: More than one "v" may be used to minimize vault depth.*

DRAFT

[27] As used here, the term *baffle* means a divider that does not extend all the way to the bottom of the vault, or if a bottom baffle, does not extend all the way to the top of the water surface. A *wall* is used here to mean a divider that extends all the way from near the water surface to the bottom of the vault.

Exception: The vault bottom may be flat if **removable panels** are provided over the entire vault. Removable panels shall be at grade, have stainless steel lifting eyes, and weigh no more than 5 tons per panel.

8. The highest point of a **vault bottom** must be at least 6 inches below the outlet elevation to provide for sediment storage over the entire bottom.
9. Provision for passage of flows should the outlet plug shall be provided.
10. Wetvaults may be constructed using **arch culvert sections** provided the top area at the WQ design water surface is, at a minimum, equal to that of a vault with vertical walls designed with an average depth of 6 feet. If arched culverts are used, the manufacturer must certify that they are water-tight.

    Intent: To prevent decreasing the surface area available for oxygen exchange.
11. Wetvaults shall conform to the **"Materials"** and **"Structural Stability"** criteria specified for **detention vaults** in Section 5.3.3.
12. Where pipes enter and leave the vault below the WQ design water surface, they shall be **sealed** using a non-porous, non-shrinking grout.

Inlet and Outlet

1. The **inlet** to the wetvault shall be submerged with the inlet pipe invert a minimum of 3 feet from the vault bottom (not including sediment storage). The top of the inlet pipe shall be submerged at least 1 foot. *Note: These dimensional requirements may increase the minimum 4 foot depth of the first cell, depending on the size of the inlet pipe.*

   Intent: The submerged inlet is to dissipate energy of the incoming flow. The distance from the bottom is to minimize resuspension of settled sediments. Alternative inlet designs that accomplish these objectives are acceptable.
2. Unless designed as an off-line facility, the capacity of the **outlet pipe** and available head above the outlet pipe shall be designed to convey the 100-year design flow for developed ***site*** conditions (as described in Section 5.3.4.2) without overtopping the vault. The available head above the outlet pipe must be a minimum of 6 inches.
3. The outlet pipe shall be back-sloped or have tee section, the lower arm of which shall extend 1 foot below the WQ design water surface to provide for trapping of oils and floatables in the vault.
4. A **gravity drain** for maintenance shall be provided if grade allows.

   a) The gravity drain should be as low as the ***site*** situation allows; however, the **invert** shall be no lower than the average sediment storage depth. At a minimum, the invert shall be 6 inches above the base elevation of the vault side walls.

      Intent: This placement prevents highly sediment-laden water from escaping when the vault is drained for maintenance. A lower placement is allowed than for wetponds since the v-shaped vault bottom will capture and retain additional sediments.

   b) The drain shall be 8 inches (minimum) diameter and shall be controlled by a valve. Use of a shear gate is allowed only at the inlet end of a pipe located within an approved structure.

      Intent: Shear gates often leak if water pressure pushes on the side of the gate opposite the seal. The gate should be situated so that water pressure pushes toward the seal.

   c) Operational access to the valve shall be provided to the finished ground surface. The valve location shall be accessible and well marked with one foot of paving placed around the box. It must also be protected from damage and unauthorized operation.

   d) If not located in the vault, a valve box is allowed to a maximum depth of 5 feet without an access manhole. If over 5 feet deep, an access manhole is required.

DRAFT

Access Requirements

Same as for detention vaults (see Section 5.3.3) except for the following additional requirement for wetvaults:

> A minimum of 50 square feet of **grate** shall be provided over the second cell. For vaults in which the surface area of the second cell is greater than 1,250 square feet, 4% of the total surface area shall be grated. This requirement may be met by one grate or by many smaller grates distributed over the second cell area. If the vault is a single cell, ventilation shall be provided over the second half of the vault. *Note: a grated access door may be used to meet this requirement.*
>
> **Intent:** The grate allows air contact with the wetpool in order to minimize stagnant conditions that can result in oxygen depletion, especially in warm weather.

Access Roads, Right of Way, and Setbacks

Same as for detention vaults (see Section 5.3.3).

Recommended Design Features

The following design features should be incorporated into wetvaults where feasible, but they are not specifically required:

1. The floor of the second cell should slope toward the outlet for ease of cleaning.
2. The **inlet and outlet** should be at opposing corners of the vault to increase the flowpath.
3. A **flow length-to-width** ratio greater than 3:1 minimum is desirable.
4. **Lockable grates** instead of solid manhole covers are recommended to increase air contact with the wetpool.
5. **Galvanized materials** should be avoided whenever possible.
6. The **number of inlets** to the wetvault should be limited, and the flowpath length should be maximized from inlet to outlet for all inlets to the vault.

DRAFT

Construction Considerations

Sediment that has accumulated in the vault must be removed after construction in the drainage area is complete. If no more than 12 inches of sediment have accumulated after the infrastructure is built, cleaning may be left until after building construction is complete. In general, sediment accumulation from stabilized drainage areas is not expected to exceed an average of 4 inches per year in the first cell. If sediment accumulation is greater than this amount, it will be assumed to be from construction unless it can be shown otherwise. The County will not release maintenance and defect financial guarantees or assume maintenance responsibility for a facility unless it has been cleaned of construction phase sediments.

Maintenance Considerations

1. Accumulated sediment and stagnant conditions may cause noxious gases to form and accumulate in the vault.
2. Facilities should be inspected annually. Floating debris and accumulated petroleum products shall be removed as needed, but at least annually. The floating oil shall be removed from wetvaults used as oil/water separators when oil accumulation exceeds one inch.
3. Sediment should be removed when the 1-foot (average) sediment zone is full thus 6 inches. Sediments should be tested for toxicants in compliance with current disposal requirements if land uses in the catchment include commercial or industrial zones, or if visual or olfactory indications of pollution are noticed.

4. Water drained or pumped from the vault prior to removing accumulated sediments may be discharged to storm drains if it is not excessively turbid (i.e., if water appears translucent when held to light) and if all floatable debris and visual petroleum sheens are removed. Excessively turbid water (i.e., water appears opaque when held to light) should be discharged only after the settleable solids have been removed.

❑ MODIFICATIONS FOR COMBINING WITH A BAFFLE OIL/WATER SEPARATOR

If the ***project site*** is a ***high-use site*** and a wetvault is proposed to meet the Basic WQ menu criteria, the vault may be combined with a baffle oil/water separator (see Section 6.6.2) to meet the requirements of Special Requirement #5 with one facility rather than two. Structural modifications and added design criteria are given below. However, the maintenance requirements for baffle oil/water separators must be adhered to, in addition to those for a wetvault. This will result in more frequent inspection and cleaning than for a wetvault used only for TSS removal. See page 6-154 for information on maintenance of baffle oil/water separators.

1. The sizing procedures for the baffle oil/water separator (p. 6-146) should be run as a check to ensure the vault is large enough. If the oil/water separator sizing procedures result in a larger vault size, increase the wetvault size to match.
2. An **oil retaining baffle** shall be provided in the second cell near the vault outlet. The baffle should not contain a high-flow overflow, or else the retained oil will be washed out of the vault during large storms.
3. The vault shall have a minimum **length-to-width ratio** of 5:1.
4. The vault shall have a design water **depth-to-width** ratio of between 1:3 to 1:2.
5. The vault shall be **watertight** and shall be coated to protect from corrosion.
6. Separator vaults shall have a **shutoff mechanism** on the outlet pipe to prevent oil discharges during maintenance and to provide emergency shut-off capability in case of a spill. A valve box and riser shall also be provided.
7. Wetvaults used as oil/water separators must be **off-line** and must bypass flows greater than the WQ design flow.

   Intent: This design minimizes the entrainment and/or emulsification of previously captured oil during very high flow events.

DRAFT

FIGURE 6.4.2.A WETVAULT

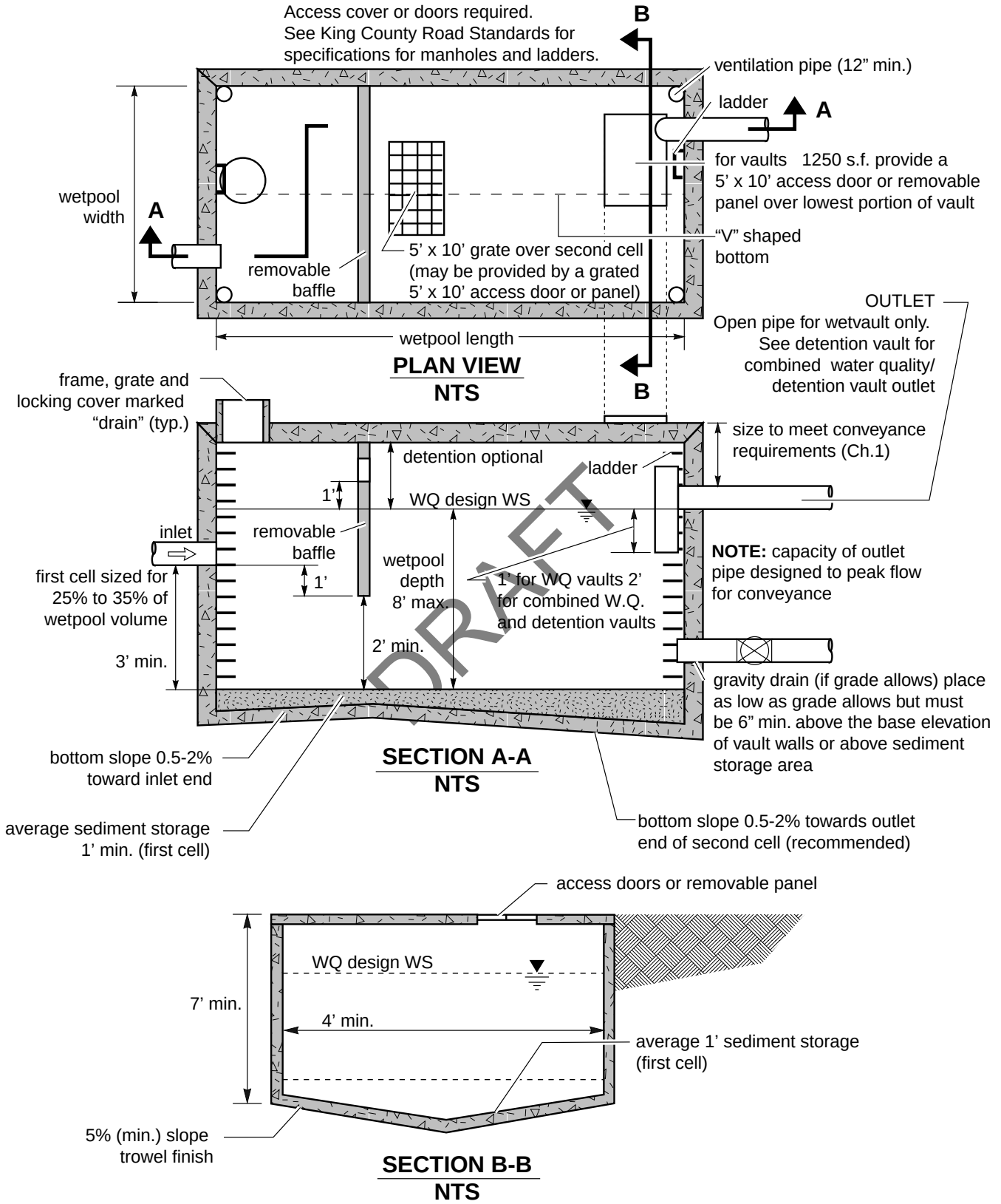

6.4.3 STORMWATER WETLANDS

In land development situations, wetlands are usually constructed for two main reasons: to replace or mitigate impacts when natural wetlands are filled or impacted by development (mitigation wetlands), and to treat stormwater runoff (stormwater treatment wetlands). *Stormwater wetlands* are shallow man-made ponds that are designed to treat stormwater through the biological processes associated with emergent aquatic plants (see the stormwater wetland details in Figure 6.4.3.A, p. 6-93, and Figure 6.4.3.B, p. 6-94).

In King County, wetlands created to mitigate disturbance impacts, such as filling, shall not also be used as stormwater treatment facilities. This is because of the different, incompatible functions of the two kinds of wetlands. **Mitigation wetlands** are intended to function as full replacement habitat for fish and wildlife, providing the same functions and harboring the same species diversity and biotic richness as the wetlands they replace. **Stormwater treatment wetlands** are used to capture and transform pollutants, just as wetponds are, and over time the sediment will concentrate pollutants. This is not a healthy environment for aquatic life. Stormwater treatment wetlands are used to capture pollutants in a managed environment **so that they will not reach natural wetlands** and other ecologically important habitats. In addition, vegetation must be harvested and sediment dredged in stormwater treatment wetlands, further interfering with use for wildlife habitat.

In general, stormwater wetlands perform well to remove sediment, metals, and pollutants which bind to humic or organic acids. Phosphorus removal in stormwater wetlands is highly variable.[28]

Applications and Limitations

This stormwater wetland design occupies about the same surface area as wetponds, but has the potential to be better integrated aesthetically into a ***site*** because of the abundance of emergent aquatic vegetation. The most critical factor for a successful design is the provision of an **adequate supply of water** for most of the year. Careful planning is needed to be sure sufficient water will be retained to sustain good wetland plant growth. Since water depths are shallower than in wetponds, water loss by evaporation is an important concern. Stormwater wetlands are a good WQ facility choice in areas with **high winter groundwater levels**.

Consult the water quality menus in Section 6.1 (p. 6-3) for information on how this facility may be used to meet Core Requirement #8.

DRAFT

6.4.3.1 METHODS OF ANALYSIS

When used for stormwater treatment, stormwater wetlands employ some of the same design features as wetponds. However, instead of gravity settling being the dominant treatment process, pollutant removal mediated by aquatic vegetation and the microbiological community associated with that vegetation becomes the dominant treatment process. Thus when designing wetlands, water volume is not the dominant design criteria. Rather, factors which affect plant vigor and biomass are the primary concerns.

Stormwater wetlands designed and constructed using the criteria below are expected to meet the Basic WQ menu goal of 80% TSS removal and the Enhanced Basic WQ menu goal of 50% total zinc removal.

Steps 1 through 5: Determine the volume of a basic wetpond. Follow Steps 1 through 5 for wetponds (see Section 6.4.1.1, p. 6-70). The volume of a basic wetpond is used as a template for sizing the stormwater wetland.

Step 6: Calculate the surface area of the stormwater wetland. The surface area of the wetland shall be the same as the top area of a wetpond sized for the same ***site*** conditions. Calculate the surface area of the stormwater wetland by using the volume from Step 5 and dividing by the average water depth (use 3 feet).

[28] Richardson, C. 1987. "Mechanisms controlling phosphorus retention capacity in freshwater wetlands," *Science*, 228: 1424.

Step 7: Determine the surface area of the first cell of the stormwater wetland. Use the volume determined from Criterion 2 under "Wetland Geometry" (p. 6-90), and the actual depth of cell 1.

Step 8: Determine the surface area of the wetland cell. Subtract the surface area of the first cell (Step 7) from the total surface area (Step 6).

Step 9: Determine water depth distribution in the second cell. Decide if the top of the dividing berm will be at the surface or submerged (designer's choice). Adjust the distribution of water depths in the second cell according to Criterion 8 under "Wetland Geometry" below. *Note: This will result in a facility that holds less volume than that determined in Step 5 above. This is acceptable.*

Intent: The surface area of the stormwater wetland is set to be roughly equivalent to that of a wetpond designed for the same ***project site*** so as not to discourage use of this option.

Step 10: Choose plants. See Table 6.4.1.A (p. 6-77) for a list of plants recommended for wetpond water depth zones, or consult a wetland scientist.

6.4.3.2 DESIGN CRITERIA

Typical details for a **stormwater wetland** are shown in Figure 6.4.3.A (p. 6-93) and Figure 6.4.3.B (p. 6-94).

Wetland Geometry

1. Stormwater wetlands shall consist of two cells, a presettling cell and a wetland cell.
2. The **presettling cell** shall contain a volume equal to the volume of runoff from the mean annual storm (V_r). This is approximately 33 percent of the wetpool volume calculated in Step 5 of "Methods of Analysis," Section 6.4.3.1.
3. The **depth of the presettling cell** shall be between 4 feet (minimum) and 8 feet (maximum).
4. One foot of **sediment storage** shall be provided in the presettling cell.
5. The **wetland cell** shall have an average **water depth** of about 1.5 feet (plus or minus 3 inches).
6. The **"berm"** separating the two cells shall be shaped such that its downstream side gradually slopes to form the second shallow wetland cell (see the section view in Figure 6.4.3.A, p. 6-93). Alternatively, the second cell may be graded naturalistically from the top of the dividing berm (see Criterion 8 below).
7. The **top of berm** shall be either at the WQ design water surface or submerged 1 foot below the WQ design water surface, as with wetponds. Correspondingly, the **side slopes** of the berm must meet the following criteria:
   a) If the top of berm is at the WQ design water surface, the berm side slopes shall be no steeper than 3H:1V.
   b) If the top of berm is submerged 1 foot, the upstream side slope may be up to 2H:1V.[29]
8. Two options (A and B) are provided for **grading the bottom of the wetland cell**. Option A is a shallow, evenly graded slope from the upstream to the downstream edge of the wetland cell (see Figure 6.4.3.A, p. 6-93). Option B is a "naturalistic" alternative, with the specified range of depths intermixed throughout the second cell (see Figure 6.4.3.B, p. 6-94). A **distribution of depths** shall be provided in the wetland cell depending on whether the dividing berm is at the water surface or submerged (see Table 6.4.3.A, below). The maximum depth is 2.5 feet in either configuration.

DRAFT

[29] If the berm is at the water surface, then for safety reasons, its slope must be no greater than 3:1, just as the pond banks must be 3:1 if the pond is not fenced. A steeper slope (2:1 rather than 3:1) is allowed if the berm is submerged in 1 foot of water. If submerged, the berm it is not considered accessible, and the steeper slope is allowed.

TABLE 6.4.3.A DISTRIBUTION OF DEPTHS IN WETLAND CELL			
DIVIDING BERM AT WQ DESIGN WATER SURFACE		DIVIDING BERM SUBMERGED 1 FOOT	
Depth Range (feet)	Percent	Depth Range (feet)	Percent
0.1 to 1	25	1 to 1.5	40
1 to 2	55	1.5 to 2	40
2 to 2.5	20	2 to 2.5	20

Lining Requirements

1. **In infiltrative soils**, both cells of the stormwater wetland shall be lined. To determine whether a low-permeability liner or a treatment liner is required, determine whether the following conditions will be met. If soil permeability will allow sufficient water retention, lining may be waived.
   - The second cell must retain water for at least 10 months of the year.
   - The first cell must retain at least three feet of water year-round.
   - The complete KCRTS precipitation record should be used when establishing these conditions.

   Intent: Many wetland plants can adapt to periods of summer drought, so a limited drought period is allowed in the second cell. This may allow a treatment liner rather than a low permeability liner to be used for the second cell. The first cell must retain water year-round in order for the presettling function to be effective.
2. If a **low permeability liner** is used, a minimum of 18 inches of native soil amended with good topsoil or compost (one part compost mixed with 3 parts native soil) must be placed over the liner. For **geomembrane liners**, a soil depth of 3 feet is recommended to prevent damage to the liner during planting. Hydric soils are not required.
3. The criteria for liners given in Section 6.2.4 (p. 6-23) must be observed.

DRAFT

Inlet and Outlet

Same as for basic wetponds (see page 6-74).

Access and Setbacks

1. Location of the stormwater wetland relative to ***site*** constraints (e.g., buildings, property lines, etc.) shall be the same as for detention ponds (see Section 5.3.1). See Section 6.2.3 (p. 6-21) for typical setback requirements for WQ facilities.
2. Access and maintenance **roads** shall be provided and designed according to the requirements for detention ponds (see Section 5.3.1). Access and maintenance roads shall extend to both the wetland inlet and outlet structures. An access ramp (7H minimum:1V) shall be provided to the bottom of the first cell unless all portions of the cell can be reached and sediment loaded from the top of the wetland side slopes. Also see "Access Requirements" in Section 5.3.1, for more information on access alternatives.
3. If the dividing berm is also used for access, it must be built to sustain loads of up to 80,000 pounds.

Signage

1. General signage shall be provided according to the requirements for detention ponds (see Section 5.3.1).

2. If the wetland is in a lake or sphagnum bog protection area, then signage discouraging feeding of waterfowl is required. The sign entitled "Four reasons not to feed ducks and geese" is available to download from the King County Water and Land Resources Division *Surface Water Design Manual* website. This sign, or other approved equivalent sign, shall be placed for maximum visibility from adjacent streets, sidewalks, and paths. Specifications for installing the sign are shown in Figure 6.4.1.C (p. 6-82).

Planting Requirements

The wetland cell shall be planted with emergent wetland plants following the recommendations given in Table 6.4.1.A (p. 6-77) or the recommendations of a wetland specialist. *Note: Cattails (Typha latifolia) are not recommended. They tend to escape to natural wetlands and crowd out other species. In addition, the shoots die back each fall and will result in oxygen depletion in the wetpool unless they are removed.*

Construction and Maintenance Considerations

Construction and maintenance considerations are the same as for basic wetponds. Construction of the naturalistic alternative (Option B) can be easily done by first excavating the entire area to the 1.5-foot average depth. Then soil subsequently excavated to form deeper areas can be deposited to raise other areas until the distribution of depths indicated in the design is achieved.

DRAFT

FIGURE 6.4.3.A STORMWATER WETLAND — OPTION A

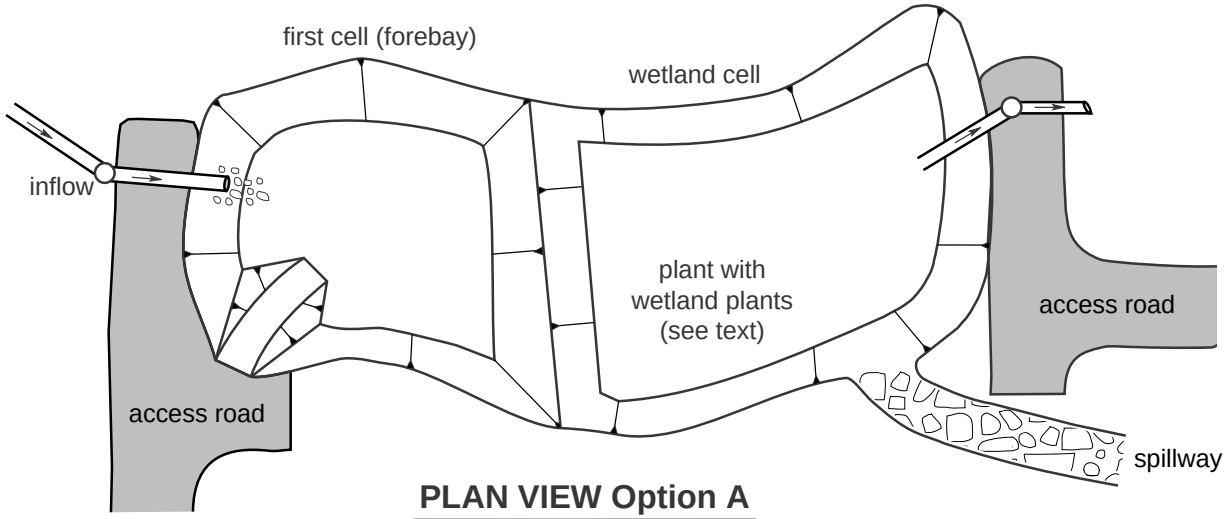

PLAN VIEW Option A

NTS

DRAFT

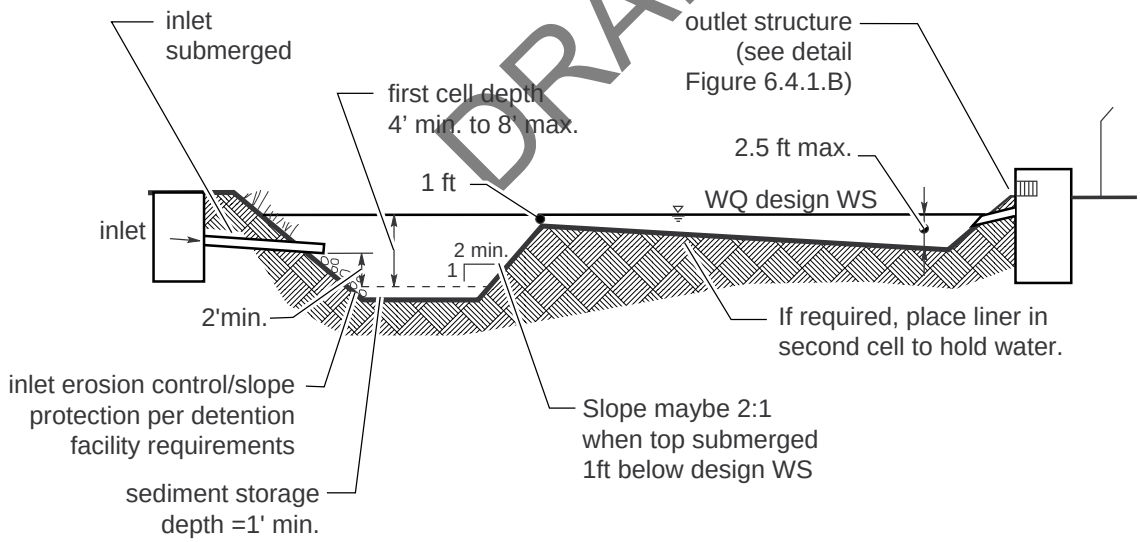

SECTION VIEW Option A

NTS

Note: See detention facility requirements for location and setback requirements.

FIGURE 6.4.3.B STORMWATER WETLAND — OPTION B

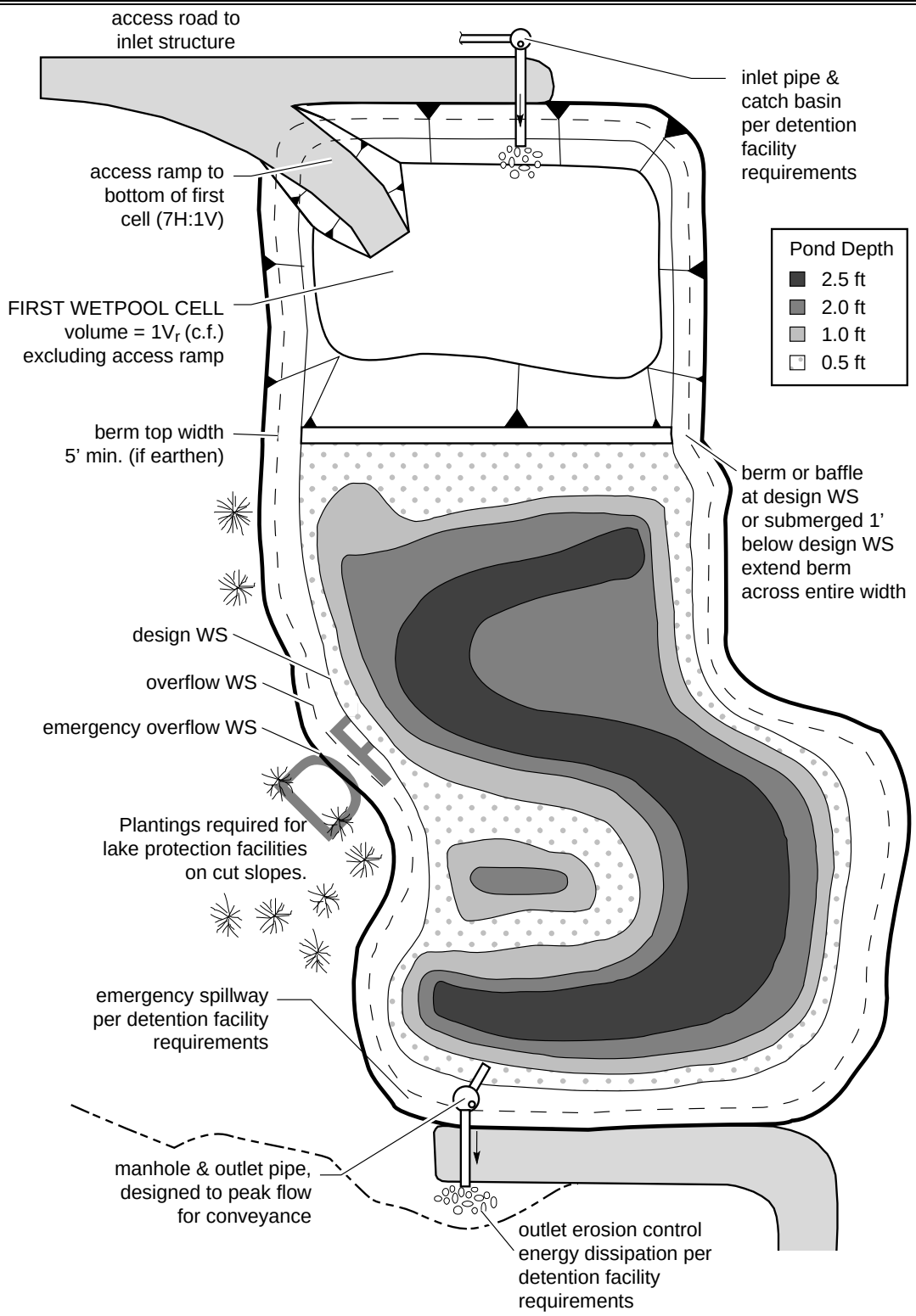

PLAN VIEW Option B

NTS

6.4.4 COMBINED DETENTION AND WETPOOL FACILITIES

Combined detention and WQ wetpool facilities have the appearance of a detention facility but contain a permanent pool of water as well. The following design procedures, requirements, and recommendations cover differences in the design of the stand-alone WQ facility when combined with detention storage. The following combined facilities are addressed:

- Detention/wetpond (basic and large)
- Detention/wetvault
- Detention/stormwater wetland.

There are two sizes of the combined wetpond, a basic and a large, but only a basic size for the combined wetvault and combined stormwater wetland. The facility sizes (basic and large) are related to the pollutant removal goals stated in the WQ menus. See Section 6.1 (p. 6-3) for more information on the WQ menus and treatment goals.

Applications and Limitations

Combined detention and water quality facilities are very efficient for ***sites*** that also have detention requirements. The water quality facility may often be placed beneath the detention facility without increasing the facility surface area. However, the **fluctuating water surface** of the live storage will create unique challenges for plant growth and for aesthetics alike.

The basis for pollutant removal in combined facilities is the same as in the stand-alone WQ facilities. However, in the combined facility, the detention function creates fluctuating water levels and added turbulence. For simplicity, the positive effect of the extra live storage volume and the negative effect of increased turbulence are assumed to balance, and are thus ignored when sizing the wetpool volume.[30] For the combined detention/stormwater wetland, criteria that limit the extent of water level fluctuation are specified to better ensure survival of the wetland plants.

Unlike the wetpool volume, the **live storage component** of the facility should be provided above the seasonal high water table.

Consult the water quality menus in Section 6.1 (p. 6-3) for information on how these combined facilities may be used to meet Core Requirement #8.

DRAFT

6.4.4.1 METHODS OF ANALYSIS

❑ COMBINED DETENTION AND WETPOND (BASIC AND LARGE)

The methods of analysis for combined detention and wetponds are identical to those outlined for wetponds and for detention facilities. Follow the procedure specified in Section 6.4.1.1 (p. 6-70) to determine the wetpool volume for a combined facility. Follow the standard procedure specified in Chapter 5 to size the detention portion of the pond.

❑ COMBINED DETENTION AND WETVAULT

The methods of analysis for combined detention and wetvaults are identical to those outlined for wetvaults and for detention facilities. Follow the procedure specified in Section 6.4.2 (p. 6-83) to determine the wetvault volume for a combined facility. Follow the standard procedure specified in Chapter 5 to size the detention portion of the vault.

[30] Many of the ponds studied in the Nationwide Urban Runoff Program were combined ponds.

❑ COMBINED DETENTION AND STORMWATER WETLAND

The methods of analysis for combined detention and stormwater wetlands are identical to those outlined for stormwater wetlands and for detention facilities. Follow the procedure specified in Section 6.4.3.1 (p.6-89) to determine the stormwater wetland size. Follow the standard procedure specified in Chapter 5 to size the detention portion of the wetland.

6.4.4.2 DESIGN CRITERIA

❑ COMBINED DETENTION AND WETPOND (BASIC AND LARGE)

Typical design details and concepts for a combined detention and wetpond are shown in Figure 6.4.4.A (p. 6-99). The **detention portion** of the facility shall meet the design criteria set forth in Chapter 5 and sizing procedures in Chapter 3.

Detention and Wetpool Geometry

1. The wetpool and sediment storage volumes shall not be included in the required detention volume.
2. The **"Wetpool Geometry"** criteria for wetponds (see page 6-73) shall apply with the following **modifications/clarifications:**

   a) **Criterion 1:** The **permanent pool** may be made shallower to take up most of the pond bottom, or deeper and positioned to take up only a limited portion of the bottom. Note, however, that having the first wetpool cell at the inlet allows for more efficient sediment management than if the cell is moved away from the inlet. Wetpond criteria governing water depth must, however, still be met. See Figure 6.4.4.B (p. 6-101) for two possibilities for wetpool cell placement.

   Intent: This flexibility in positioning cells is provided to allow for multiple use options, such as volleyball courts in live storage areas in the drier months. Landscape credit may be received subject to criteria in KCC 21A.14.180.D, summarized in "Stormwater Tracts as Recreational or Open Space" in Section 5.3.1.1.

   b) **Criterion 3:** The minimum **sediment storage depth** in the first cell is 1 foot. The 6 inches of sediment storage required for detention ponds does not need to be added to this, but 6 inches of sediment storage must be added to the second cell to comply with the detention sediment storage requirement.

DRAFT

Berms, Baffles, and Slopes

Same as for wetponds (see page 6-74).

Inlet and Outlet

The "Inlet and Outlet" criteria for **wetponds** (see page 6-74) shall apply with the following **modifications:**

1. **Criterion 2:** A **sump** must be provided in the outlet structure of combined ponds.
2. The detention flow restrictor and its outlet pipe shall be designed according to the requirements for detention ponds (see Section 5.3.4.2).

Access and Setbacks

Same as for wetponds (see page 6-76).

Signage

1. Signage shall be provided according to the requirements for detention ponds (see Section 5.3.1).
2. If the wetpond is in a lake or sphagnum bog protection area, signage discouraging feeding of waterfowl is required. The sign entitled "Four reasons not to feed ducks and geese" is available to download from the King County Water and Land Resources Division *Surface Water Design Manual* website. This sign, or other approved equivalent sign, shall be placed for maximum visibility from adjacent streets, sidewalks, and paths. Specifications for installing the sign are shown in Figure 6.4.1.C (p. 6-82).

Planting Requirements

Same as for wetponds (see page 6-76).

❑ COMBINED DETENTION AND WETVAULT

The design criteria for detention vaults and wetvaults must **both** be met, except for the following **modifications or clarifications:**

1. The minimum **sediment storage depth** in the first cell shall average 1 foot. The 6 inches of sediment storage required for detention vaults does not need to be added to this, but 6 inches of sediment storage must be added to the second cell to comply with detention vault sediment storage requirements.
2. The **oil retaining baffle** shall extend a minimum of 2 feet below the WQ design water surface.

   Intent: The greater depth of the baffle in relation to the WQ design water surface compensates for the greater water level fluctuations experienced in the combined vault. The greater depth is deemed prudent to better ensure that separated oils remain within the vault, even during storm events.

***Note**: If a vault is used for detention as well as water quality control, the facility shall not be modified to function as a baffle oil/water separator as allowed for wetvaults on page 6-87. This is because the added pool fluctuation in the combined vault does not allow for the quiescent conditions needed for oil separation.*

DRAFT

❑ COMBINED DETENTION AND STORMWATER WETLAND

The design criteria for detention ponds and stormwater wetlands must both be met, except for the following **modifications or clarifications:**

1. The **"Wetland Geometry"** criteria for stormwater wetlands (see page 6-90) are modified as follows:

   Criterion 4: The minimum **sediment storage depth** in the first cell is 1 foot. The 6 inches of sediment storage required for detention ponds does not need to be added to this, nor does the 6 inches of sediment storage in the second cell of detention ponds need to be added.

   Intent: Since emergent plants are limited to shallower water depths, the deeper water created before sediments accumulate is considered detrimental to robust emergent growth. Therefore, sediment storage is confined to the first cell which functions as a presettling cell.

2. The "**Inlet and Outlet**" criteria for **wetponds** (see page 6-74) shall apply with the following **modifications:**

   a) **Criterion 2:** A **sump** must be provided in the outlet structure of combined facilities.

   b) The detention **flow restrictor** and its outlet pipe shall be designed according to the requirements for detention ponds (see Section 5.3.4.2).

3. The **"Planting Requirements"** for stormwater wetlands (see page 6-92) are **modified** to use the following plants which are better adapted to water level fluctuations:

   - *Scirpus acutus* (hardstem bulrush) 2 - 6' depth
   - *Scirpus microcarpus* (small-fruited bulrush) 1 - 2.5' depth
   - *Sparganium emersum* (burreed) 1 - 2' depth
   - *Sparganium eurycarpum* (burreed) 1 - 2' depth
   - *Veronica* sp. (marsh speedwell) 0 - 1' depth

   In addition, the shrub *Spirea douglasii* (Douglas spirea) may be used in combined facilities.

   Water Level Fluctuation Restrictions: The difference between the WQ design water surface and the maximum water surface associated with the 2-year runoff shall not be greater than 3 feet. If this restriction cannot be met, the size of the stormwater wetland must be increased. The **additional area** may be placed in the first cell, second cell, or both. If placed in the second cell, the additional area need not be planted with wetland vegetation or counted in calculating the average depth.

   Intent: This criterion is designed to dampen the most extreme water level fluctuations expected in combined facilities to better ensure that fluctuation-tolerant wetland plants will be able to survive in the facility. It is **not intended** to protect native wetland plant communities and is **not to be applied to natural wetlands**.

DRAFT

FIGURE 6.4.4.A COMBINED DETENTION AND WETPOND

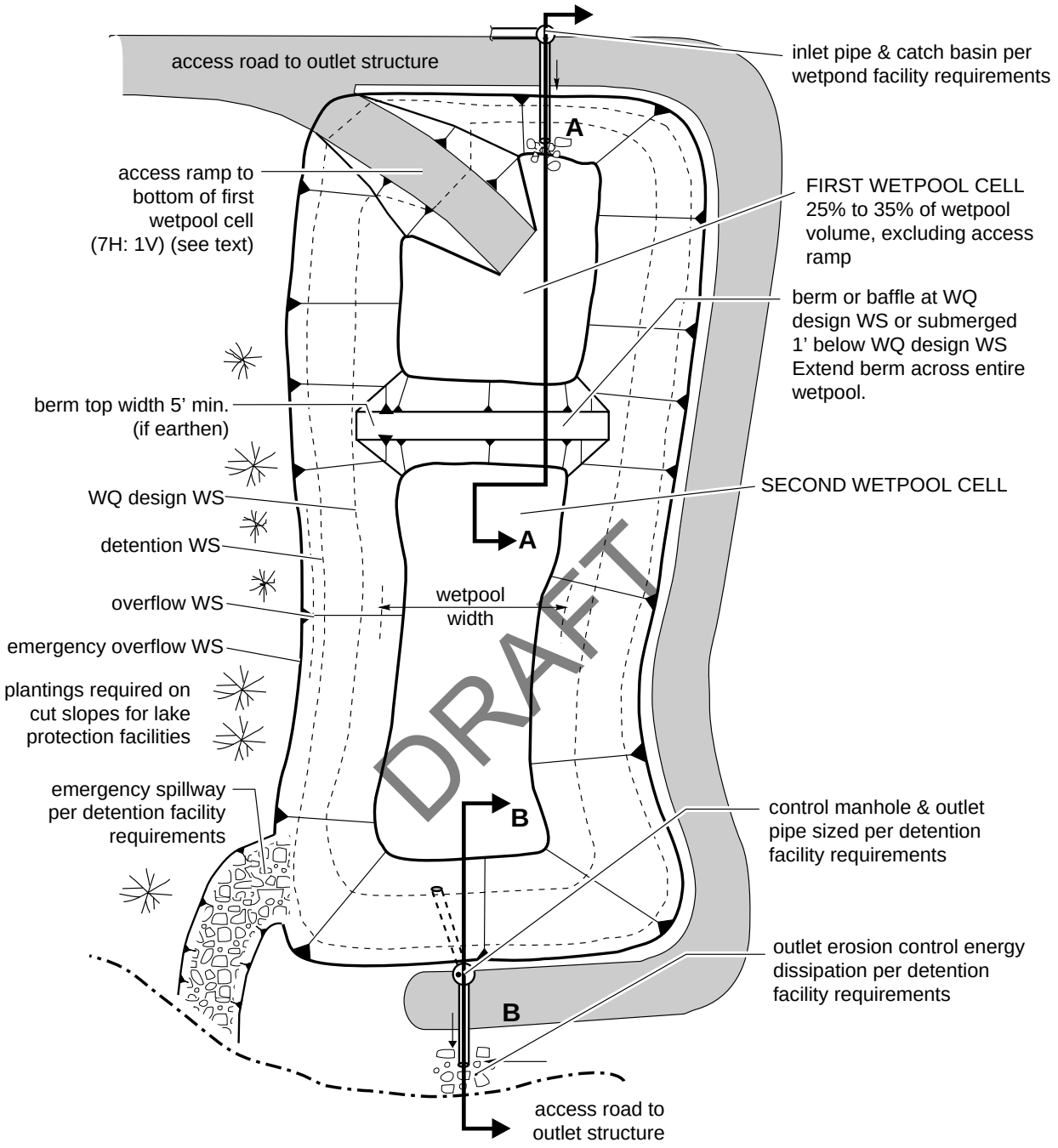

PLAN VIEW
NTS

FIGURE 6.4.4.A COMBINED DETENTION AND WETPOND (*CONTINUED*)

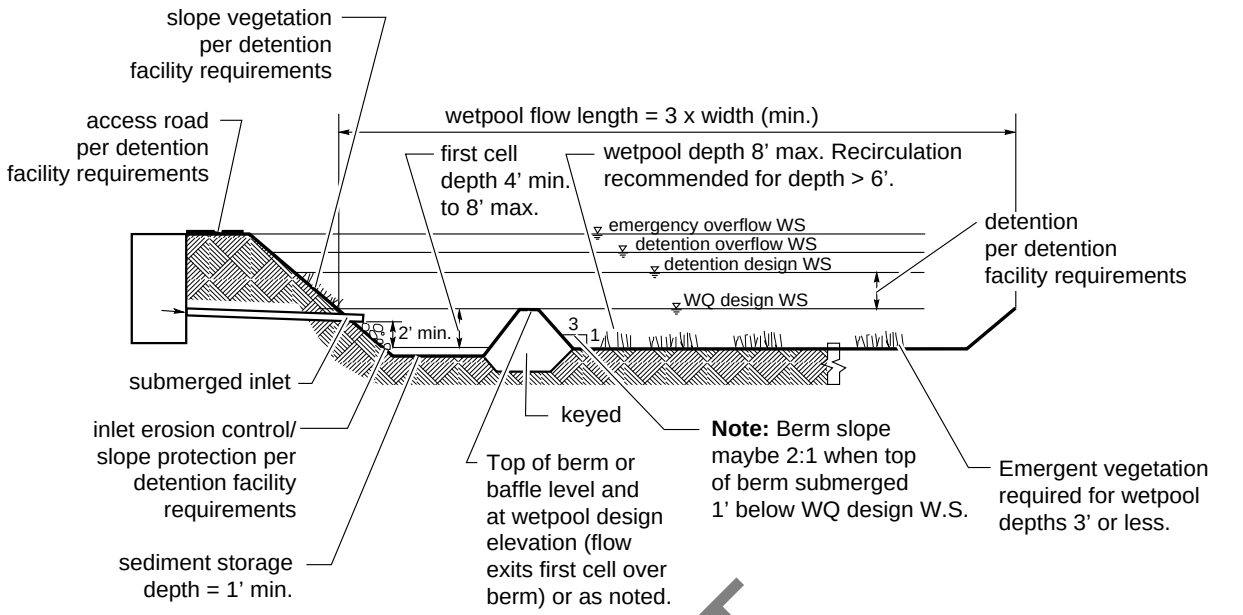

SECTION A-A
NTS

DRAFT

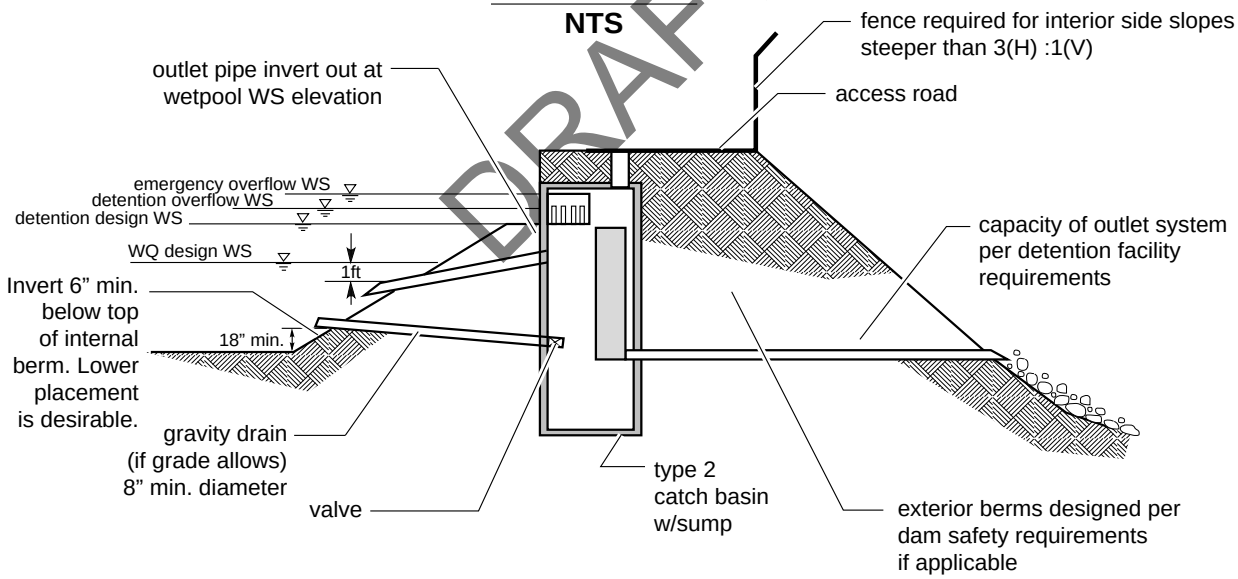

Note: See detention facility requirements for location, interior & exterior sideslopes, and setback requirements.

SECTION B-B
NTS

FIGURE 6.4.4.B ALTERNATIVE CONFIGURATIONS OF DETENTION AND WETPOOL AREAS

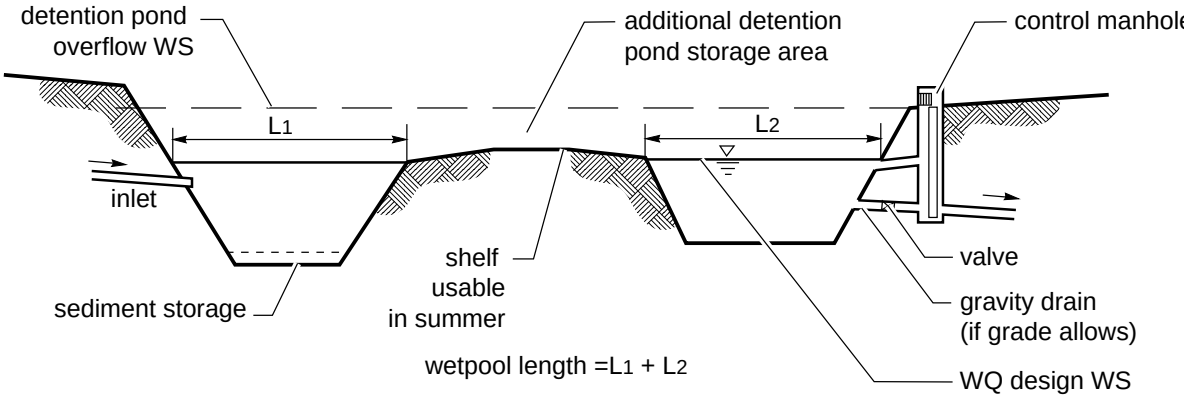

SECTION VIEW
NTS

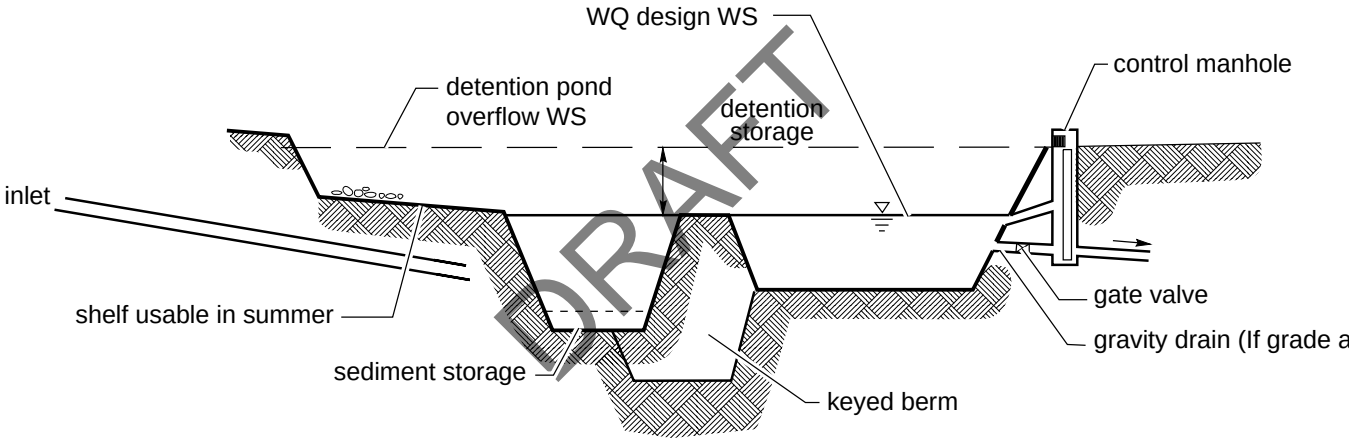

DRAFT

SECTION VIEW
NTS

Note: These examples show how the combined detention/wetpool can be configured to allow for "shelves" for joint use opportunities in dry weather. Other options may also be acceptable.

DRAFT

6.5 MEDIA FILTRATION FACILITY DESIGNS

This section presents the methods, criteria, and details for analysis and design of sand filters and generic information for StormFilters®. Specifically, the following specific facility designs are included in this section:

- "Sand Filters — Basic and Large," Section 6.5.2 (p. 6-104)
- "Sand Filter Vaults," Section 6.5.3 (p. 6-124)
- "Linear Sand Filters," Section 6.5.4 (p. 6-130)
- "StormFilter®," Section 6.5.5 (p. 6-135).

The information presented for each filtration facility is organized into the following categories:

1. **Methods of Analysis:** Contains a step-by-step procedure for designing and sizing each facility.
2. **Design Criteria:** Contains the details, specifications, and material requirements for each facility.

6.5.1 GENERAL REQUIREMENTS FOR MEDIA FILTRATION FACILITIES

DRAFT

Presettling Requirement

Filtration facilities are particularly susceptible to clogging. Presettling must therefore be provided before stormwater enters a filtration facility. The presettling treatment goal is to remove 50 percent of the total suspended solids (TSS). This requirement may be met by **any of the following:**

1. A water quality facility from the Basic WQ Menu (see Section 6.1.1 for facility options).
2. A presettling pond or vault, which may be integrated as the first cell of the filtration facility, with a treatment volume equal to 0.75 times the runoff from the mean annual storm (V_r = 0.75). See Section 6.4.1.1 (p. 6-70) for information on computing V_r. See design requirements below. *Note: For the linear sand filter, use the sediment cell sizing given in the design instead of the above sizing.*
3. A detention facility sized to meet the Level 2 flow control standard.
4. A King County approved pretreatment technology (see Section 6.2.3 Emerging Technologies).

Other Pretreatment Requirements

1. Sand filters not preceded by a facility that captures floatables, such as a spill control tee, must provide pretreatment to remove **floatable trash and debris** before flows reach the sand bed. This requirement may be met by providing a catch basin with a capped riser on the inlet to the sand filter (see Figure 6.5.2.B, p. 6-122).
2. For ***high-use sites***, sand filters must be preceded by an **oil control option** from the High-Use menu, Section 6.1.5 (p. 6-14).

Design Criteria for Presettling Cells

1. If water in the presettling cell or upstream WQ facility will be in direct contact with the soil, it must be **lined** per the liner requirements in Section 6.2.4.

   Intent: to prevent groundwater contamination from untreated stormwater runoff in areas of excessively drained soils.

2. The presettling cell shall conform to the following:
   a) The **length-to-width ratio** should be 3:1. Berms or baffles may be used to lengthen the flowpath.
   b) The **minimum depth** shall be 3 feet; the **maximum depth** shall be 6 feet.
3. Inlets and outlets shall be designed to minimize velocity and reduce turbulence.

6.5.2 SAND FILTERS — BASIC AND LARGE

A *sand filter* operates much like an infiltration pond (see the sand filter detail in Figure 6.5.2.A, p. 6-120). However, instead of infiltrating into native soils, stormwater filters through a constructed sand bed with an underdrain system. Runoff enters the pond and spreads over the surface of the filter. As flows increase, water backs up in the pond where it is held until it can percolate through the sand. The treatment pathway is vertical (downward through the sand) rather than horizontal as it is in biofiltration swales and filter strips. High flows in excess of the WQ treatment goal simply spill out over the top of the pond. Water that percolates through the sand is collected in an underdrain system of drain rock and pipes which directs the treated runoff to the downstream drainage system.

A sand filter removes pollutants by filtration. As stormwater passes through the sand, pollutants are trapped in the small spaces between sand grains or adhere to the sand surface. Over time, soil bacteria will also grow in the sand bed, and some biological treatment may occur. To get better performance from a sand filter, the volume of water spilled over the top should be reduced. Increasing the sand thickness will not dependably improve performance.

The following design procedures, requirements, and recommendations cover two sand filter sizes: a basic size and a large size. The **basic sand filter** is designed to meet the Basic WQ menu goal of 80% TSS removal. The **large sand filter** is expected to meet the Sensitive Lake Protection menu goal of 50% total phosphorus removal.

DRAFT

Applications and Limitations

A sand filter may be used in most residential, commercial, and industrial developments where ***site*** topography and drainage provide adequate hydraulic head to operate the filter. *An elevation difference of about 4 feet between the inlet and outlet of the filter is usually needed to install a sand filter.*

Sand filters could be easily integrated into landscape plans as areas for summer sports, such as volleyball. Landscape uses may be somewhat constrained because the vegetation capable of surviving in sand is limited. Trees and shrubs which generate a large leaf fall shall be avoided in the immediate vicinity of the filter because leaves and other debris can clog the surface of the filter.

Sand filters are designed to prevent water from backing up into the sand layer (the underdrain system must drain freely). Therefore, a sand filter is more **difficult to install in areas with high water tables** where groundwater could potentially flood the underdrain system. Water standing in the underdrain system will also keep the sand saturated. Under these conditions, oxygen can be depleted, releasing pollutants such as metals and phosphorus that are more mobile under anoxic conditions.

Because the surface of the sand filter will clog from sediment and other debris, this facility **should not be used in areas where heavy sediment loads are expected**. A sand filter should not be used during construction to control sediments unless the sand bed is replaced periodically during construction and after the ***project site*** is stabilized.

Consult the water quality menus in Section 6.1 (p. 6-3) for information on how basic and large sand filters may be used to meet Core Requirement # 8.

6.5.2.1 METHODS OF ANALYSIS

This section presents the methods of analysis for both **basic and large sand filters**.

A sand filter is designed with two parts: (1) a **temporary storage reservoir** to store runoff, and (2) a **sand filter bed** through which the stored runoff must percolate. Usually the storage reservoir is simply placed directly above the filter, and the floor of the reservoir pond is the top of the sand bed. For this case, the storage volume also determines the hydraulic head over the filter surface, which increases the rate of flow through the sand.

Two methods are given here to size sand filters: a simple method and a detailed computer modeling method. The **simple method** uses standard values to define filter hydraulic characteristics for determining the sand surface area. This method is useful for planning purposes, for a first approximation to begin iterations in the detailed method, or when use of the detailed computer model is not desired or not available. The simple sizing method **very often results in a larger filter** than the detailed method.

The **detailed routing method** uses the King County Runoff Time Series (KCRTS) computer model to determine sand filter area and pond size based on individual ***site*** conditions.[31] Use of the KCRTS design method **very often results in smaller filter sizes** than the simple method, **especially if the facility is downstream of a detention facility**. Both methods include parameters for sizing either a basic or a large sand filter.

Background

There are several variables used in sand filter design which are similar and often confused, even by well-trained individuals. Use of these variables is explained below.

The sand filter design is based on Darcy's law:

$$Q = KiA \tag{6-16}$$

where Q = WQ design flow (cfs)
K = hydraulic conductivity (fps)
A = surface area perpendicular to the direction of flow (sf)
i = hydraulic gradient (ft/ft) for a constant head and constant media depth, computed as follows:

$$i = \frac{h+l}{l} \tag{6-17}$$

where h = average depth of water above filter (ft), defined for this design as $d/2$
d = maximum storage depth above filter (ft)
l = thickness of sand media (ft)

Although it is not seen directly, Darcy's law underlies both the simple and the routing design methods. ***V***, or more correctly, ***1/V***, is the direct input in the sand filter design. The relationship between V and K is revealed by equating Darcy's law and the equation of continuity, $Q = VA$. *Note: When water is flowing into the ground, V is commonly called the* ***filtration rate****. It is ordinarily measured in a percolation test.*

[31] ~~These flows are roughly equivalent to the WQ design flows used by the Dept. of Ecology in it's 1992 stormwater management manual. The Ecology design flow is based on the peak flow predicted by the SBUH event model for 64% of the 2-year 24-hour rainfall.~~

DRAFT

Specifically:

$$Q = KiA \quad \text{and} \quad Q = VA$$

So,

$$VA = KiA \quad \text{or} \quad V = Ki \tag{6-18}$$

Note that $V \neq K$—that is, the filtration rate is not the same as the hydraulic conductivity, but they do have the same units (distance per time). K can be equated to V by dividing V by the hydraulic gradient i, which is defined above in Equation (6-17).

The hydraulic conductivity ***K* does not change with head** nor is it dependent on the thickness of the media, only on the characteristics of the media and the fluid. The hydraulic conductivity of 1 inch per hour (2.315×10^{-5} fps) used in this design is based on bench-scale tests of conditioned rather than clean sand. This design hydraulic conductivity represents the average sand bed condition as silt is captured and held in the filter bed.[32]

Unlike the hydraulic conductivity, the filtration rate ***V* changes with head and media thickness**, although the media thickness is constant in the sand filter design. Table 6.5.2.B on page 6-110 shows values of V for different water depths d (remember, $d = 2h$).

The KCRTS program uses the inverse of the filtration rate, $1/V$, in units of minutes per inch; this is how Darcy's law is expressed in the design. The simple method is also based on $1/V$, but flows and areas are computed for the user in terms of acre equivalents. Thus both the simple and the KCRTS method are based on Darcy's law.

The simple sizing method is different from the KCRTS method because it does not route flows through the filter. It determines the size of the filter based on the simple assumption that inflow is immediately discharged through the filter as if there were no storage volume. An **adjustment factor**–the 0.7 in Equation (6-19)–is applied to compensate for the greater filter size resulting from this method. Even with this adjustment factor, however, the simple method generally produces larger filter sizes than the detailed routing method.

DRAFT

Simple Sizing Method

The simple method has been developed to design sand filters that meet the required treatment volume without performing detailed modeling. Steps for the simple sizing procedure are summarized below.

Step 1: Determine whether a basic or large sand filter is needed. Consult the water quality menus in Section 6.1 (p. 6-3) to determine the size of filter needed, either basic or large.

Step 2: Determine the rainfall region and regional scale factor. Regional scale factors are used to account for differences in rainfall at locations distant from the two gaging locations in King County, Sea-Tac Airport and Landsburg. Refer to the precipitation scaling map in Chapter 3, Figure 3.2.2.A, to determine the scale factor for the project area.

Step 3: Determine maximum depth of water above sand filter. Determine the maximum water storage depth above the surface of the filter. This depth is defined as the depth at which water begins to overflow the reservoir pond, and it depends on ***site*** topography and hydraulic constraints. The depth is chosen by the designer.

[32] King County has tested various sand mixes conditioned with simulated stormwater to establish realistic design standards. Tests were conducted under falling head conditions in columns containing 18 inches of sand underlain with a 2-inch layer of washed drain gravel containing a section of 2-inch perforated PVC pipe to simulate the underdrain system. Details are given in Koon, John, "Determination of infiltration rate and hydraulic conductivity for various sand filter media." January 1996.

Step 4: Determine *site* characteristics. Determine the total number of impervious acres and the total number of grass acres draining to the sand filter. Determine whether the ***project site*** is on till or outwash soils. Refer to Table 3.2.2.B in Chapter 3 to determine which soil types are considered till and which are considered outwash.

Step 5. Calculate minimum required surface area for sand filter. Determine the sand filter area by multiplying the values in Table 6.5.2.A by the tributary acreages from Step 4 using the following equation:

$$A_{sf} = 0.7C_s\,(T_iA_i + T_{tg}A_{tg} + T_{og}A_{og}) \qquad (6\text{-}19)$$

where A_{sf} = sand filter area (sf)
0.7 = adjustment factor to account for routing effect on size
C_s = regional scale factor (unitless) from Step 2
$T_{i,tg,og}$ = tributary area per soil/cover type (acres)
$A_{i,tg,og}$ = filter area per soil/cover type (sf/acre) from Table 6.5.2.A

For depths between the values given in the table, areas may be interpolated. For depths outside the range presented in the table, the detailed routing method must be used.

TABLE 6.5.2.A SAND FILTER AREA INCREMENTS FOR VARIOUS SOIL AND COVER TYPES

Region and Treatment Goal	Maximum Depth above filter (ft)	SOIL AND COVER TYPES[33] [filter area (sf) / tributary area (acre)]		
		A_i Impervious	A_{tg} Till Grass	A_{og} Outwash Grass
Sea-Tac Basic size	6	760	160	140
	3	1140	240	210
	1	1711	360	314
Landsburg Basic size	6	819	180	160
	3	1229	270	235
	1	1844	405	355
Sea-Tac Large size	6	1179	279	250
	3	1769	419	370
	1	2654	629	550
Landsburg Large size	6	1300	300	260
	3	1950	449	395
	1	2926	674	590

Note: Forested areas may be ignored. Vegetated areas other than grass may still be represented as grass for the simple sizing method, or the detailed routing method may be employed using actual cover types.

DRAFT

[33] The values in Table 6.5.2.A were derived as follows. Flows were estimated using the KCRTS model for one acre of the cover types selected in the table. Darcy's law ($Q = Ki\,A$) was then used to determine sand filter area using this flow Q, the hydraulic gradient i for the various ponding depths given, and a hydraulic conductivity k of 2.3 X 10^{-5} fps (1 inch/hr). The hydraulic gradient i was calculated as $(h+l)/\,l$, where h = the average depth of water above the filter, taken to be the ponding depth $d/2$, and l = the thickness of the sand layer, which is 1.5 feet. The hydraulic conductivity represents a partially plugged sand condition found by bench-scale testing using successive trials with turbid water.

Step 6: Size the underdrain system. The underdrain system is sized to convey the peak filtered flows to the outlet. The design criteria in "Underdrain Systems" (p. 6-114) may be used in lieu of analyzing conveyance capacity for feeder pipes. Strip drains must be analyzed for conveyance per manufacturer's specifications.

The collector pipe (i.e., the pipe collecting flows from the rest of the underdrain system) shall be sized to convey the 2-year, 15-minute peak flow with one foot of head above the invert of the upstream end of the collector pipe. Conveyance capacity can be checked using the "BW" computer program.

Intent: The underdrain must be able to remove standing water from beneath the sand. If standing water remains, the sand will remain saturated. This could cause oxygen depletion and reducing conditions in the sand, allowing some pollutants to become mobile and be released from the filter to downstream receiving waters.

Simple Method Sizing Example

For a ***site*** near the city of Snoqualmie with 2 acres of impervious area and 2 acres of outwash grass draining to the sand filter, and 3 feet of head above the filter, the **required sand area** for a **basic size sand filter** would be found as follows:

Site Areas		Table 6.5.2.A values for Landsburg, basic size		
2 acres	x	1229 sf/acre	=	2458 sf
+ 2 acres	x	235 sf/acre	=	470 sf
			=	2928 sf

DRAFT

Multiply 2928 square feet by the C_s for the Snoqualmie area, which (from Figure 3.2.2.A) is 1.2 times the increments for the Landsburg area. Also, multiply that result by the 0.7 adjustment factor.

2928 sf x 1.2 x 0.7 = 2460 sf

The required sand bed area is therefore **2460 square feet.**

Note: Find the total facility area by adding 3H:1V side slopes for the 3 foot ponding depth plus extra vertical height to convey the 100-year flow. If the total pond depth is 3.5 feet, the sand filter will require a total land area of (50 ft + 10.5 ft) x (50 ft + 10.5 ft) = 3660 square feet, plus access and setback requirements.

Detailed KCRTS Routing Method

The KCRTS routing method allows the designer to optimize filter geometry and sizing to meet specific ***site*** conditions. For sand filters located downstream of detention facilities, this method will result in **significantly smaller facilities** than using the simple method described above. The detailed method requires a trial and error solution using KCRTS to route the developed inflow runoff time series through various sand filter configurations until the amount of runoff that passes through the filter media and is treated meets or exceeds the treatment objective defined for the facility. Refer to the *KCRTS Computer Software Reference Manual* for general instructions on using the KCRTS program. Steps for the design process, with specific instructions on how to use KCRTS for sand filter sizing, are described below.

Step 1: Determine whether a basic or large sand filter is required. Consult the water quality menus in Section 6.1 (p. 6-3) to determine the size of filter needed. A basic sand filter is sized so that 90% of the runoff volume will pass through the filter, rather than 95% as stated in Section 6.2.1 (p. 6-17) for the WQ

design volume. A large sand filter is sized such that a minimum of 95% of the runoff volume passes through the filter.[34]

Step 2: Determine rainfall region and regional scale factor. Regional scale factors are used to account for differences in rainfall at various locations in King County. Refer to the precipitation scaling map in Chapter 3, Figure 3.2.2.A, to determine the scale factor for the project area.

Step 3: Create inflow time series. The developed inflow time series is created using the KCRTS program as described in Chapter 3. If the sand filter is upstream of detention, the time series is that of the developed ***site***. If the sand filter is downstream of detention, the time series is that the outflow time series leaving the detention facility.

Note: Sand filters located downstream from detention facilities are significantly smaller than those treating runoff before it is detained. Likewise, sand filters receiving flows from Level 2 detention facilities are smaller than those below Level 1 facilities.

Step 4: Determine the design overflow volume (on-line facilities). The percent of total runoff volume required to pass through the filter was determined in Step 1 (either 90 or 95%). To determine the design overflow volume, multiply the total runoff volume by one minus the percentage (either 0.10 or 0.05). The total runoff volume can be found using the "Compute Volume Discharge" routine found in the "Analysis Tools" module after the inflow time series is created. Detailed instructions for creating the time series can be found in the *KCRTS Computer Software Reference Manual*.[35]

The start and end dates for the reduced runoff time series are as follows:

Start date: 10/1/0

End date: 9/30/8

Note: For most WQ facilities, the designer may chose to design the facility as either on-line (all flow goes through the facility) or off-line (flows above the WQ design flow bypass the facility). An off-line sand filter has a high-flow bypass with an upstream flow splitter designed to bypass flows above 60% of the 2-yr peak discharge using 15-min time steps calibrated to specific ***site*** *conditions (see Section 6.2.5, p. 6-29, for more information on flow splitter design). The design overflow volume for off-line sand filters is zero, since all flows routed to the filter will be at or below the WQ design flow. Flow-splitting can be performed within the KCRTS 2-Outlet Reservoir routine. Using the WQ design flow should ensure treatment of the design water quality volume will be achieved. A check using Compute Volume may be performed to verify treatment volume.*

DRAFT

Step 5: Define sand filter modeling parameters. Sand filters can be sized with the "Size a Facility" routine using the infiltration pond option. The following parameters are required for the analysis:

a) Manual Mode: When specifying the filename for the facility, switch the "Design Technique" to manual which allows the user full control of all facility parameters.

b) Side slope: horizontal component of slope (ft/ft) for the pond (reservoir above the sand filter)

c) Sand filter area A_{sf}: the surface area of the filter (sf). As a first approximation, it is recommended that the area calculated using the simple sizing method be used. KCRTS refers to this area as the bottom area of the infiltration pond. Bottom area can be specified using Length, Width, or Area. Press F2 to view additional help file information on how KCRTS handles these entries.

[34] For sand filters, the volume to be treated to meet the Basic menu goal is only 90% (rather than 95%) of the total runoff volume. This is because the sand filter has been documented to provide better than 80% TSS removal, and thus exceeds the treatment goal of the Basic WQ menu. Therefore, less runoff volume can be treated and still meet the basic water quality goal.

[35] Instructions for creating the time series are summarized as follows: **Select** "CREATE a new time series" at the main menu. Enter rainfall region and scale factor (see Figure 3.2.2.A), soil and land cover areas, time step, and data type (reduced record). **Select** "COMPUTE total area." Enter a name for the inflow time series. **Select** "COMPUTE time series." Press F10 to view information created; press "ENTER" to return to main menu. At the main menu, **select** "ENTER Analysis TOOLS module." **Select** "COMPUTE volume discharge," and enter the inflow time series name. Enter start date and end date for time series. **Select** "EXTRACT discharge volume." This is the total runoff volume in the time series. **Select** "CONTINUE," and then **select** "RETURN to previous menu."

d) Maximum water depth *d* over filter: depth at which runoff begins to overflow the sand filter (ft), referred to in KCRTS as the effective storage depth of the reservoir.

e) Permeable surfaces: bottom only.

f) Riser and orifice information:

- Elevation at 0 stage: 0 is fine for design. This sets a datum adjustment; which if set, the program will display water levels based on relative stage and absolute elevation. KCRTS will set stage 0.0 at the top of the sand filter media.
- Riser head: same as the maximum water depth.
- Riser diameter: 12 - 36 inches (must meet the criteria for "Overflow and Bypass Structures," p. 6-112). KCRTS will not include spillway overflows. Riser Diameter should be set carefully to closely simulate the actual overflow structure.
- Number of orifices: zero. All runoff will either percolate through sand or overflow the riser.
- Top of riser: flat.

g) Vertical infiltration: the inverse of the filtration rate *V*, or 1/*V*, and is entered in units of **minutes per inch.** Values for *V* and 1/*V* for various ponding depths are summarized in Table 6.5.2.B (below).

TABLE 6.5.2.B SAND FILTER DESIGN PARAMETERS

	Sand Filter Design Parameters					
Facility ponding depth *d* (ft)	1	2	3	4	5	6
Filtration rate *V* (in/hr)*	1.33	1.67	2.00	2.33	2.67	3.0
1/*V* (min/in)	45	36	30	26	22.5	20

* *Note:* The filtration rate is not used directly but is provided for information. *V* equals the hydraulic conductivity *K* times the hydraulic gradient *i*. The hydraulic conductivity used is 1 inch/hr. The hydraulic gradient = $(h + l) / l$, where $h = d/2$ and l = the sand depth (1.5 ft). See "Background" (p. 6-105) for more information on the definition of terms.

DRAFT

Step 6: Size the sand filter. The KCRTS facility sizing routine is used to design the sand filter as follows:

a) Select [F] "Size a facility" option from the KCRTS main menu.

b) Specify a filename to save the sand filter facility data.

c) Set the “Design Technique” to manual mode.

d) Select "Create a New R/D Facility."

e) Specify an Infiltration Pond as the facility type, and input the facility specifications determined in Step 5. The primary variable to be adjusted by the designer is the bottom area, which corresponds to the required filter area.

f) Select [P] "Point of Compliance."

g) Enter Facility Inflow times series (.tsf). Select "Return to Facility Edit." Since sizing of sand filters is done in manual (rather than automatic) mode, there is no need to complete the setup of the test hydrograph parameters.

h) Skip [H] Test Hydrograph List.

i) Select the [S] "Save Facility" option.

Step 7: Route inflow time series through sand filter and compare volumes. Compare the outflow volume passing through the filter with the required treatment volume. KCRTS can perform the time series routing and the volume comparisons. To set up the volume comparison, perform the following steps:

a) Select [M] "Modify Auto-Analysis" and enter facility outflow name.

b) Toggle the "Calculate Volume." Additionally, toggle to "Skip Peaks," "Do not Notify" and "Skip Durations," as necessary.

c) Select "Edit Peak/Duration/Volume Information," and specify the same start and end dates specified in Step 4.

d) Override file while returning to main facility design menu.

e) From the main facility design menu, select [A] "Route Time Series and Perform Auto Analysis."

f) Press F10 to display routing data; press ENTER to continue with volume calculation. Press F10 to view the time series outflow volume. This represents the total volume of water which overtopped the riser and was not treated. Compare the overflow volume with the maximum allowable design discharge volume identified in Step 4.

- If the volume of water spilled exceeded the design outflow volume, increase the bottom area of the facility by selecting [E] "Edit Facility." Repeat this step until the desired performance is achieved.
- If the volume of water spilled is less than the design outflow volume, decrease the bottom area until the outflow and the design outflow match (approximately).

Note: By modeling the sand filter as an infiltration facility, KCRTS assumes that the runoff infiltrated through the sand is lost from the model. However, most sand filters are designed with underdrain collection systems that collect filtered runoff and convey treated runoff to the downstream drainage system; the attenuating effects of the sand filter reservoir are ignored.

DRAFT

Step 8: Size the underdrain system. The underdrain system is sized to convey the peak filtered flows to the outlet. The **central collector pipe(s)** shall be conservatively sized to convey the WQ design flow into the facility using the "KCBW" backwater analysis techniques described in Chapter 4. To simplify the analysis, all flows may be assumed to enter the collector pipe at the upstream end. Typically, the collector pipe will not be inlet controlled, so a simple square inlet type may be assumed. The full head of the facility may be utilized to convey flows through the pipe. Minimum pipe capacity shall be no less than that required to convey the water quality design flow entering the facility.

Feeder pipes may be sized using the design criteria in "Underdrain Systems" (p. 6-114) instead of analyzing the conveyance capacity as described above.

Strip drains must be analyzed for conveyance per manufacturer's specifications.

Intent: The underdrain must be able to remove standing water from beneath the sand. If standing water remains, the sand will remain saturated. This could cause reducing conditions in the sand, allowing some pollutants to become mobile and be released from the filter to downstream receiving waters.

6.5.2.2 DESIGN CRITERIA

General design concepts and a typical layout of a sand filter are shown in Figure 6.5.2.A (p. 6-120) and Figure 6.5.2.B (p. 6-122).

Sand Filter Geometry

1. **Any shape** sand bed may be used, including circular or free-form designs. *Note: The treatment process is governed by **vertical** flow, so short-circuiting is not a concern as it is in wetponds.*
2. **Sand depth** (*l*) shall be 18 inches (1.5 feet) minimum.
3. **Depth of storage** over the filter media (*d*) shall be 6 feet maximum.

Pretreatment, Flow Spreading, and Energy Dissipation

1. See general presettling and pretreatment requirements for filtration facilities in Section 6.5.1 (p. 6-103).
2. A **flow spreader** shall be installed at the inlet along one side of the filter to evenly distribute incoming runoff across the filter and prevent erosion of the filter surface. See Section 6.2.6 (p. 6-33) for details on flow spreaders.
   a) **If the sand filter is curved or an irregular shape**, a flow spreader shall be provided for a minimum of 20 percent of the filter perimeter.
   b) If the **length-to-width ratio** of the filter is 2:1 or greater, a flow spreader must be located on the longer side and for a **minimum length** of 20 percent of the facility perimeter.
   c) In other situations, use good engineering judgment in positioning the spreader.
3. **Erosion protection** shall be provided along the first foot of the sand bed adjacent to the flow spreader. Geotextile (meeting the specifications in Table 6.5.2.D, page 6-113) weighted with sand bags at 15-foot intervals may be used. Quarry spalls may also be used.

DRAFT

Overflow and Bypass Structures

1. **On-line filters**[36] shall be equipped with **overflows** (primary, secondary, and emergency) in accordance with the design criteria for detention ponds (see Section 5.3.1.1, criteria for "Overflow" and "Emergency Overflow Spillway"). *Note: The primary overflow may be incorporated into the emergency spillway in cases where the spillway discharges into a downstream detention facility, or where overflows can be safely controlled and redirected into the downstream conveyance system.*
2. For **off-line filters**, the outlet structure must be designed to pass the 2-yr peak inflow rate, as determined using KCRTS with 15-minute time steps calibrated to specific ***site*** conditions.

   Intent: Overflow capacity is required for low-flow, high-volume storms which may exceed the storage capacity of the filter.
3. To the extent base flow conditions can be identified, **base flow** must be bypassed around the filter to keep the sand from remaining saturated for extended periods of time.

Filter Composition

A sand filter consists of three or four layers:

- Top layer (optional): grass seed or sod grown in sand
- Second layer: sand
- Third layer: geotextile fabric
- Fourth layer: underdrain system.

Sand Specifications

The sand in a filter shall consist of a medium sand with few fines meeting the size gradation (by weight) given in Table 6.5.2.C. The contractor must obtain a grain size analysis from the supplier to certify that

[36] Whether a WQ facility is designed as on-line (all flow going through the facility) or off-line (high flows bypassing the facility) is a choice made by the designer. Section 6.2.5 (p. 6-29) contains information on flow splitters for WQ facilities.

the No. 100 and No. 200 sieve requirements are met. *Note: Many sand mixes supplied locally meet this specification. However, standard backfill for sand drains (as specified in the Washington Standard Specifications 9-03.13) does not meet this specification and shall not be used for sand filters.*

TABLE 6.5.2.C SAND MEDIA SPECIFICATIONS	
U.S. Sieve Size	**Percent passing**
U.S. No. 4	95 to 100 percent
U.S. No. 8	70 to 100 percent
U.S. No. 16	40 to 90 percent
U.S. No. 30	25 to 75 percent
U.S. No. 50	2 to 25 percent
U.S. No. 100	Less than 4 percent
U.S. No. 200	Less than 2 percent

Geotextile Materials

Geotextile material requirements are summarized in Table 6.5.2.D (below).

TABLE 6.5.2.D GEOTEXTILE SPECIFICATIONS		
Geotextile Property	**Value**	**Test Method**
Grab Tensile Strength, min in machine and x-direction	250 lbs/160 lbs min.	ASTM D4632
Grab Failure Strain, in machine and x-machine direction	<50%/>50%	ASTM D4632
Seam Breaking Strength (if seams are present)	220 lbs/140 lbs min.	ASTM D4632 and ASTM D4884 (adapted for grab test)
Puncture Resistance	80 lbs/50 lbs min.	ASTM D4833
Tear Strength, min. in machine and x-machine direction	80 lbs/50 lbs min.	ASTM D4533
Ultraviolet (UV) Radiation stability	50% strength min., after 500 hrs. in weather meter	ASTM D4355
AOS	0.43 mm max. (#40 sieve)	ASTM D4751
Water Permittivity	0.5 sec – 1 min.	ASTM D4491

Notes:

- Minimum values should be in the weaker principal direction. All numerical values represent minimum average roll value (i.e., test results from any sampled lot shall meet or exceed the minimum values in the table). Stated values are for noncritical and nonsevere applications.
- AOS: Apparent Opening Size is the measure of the diameter of the pores on the geotextile.

DRAFT

Underdrain Systems

1. Several **underdrain systems** are acceptable:
   - A central collector pipe with lateral feeder pipes in an 8-inch drain rock bed
   - A central collector pipe with a geotextile drain strip in an 8-inch drain rock bed
   - Longitudinal pipes in an 8-inch drain rock bed, with a collector pipe at the outlet end.

   In smaller installations a single perforated pipe in 8 inches of drain rock may be adequate.
2. The **maximum perpendicular distance** between any two feeder pipes, or the edge of the filter and a feeder pipe, shall be 15 feet.

   Intent: This spacing is required to prevent the underdrain system from backing up into the sand filter during the early life of the filter when high filtration rates exist.
3. All pipe shall be placed with a **minimum slope** of 0.5 %.
4. The **invert of the underdrain outlet** shall be above the seasonal high groundwater level. The *seasonal high groundwater level* is the highest elevation of groundwater observed.

   Intent: The underdrain must be able to remove standing water from beneath the sand. If standing water remains, the sand will remain saturated. This could cause depletion of dissolved oxygen and reducing conditions in the sand, allowing some pollutants to become mobile and be released from the filter to downstream receiving waters.
5. **Cleanout** wyes with caps or junction boxes shall be provided at both ends of all collector pipes. Cleanouts shall extend to the surface of the filter.

   a) A valve box must be provided for access to the cleanouts.

   b) The cleanout assembly must be water tight to prevent short circuiting of the filter.

   Intent: Caps are required on cleanout wyes to prevent short-circuiting of water into the underdrain system when the pond fills with water.
6. If a **drain strip** is used for lateral drainage, the strip must be placed at the slope specified by the manufacturer but at least at 0.5%. All drain strip must extend to the central collector pipe. Drain strips installations must be analyzed for conveyance because manufactured products vary in the amount of flow they are designed to handle.
7. At least 8 inches of drain rock must be maintained over all underdrain piping or drain strip, and 6 inches must be maintained on either side to prevent damage by heavy equipment during maintenance.

   Note: If drain strip is used, it may be easier to install the central collector pipe in an 8-inch ***trench*** *filled with drain rock, making the cover over the drain strip and the collector pipe the same thickness. In this case the pipe shall be wrapped with geotextile to prevent clogging. Use the same geotextile specification as given in* Table 6.5.2.D, *Page 6-113*.
8. A **geotextile fabric** shall be used between the sand layer and the drain rock and be placed so that one inch of drain rock is above the fabric.

   Intent: The position of the geotextile fabric provides a **transition layer** of mixed sand and drain rock. A distinct layer of finely textured sand above a coarser one may cause water to pool at the interface and not readily drain downward due to the greater capillary forces in the finer material.

Underdrain Materials

1. Underdrain **pipe** shall be minimum 6 inch diameter perforated PVC, SDR 35. One acceptable specification for perforations is as follows: 2 rows of holes ($^1/_2$-inch diameter) spaced 6 inches apart longitudinally (max), with rows 120 degrees apart (laid with holes downward). Other drain pipe may be used if it adequately drains the filter.

DRAFT

2. **Drain rock** shall be $1^1/_2$ to $^3/_4$ -inch rock, washed and free from clay or organic material.
3. If a geotextile drain strip system is used, the attached **geotextile fabric** should not be used, or the fabric side should be positioned away from the sand blanket. Geotextile is already required between the sand and drain rock layers, and must meet the specifications in Table 6.5.2.D (p. 6-113) to avoid clogging the filter prematurely.

Access Roads & Setbacks

1. An access road shall be provided to the inlet and outlet of a sand filter for inspection and maintenance purposes. Requirements for access roads are the same as for detention ponds (see Section 5.3.1.1, "Design of Access Roads" and "Construction of Access Roads").
2. The location of the facility relative to ***site*** constraints (e.g., buildings, property lines, etc.) shall be the same as for detention ponds (see Section 5.3.1). See Section 6.2.3 (p. 6-21) for typical setback requirements for WQ facilities.

Grass Cover

1. **No top soil** shall be added to sand filter beds because fine-grained materials (e.g., silt and clay) reduce the hydraulic capacity of the filter.
2. **Growing grass** will require selecting species that can tolerate the demanding environment of the sand bed. Sand filters experience long periods of saturation during the winter wet season, followed by extended dry periods during the summer. Modeling predicts that sand filters will be dry about 60 percent of the time in a typical year. Consequently, vegetation must be capable of surviving drought as well as wetness.
   - The grasses and plants listed in Table 6.5.2.E (below) are good choices for pond sides. They are facultative (i.e., they can tolerate fluctuations in soil water). These species can generally survive approximately 1 month of submersion while dormant in the winter (until about February 15), but they can withstand only about 1 to 2 weeks of submersion after mid-February.
   - The lower portion of Table 6.5.2.E lists grass species that are good choices for the sand filter bottom. They can withstand summer drying and are fairly tolerant of infertile soils. In general, planting a mixture of 3 or more species is recommended. This ensures better coverage since tolerance of the different species is somewhat different, and the best adapted grasses will spread more rapidly than the others. Legumes, such as clover, fix nitrogen and hence can thrive in low-fertility soils such as sands. This makes them particularly good choices for planting the sand filter bed.
3. To prevent overuse that could compact and potentially damage the filter surface, **permanent structures** (e.g., playground equipment or bleachers) are not permitted. Temporary structures or equipment must be removed for filter maintenance.
4. If the sand filter is located in a Sensitive Lake Protection Area, low phosphorus **fertilizers** (such as formulations in the proportion 3: 1: 3 N-P-K or less) or a slow-release phosphorus formulation such as rock phosphate or bone meal should be used.

Recommended Design Features

The following design features should be incorporated into sand filter designs where ***site*** conditions allow:

1. A **horticultural specialist** should be consulted for advice on planting.
2. **Seed** should be applied in spring or mid to late fall unless irrigation is provided. If the filter is seeded during the dry summer months, surface irrigation is needed to ensure that the seeds germinate and survive. Seed should be applied at 80 lbs/acre.
3. Slow-release **fertilizers** may be applied to improve germination; however, see requirements above for sensitive lake protection areas.

DRAFT

4. A sand filter can add landscape interest and should be incorporated into the project **landscape design**. Interior side slopes may be stepped with flat areas to provide informal seating with a game or play area below. Perennial beds may be planted above the overflow water surface elevation. However, large shrubs and trees are not recommended because shading limits evaporation and can inhibit drying of the filter surface. In addition, falling leaves and needles can clog the filter surface, requiring more frequent maintenance. *Note: Examples of areas with stepped side slopes can be found at the Ballard Locks in Seattle and at Luther Burbank Park on Mercer Island.*

5. If **recreational use** is intended, such as for a badminton or volleyball play area, the interior side slopes of the filter embankment should be no steeper than 3:1 and may be stepped as shown in Figure 6.5.2.C (p. 6-123). Drainage tracts may be credited for up to 50 percent of the onsite recreation space requirement under certain conditions. Refer to King County Code 21A.14.180.D for recreation requirements (see Section 5.3.1.2).

DRAFT

TABLE 6.5.2.E RECOMMENDED PLANTS FOR SATURATED AREAS	
RECOMMENDED PLANTS FOR POND SIDES	
Scientific Name	**Common Name**
Agrostis alba	Redtop
Agrostis palustris	Creeping bentgrass
Alopecurus pratensis	Meadow foxtail
Calamagrostis nutkaensis	Pacific reed grass
Glyceria borealis	Northern mannagrass
Holcus lanatus	Common velvet grass
Poa palustris	Fowl bluegrass
Poa pratensis	Kentucky bluegrass
Juncus acuminatus	Tapertip rush
Juncus effusus	Soft rush
RECOMMENDED PLANTS FOR POND BOTTOM (SAND SURFACE)	
Agrostis tenuis	Colonial bentgrass (Highland strain good)
Buchloe dactyloides	Buffalo grass
Festuca elatior	Tall fescue
Festuca elatior "Many Mustang," "Silverado"	Dwarf tall fescues
Festuca rubra	Red fescue
Lolium perenne	Perennial ryegrass
Zoysia tenuifolia	Korean grass
Trifolium repens	White lawn clover
Note: Other grasses may be used if recommended by a horticultural or erosion control specialist for the specific site.	

DRAFT

Construction Considerations

1. If sand filters are put into service before construction of all parcels within the catchment is complete and all disturbed soil in the sand filter catchment has been stabilized, the filter will very likely clog prematurely. If individual lots are not stabilized, the options for **protection from upstream erosion** given in Section 5.4.1 for infiltration ponds may be used.

   An **alternative** is to install the sand filter pond including full excavation for the filter sand and underdrain layers, delaying placement of the sand and underdrains until the ***project site*** is stabilized. The partially complete sand filter will then function like a small wetpond. Later, the accumulated sediment should be cleaned and the underdrain and sand layers placed. A second alternative is to place only the gravel underdrain during the construction phase. Then clean the gravel and place the sand layer after the ***project site*** is stabilized.

   The County will not assume maintenance responsibility or release financial guarantees, however, unless the sand filter is installed per design and functioning properly. If the final sand layer cannot be completed before the typical two-year holding period for financial guarantees, the applicant may elect

to pay the County to clean and install the sand when the watershed is stabilized, or may arrange a smaller financial guarantee specifically for completion of the sand filter.

2. **Careful placement of the sand** is necessary to avoid formation of voids within the sand that could lead to short-circuiting, particularly around penetrations for underdrain cleanouts, as well as to prevent damage to the underlying geomembranes and underdrain system. Voids between the trench wall and geotextile fabric should also be avoided.

3. **Over compaction must be avoided** to ensure adequate filtration capacity. Sand is best placed with a low ground pressure tracked bulldozer (4.6 pounds per square inch or less ground pressure). The number of passes over sand fill should be minimized during placement; using low ground-pressure vehicles can minimize ground pressure and compaction.

4. After the sand layer is placed, water settling is recommended. Flood the sand with 10 to 15 gallons of water per cubic foot of sand.

Maintenance Considerations

Sand filters are subject to clogging by fine sediment, oil and grease, and other debris (e.g., trash and organic matter such as leaves). Filters and pretreatment facilities should be inspected every 6 months during the first year of operation. Inspections should also occur immediately following a storm event to assess the filtration capacity of the filter. Once the filter is performing as designed, the frequency of inspection may be reduced to once per year.

During an inspection the following features should be evaluated and maintained as needed:

1. Remove debris and sediment from the pretreatment facility when depth exceeds 12 inches.

2. Remove debris and sediment from the surface of the filter when accumulations exceed 0.5 inches.

3. Observe operation of the overflow and drawdown time in the filter. Frequent overflow through the grated "birdcage" or "jailhouse" window into the outlet structure or slow drawdown are indicators of plugging problems. Under normal operating conditions, a sand filter should completely empty within 9 to 24 hours following a storm event (i.e., after the inflow of runoff to the filter ceases), depending on pond depth. Generally, if the water level over the filter drops at a rate less than $^1/_2$-inch per hour ($V < {}^1/_2$-inch per hour), corrective maintenance is needed. Recommendations for improving sand filter performance are summarized below:

   a) Remove thatch accumulation in grass.

   b) Aerate the filter surface to improve permeability.

   c) Till the filter surface. Two separate passes following a criss-cross pattern (i.e., second pass at right angles to the first) are recommended.

   d) Replace upper 4 to 6 inches of grass and sand.

4. Experience with sand filters used for stormwater treatment in Austin, Texas, has shown that the sand becomes clogged and must be replaced every 4 to 10 years.

5. Rapid drawdown in the filter (i.e., greater than 12 inches per hour) indicates short-circuiting of the filter media. Inspect the cleanouts on the underdrain pipes and along the base of the embankment for leakage.

6. Formation of rills and gullies on the surface of the filter indicates improper function of the inlet flow spreader or poor sand compaction. Check for accumulation of debris on or in the flow spreader, and refill rills and gullies with sand.

Other maintenance practices that should be employed to ensure proper operation of the sand filter are summarized below:

1. Avoid use of excess fertilizers along the bottom or sides of a landscape sand filter.

DRAFT

2. Avoid driving heavy machinery or equipment on the sand filter to minimize compaction of the filter media and prevent the formation of ruts in the surface of the filter that could concentrate or channelize flow.
3. Mow grass as needed, and remove the cut grass from the sand filter.
4. Water the vegetation periodically when needed, especially during the summer dry season.
5. Discourage use of the sand bed by pets by installing signs reminding residents of scoop laws, planting barriers such as barberry, or providing other measures as appropriate.

❑ MODIFICATIONS FOR COMBINING WITH AN INFILTRATION POND

Where an infiltration pond is proposed for flow control, a sand filter (basic or large) may be combined with the infiltration pond by making the following modifications in design criteria:

1. The **"100-year Overflow Conveyance"** requirements for infiltration ponds (see Section 5.4.1) shall apply in place of the **"Overflow and Bypass"** requirements for sand filters.
2. The **"Filter Composition"** criteria are changed to eliminate the requirement for an underdrain system. The fourth layer of the filter becomes the native infiltrative soils.
3. The **"Underdrain System"** and **"Underdrain Materials"** criteria for sand filters are not applied. Water infiltrating through the sand layer need not be collected but may simply continue infiltrating downward into native soils.
4. The sides of the infiltration pond must be provided with a **treatment liner** up to the WQ design water surface elevation, at a minimum. See Section 6.2.4.2 (p. 6-27) for information on liners.

DRAFT

FIGURE 6.5.2.A SAND FILTER WITH LEVEL SPREADER

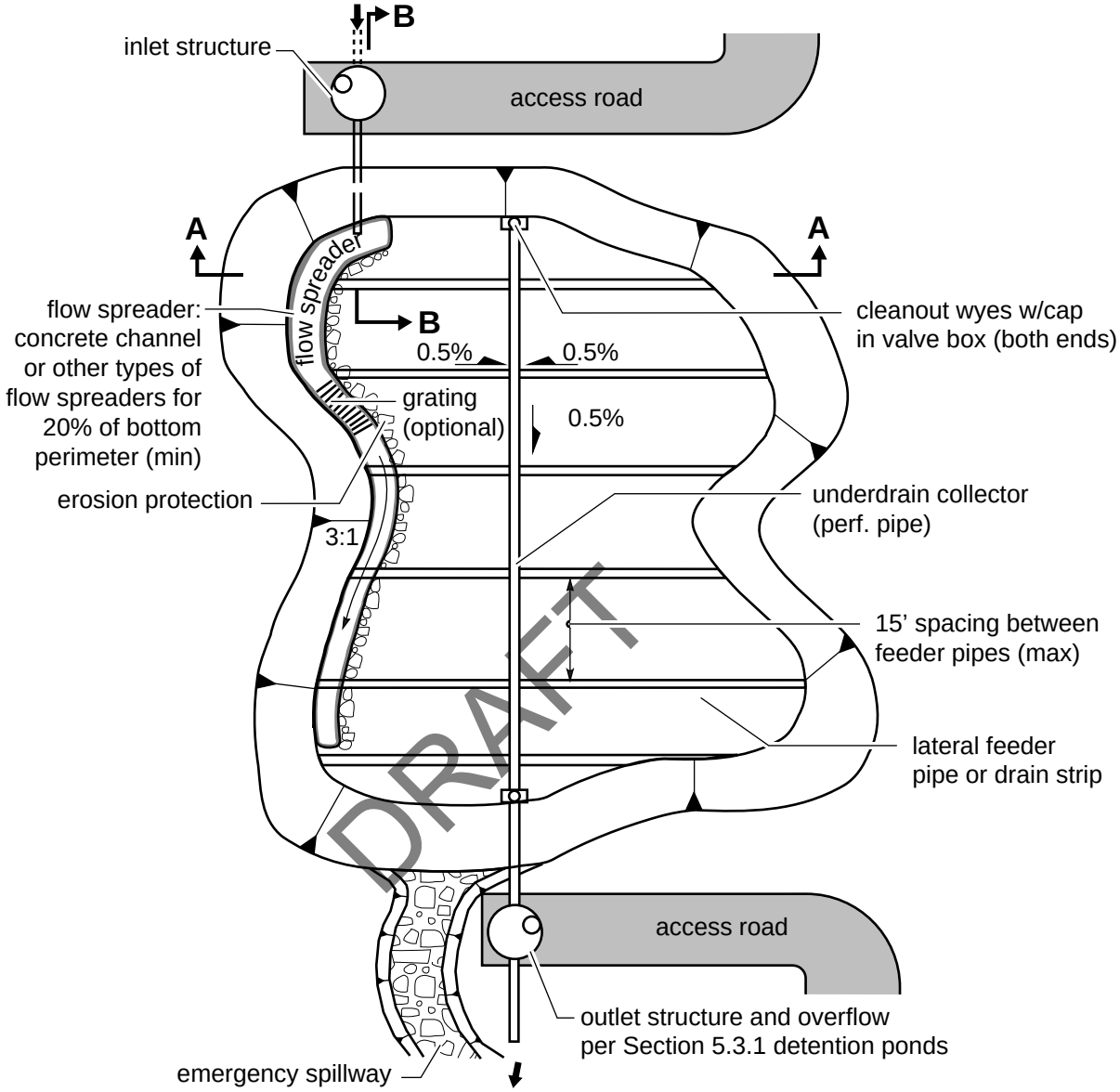

PLAN VIEW
NTS

FIGURE 6.5.2.A SAND FILTER WITH LEVEL SPREADER (*CONTINUED*)

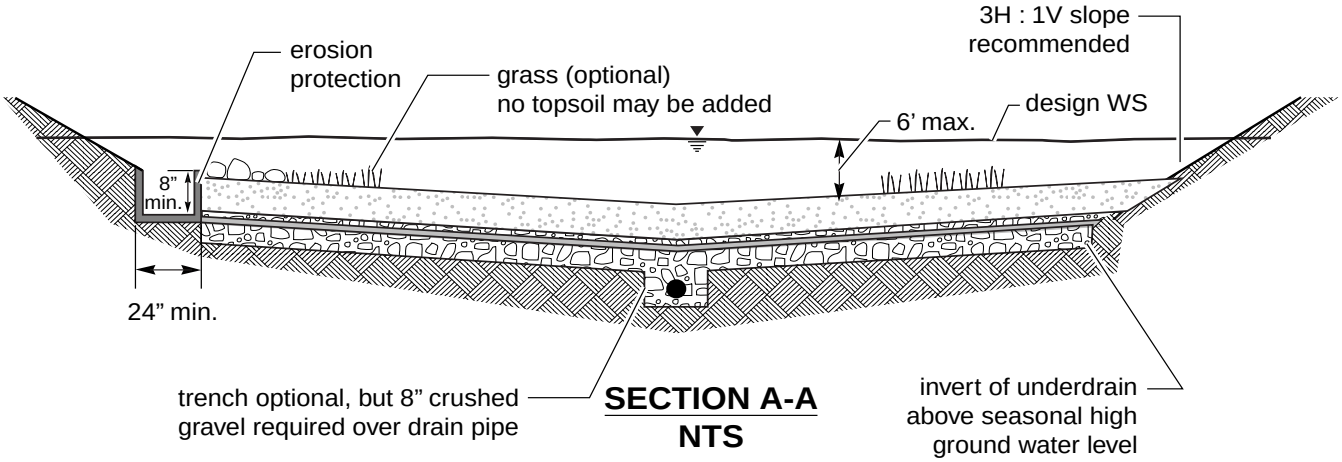

SECTION A-A
NTS

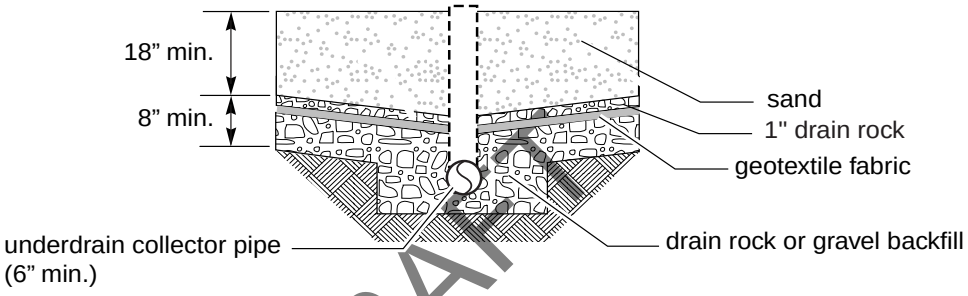

TRENCH DETAIL
NTS

DRAFT

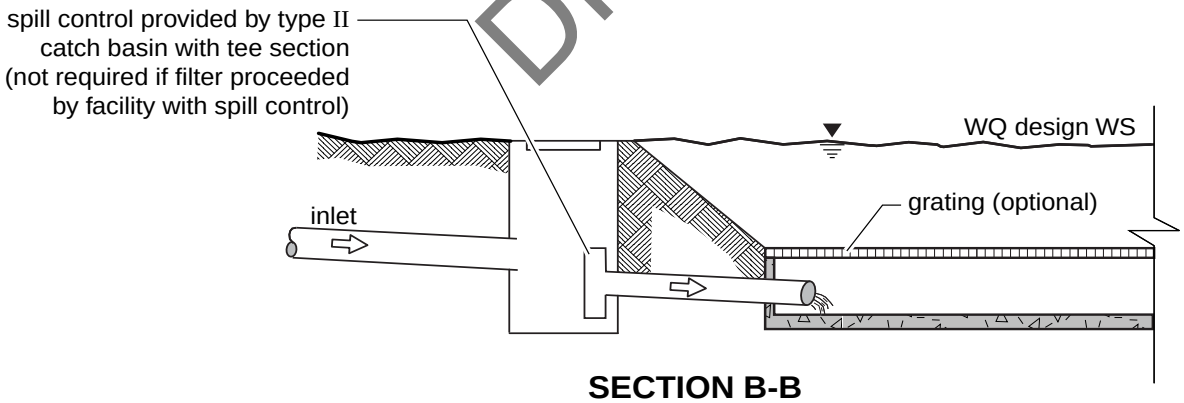

SECTION B-B
NTS

FIGURE 6.5.2.B SAND FILTER WITH PRETREATMENT CELL

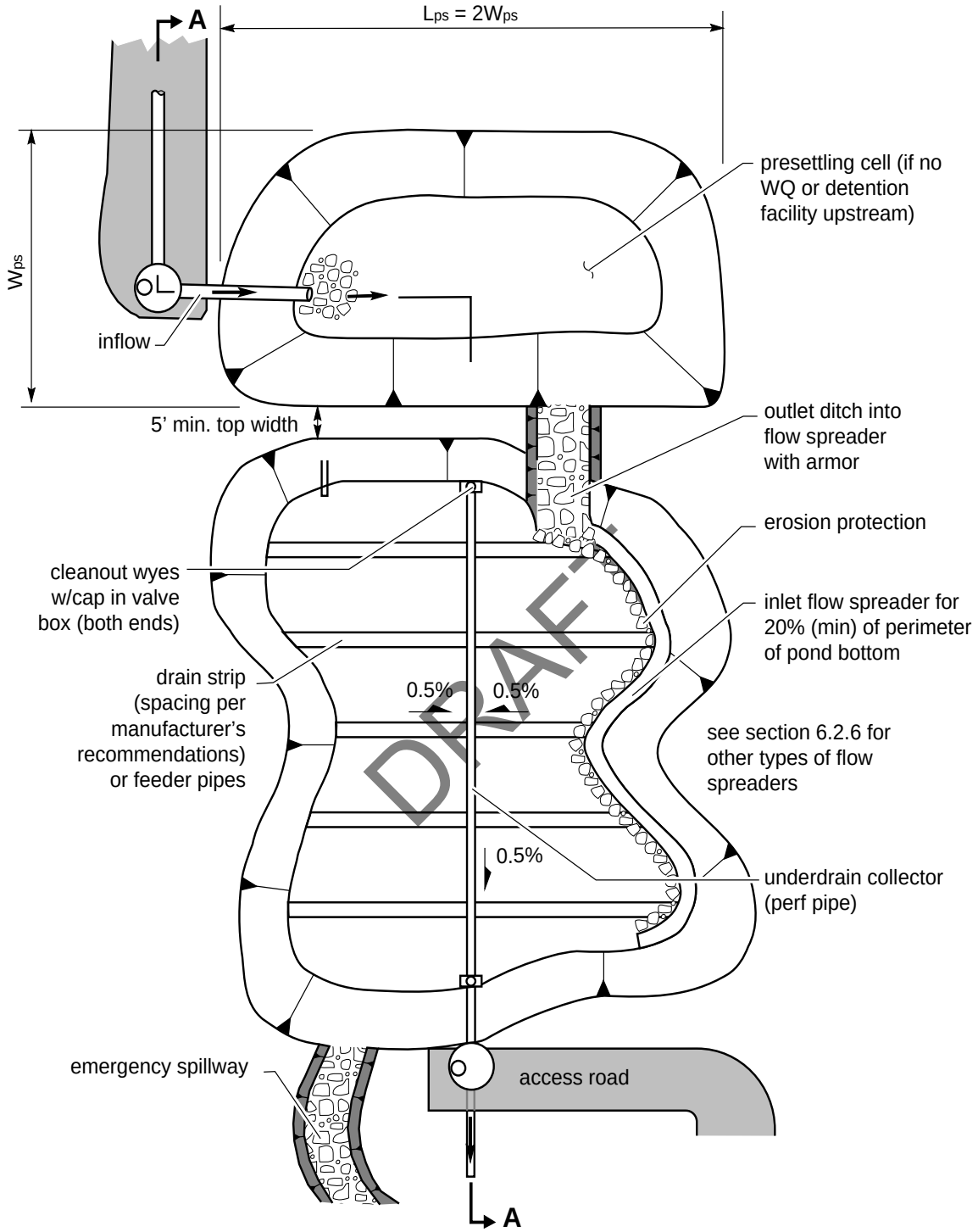

PLAN VIEW
NTS

DRAFT

FIGURE 6.5.2.B SAND FILTER WITH PRETREATMENT CELL (*CONTINUED*)

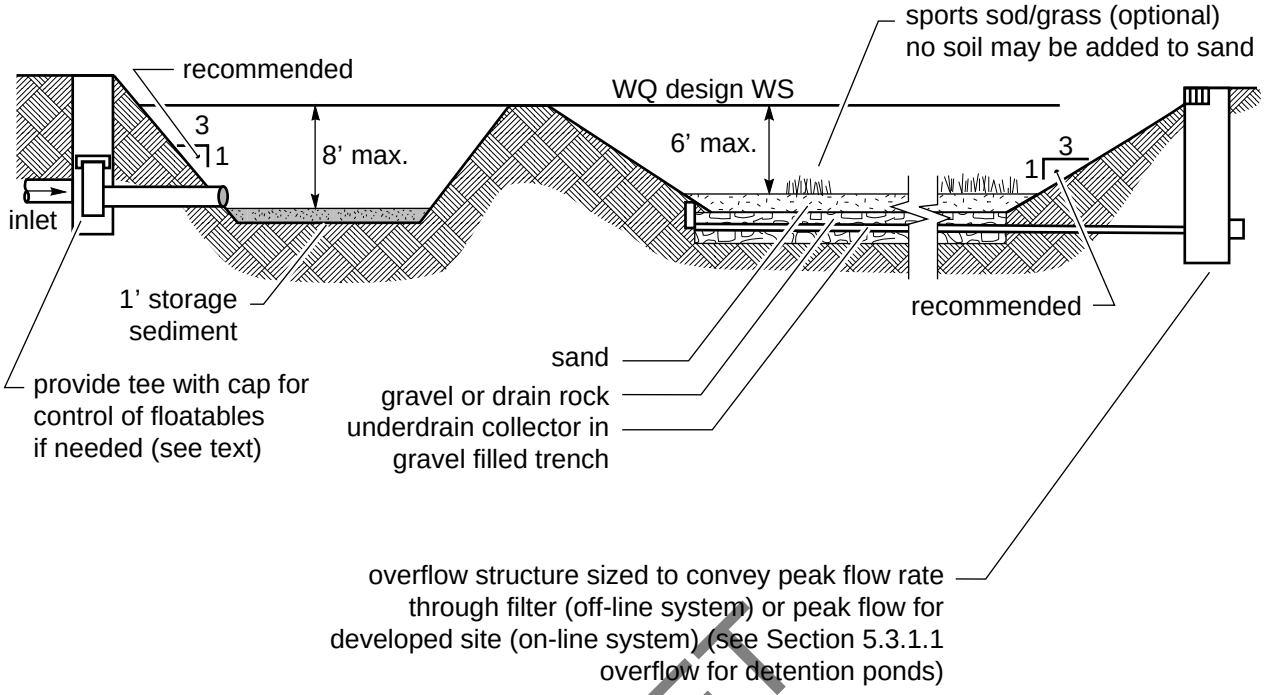

SECTION A-A
NTS

DRAFT

FIGURE 6.5.2.C SCHEMATIC OF STEPPED SIDE SLOPES

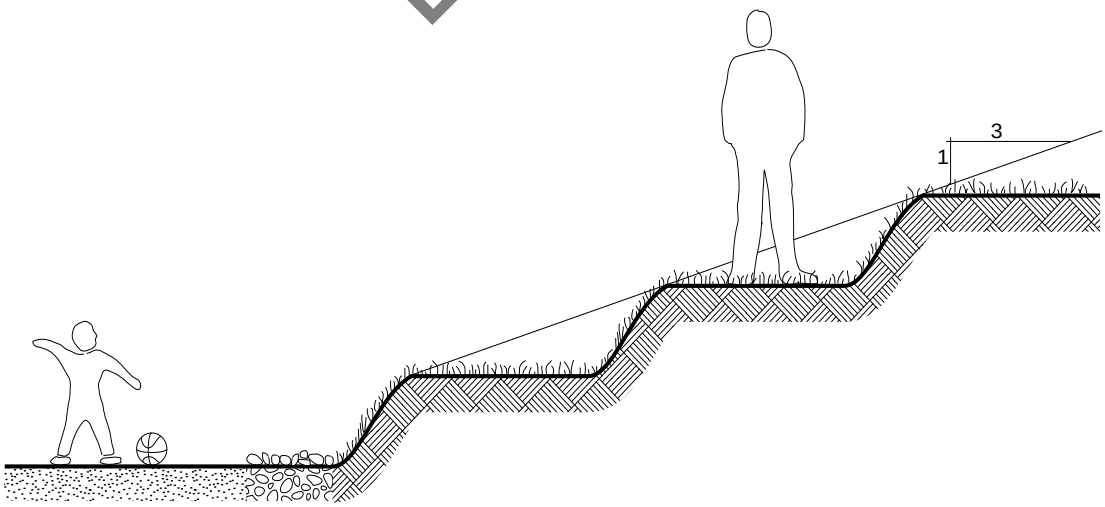

SECTION
NTS

6.5.3 SAND FILTER VAULTS

A *sand filter vault* is similar to an open sand filter except that the sand layer and underdrains are installed below grade in a vault. Like a sand filter, a sand filter vault may be sized as either a basic or a large facility to meet different water quality objectives. The **basic sand filter vault** is designed to meet the Basic WQ menu goal of 80% TSS removal for the water quality design flow. The **large sand filter vault** is expected to meet the Sensitive Lake Protection menu goal of 50% total phosphorus removal.

Applications and Limitations

A sand filter vault may be used on ***sites*** where **space limitations preclude the installation of above ground facilities**. In highly urbanized areas, particularly on redevelopment and infill projects, a vault is a viable alternative to other treatment technologies that require more area to construct.

Like sand filters, sand filter vaults are **not suitable for areas with high water tables** where infiltration of groundwater into the vault and underdrain system will interfere with the hydraulic operation of the filter. Soil conditions in the vicinity of the vault installation should also be evaluated to identify special design or construction requirements for the vault.

It is desirable to have an **elevation difference of 4 feet between the inlet and outlet** of the filter for efficient operation. Therefore, ***site*** topography and drainage system hydraulics must be evaluated to determine whether use of an underground filter is feasible.

Because the surface of a sand filter vault is prone to clogging from sediment and other debris, this facility **should not be used in areas where heavy sediment loads are expected**.

Refer to the WQ menus, Section 6.1 (p. 6-3), for information on how sand filter vaults may be used to meet Core Requirement #8.

DRAFT

6.5.3.1 METHODS OF ANALYSIS

The **methods of analysis** for basic and large sand filter vaults are identical to the methods described for basic and large sand filters. Follow the procedures described in Section 6.5.2.1 (p. 6-105).

6.5.3.2 DESIGN CRITERIA

General **design concepts** for sand filter vaults are shown in Figure 6.5.3.A (p. 6-128).

Sand Filter Geometry

Same as for sand filters (see page 6-112).

Pretreatment, Flow-Spreading, and Energy Dissipation

1. See general presettling and pretreatment requirements for filtration facilities, Section 6.5.1, p. 6-103.
2. A **flow spreader** shall be installed at the inlet to the filter bed to evenly distribute incoming runoff across the filter and prevent erosion of the filter surface.
3. For **vaults with presettling cells**, the presettling cells shall be constructed so that the **divider wall** extends from the floor of the vault to the WQ design water surface and is water tight
4. The flow spreader shall be positioned so that the **top of the spreader** is no more than 8 inches above the top of the sand bed (and at least 2 inches higher than the top of the inlet pipe if a pipe and manifold distribution system is used). See Section 6.2.6 (p. 6-33) for details on flow spreaders. For **vaults with presettling cells**, a **concrete sump-type flow spreader** (see Figure 6.2.6.B, p. 6-36) shall be built into or affixed to the divider wall. The sump shall be a minimum of 1 foot wide and extend

the width of the sand filter. The downstream lip of the sump shall be no more than 8 inches above the top of the sand bed.

5. Flows shall enter the sand bed by **spilling over the top of the wall into a flow spreader pad**, or alternatively a **pipe and manifold system** may be designed and approved at the discretion of DDES to deliver water through the wall to the flow spreader. *Note: Water in the first or presettling cell is dead storage. Any pipe and manifold system designed must retain the required dead storage volume in the first cell, minimize turbulence, and be readily maintainable.*
6. If a pipe and manifold system is used, the **minimum pipe size** shall be 8 inches. Multiple inlets are recommended to minimize turbulence and reduce local flow velocities.
7. **Erosion protection** shall be provided along the first foot of the sand bed adjacent to the spreader. Geotextile weighted at the corners with sand bags, quarry spalls, or other suitable erosion control may be used.

Overflow and Bypass Structures

Same as for sand filters (see page 6-112).

Filter Composition

The filter bed shall consist of three layers as follows:

- Top layer: sand
- Second layer: geotextile fabric
- Third layer: underdrain system.

Sand Specifications and Geotextile Materials

Same as for sand filters (see page 6-113).

Underdrain Systems and Underdrain Materials

Same as for sand filters (see page 6-114).

DRAFT

Vault Structure

1. Sand filter vaults are typically designed as on-line (flow-through) systems with a flat bottom under the filter bed.
2. If a presettling cell is provided, the **cell bottom** may be longitudinally level or inclined toward the inlet. To facilitate sediment removal, the bottom shall also slope from each side towards the center at a minimum of 5%, forming a broad "v." *Note: More than one "v" may be used to minimize cell depth.*

   Exception: The bottom of the presettling cell may be flat rather than v-shaped if **removable panels** are provided over the entire presettling cell. Removable panels shall be at grade, have stainless steel lifting eyes, and weigh no more than 5 tons per panel.
3. One foot (average) of **sediment storage** must be provided in the presettling cell.
4. Where pipes enter and leave the presettling cell below the WQ design water surface, they shall be **sealed** using a non-porous, non-shrinking grout.
5. If an **oil retaining baffle** is used for control of floatables in the presettling cell, it must conform to the following:
   a) The baffle shall extend from 1 foot above to 1 foot below the WQ design water surface (minimum requirements) and be spaced a minimum of 5 feet horizontally from the inlet.
   b) Provision for passage of flows in the event of plugging shall be provided.

c) An access opening and ladder shall be provided on both sides of the baffle into the presettling cell.

6. Sand filter vaults shall conform to the **"Materials"** and **"Structural Stability"** criteria specified for **detention vaults** in Section 5.3.3.

7. The **arch culvert sections** allowed for wetvaults **shall not be used** for sand filter vaults. Free access to the entire sand bed is needed for maintenance.

Access Requirements

Same as for **detention vaults** (see Section 5.3.3) except for the following **modifications:**

1. For facilities maintained by King County, removable panels must be provided over the entire sand bed. Panels shall be at grade, have stainless steel lifting eyes, and weigh no more than 5 tons per panel. Concrete bridge decking or industrial decking are options. If within the roadway, the panels must meet the traffic loading requirements of the King County road standards.

2. A minimum of 24 square feet of ventilation grate must be provided for each 250 square feet of sandbed surface area. Grates may be located in one area if the sand filter is small, but placement at each end is preferred. Small grates may also be dispersed over the entire sand bed.

   Intent: Grates are important to allow air exchange above the sand. Poor air exchange will hasten anoxic conditions which may result in release of pollutants such as phosphorus and metals and cause objectionable odors.

Access Roads, Right of Way, and Setbacks

Same as for detention vaults (see Section 5.3.3).

Recommended Design Features

The following design features should be incorporated into sand filter vaults where feasible but are not specifically required:

1. The **floor of the presettling cell** should be **sloped toward the inlet** to allow for sediment accumulation and ease of cleaning.

2. A **geotextile fabric** is recommended over the sand bed to make sand bed maintenance easier. If used, the geotextile should be a flexible, high-permeability, three-dimensional matrix of the kind commonly used for erosion control. Sand bags should be used at 10 to 15 foot intervals to hold the geotextile in place.

3. **Additional grates** are recommended instead of solid panels to increase air contact with the sand bed.

Construction Considerations

Same as for sand filters (see page 6-117) plus, upon completion of installation, the vault shall be thoroughly cleaned and flushed prior to placement of sand and drain rock.

Maintenance Considerations

Maintenance considerations for sand filter vaults are similar to those described for sand filters (see p. 6-118). Maintenance practices need to be modified somewhat due to the sand filter being in a vault, including the use of safe confined space entry procedures.

DRAFT

❑ MODIFICATIONS FOR COMBINING WITH AN INFILTRATION VAULT

Where an infiltration vault is proposed for flow control, a sand filter vault (basic or large) may be combined with the infiltration facility by making the following modifications in design criteria:

1. The **"100-year Overflow Conveyance"** requirements for infiltration ponds (see Section 5.4.1) shall apply in place of the **"Overflow and Bypass"** requirements for sand filter vaults.
2. The **"Filter Composition"** criteria are changed to eliminate the requirement for an underdrain system. The third layer of the filter becomes the native infiltrative soils.
3. The **"Underdrain System"** and **"Underdrain Materials"** criteria for sand filter vaults are not applied. Water infiltrating through the sand layer need not be collected but may simply continue infiltrating downward into native soils.
4. **"Access requirements"** for grating may be reduced at the discretion of the design and review engineers.

   Intent: when water infiltrates into the soil directly without being collected by an underdrain system, the concern for pollutant release diminishes. Ventilation for odor control is, then, the only concern.

DRAFT

FIGURE 6.5.3.A SAND FILTER VAULT

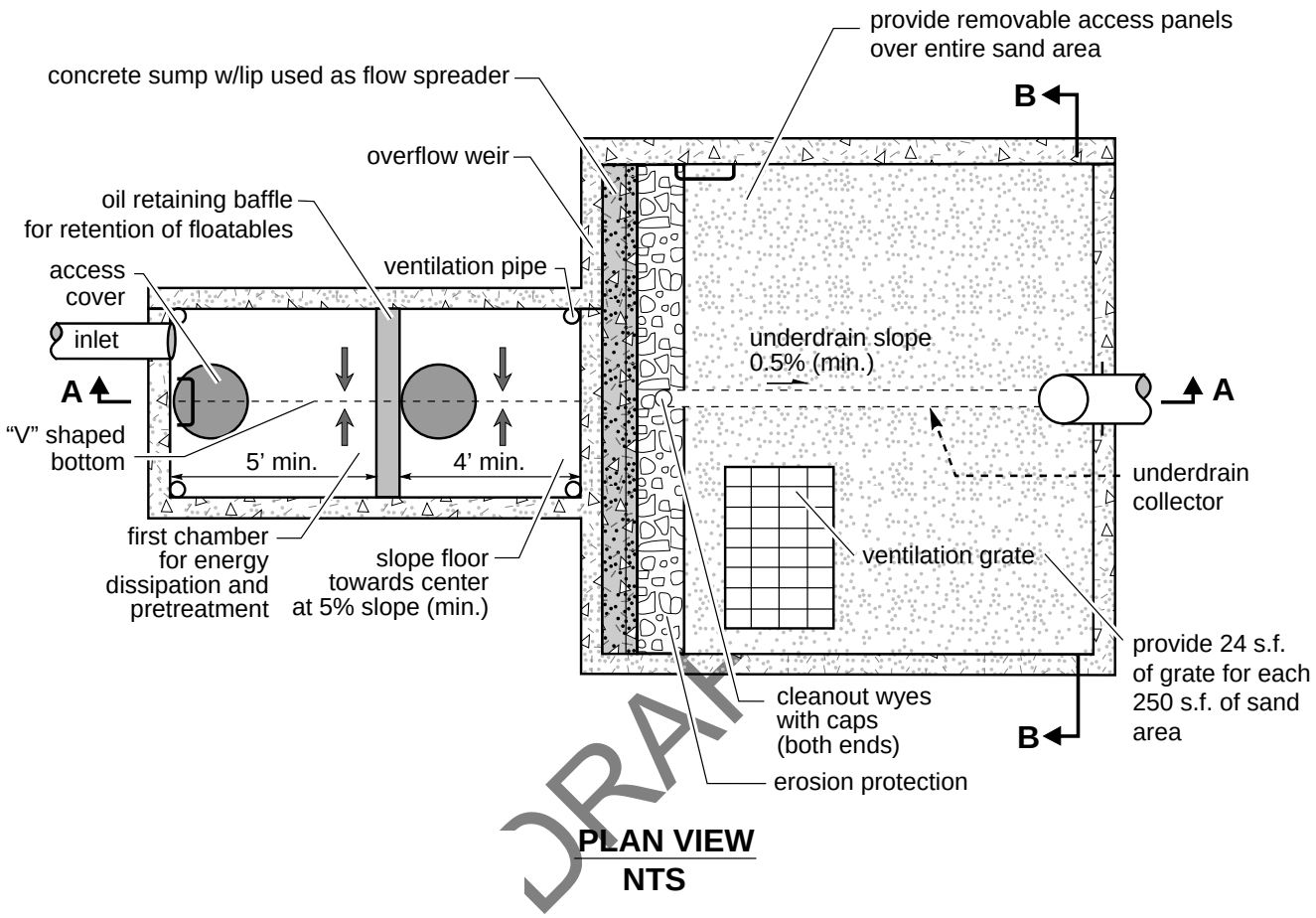

FIGURE 6.5.3.A SAND FILTER VAULT (*CONTINUED*)

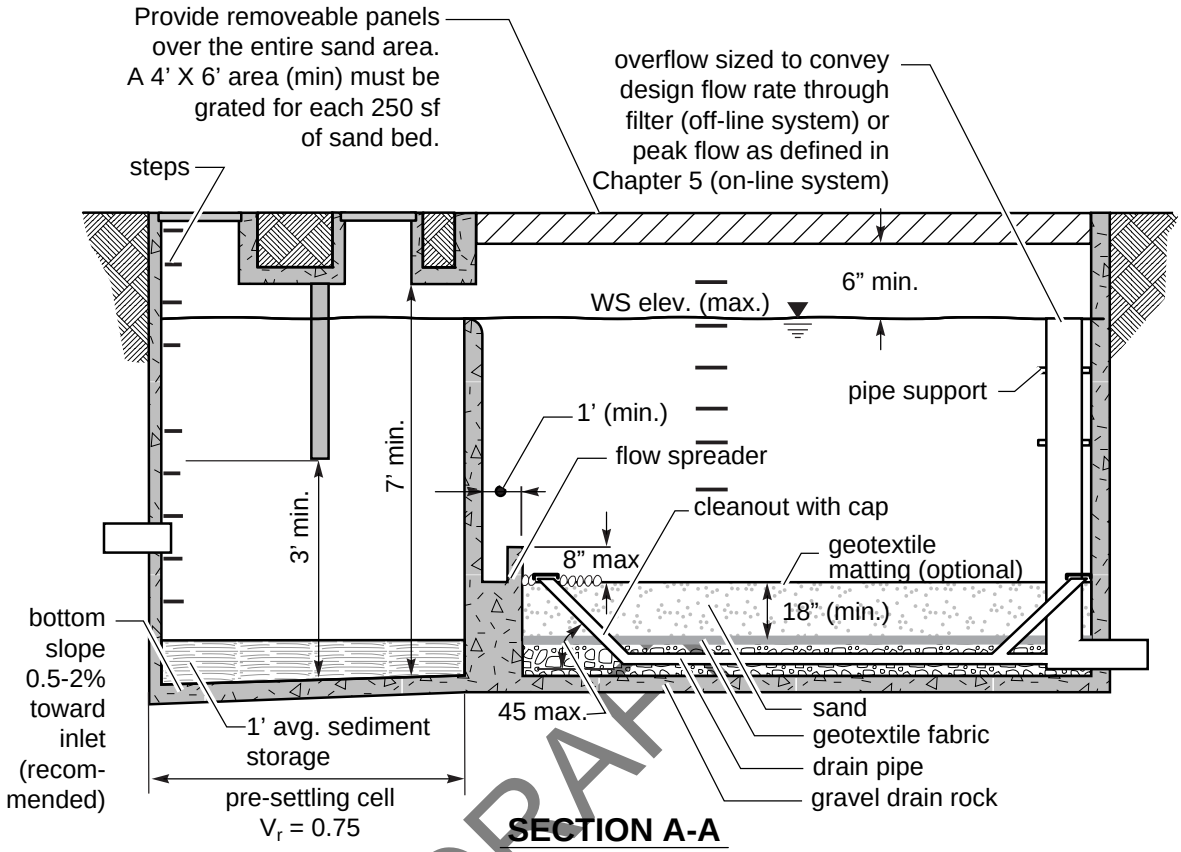

SECTION A-A
NTS

DRAFT

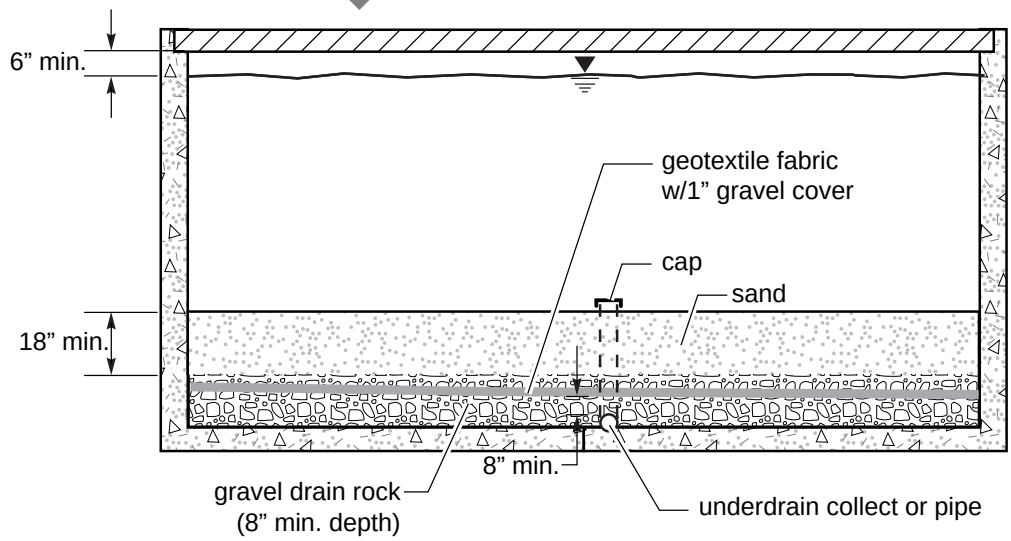

SECTION B-B
NTS

6.5.4 LINEAR SAND FILTERS

Linear sand filters are typically long, shallow, rectangular vaults. The vaults consist of two cells or chambers, one for settling coarse sediment from the runoff and the other containing sand. Stormwater flows into the second cell via a weir section that also functions as a flow spreader to distribute the flow over the sand. The outlet consists of an underdrain pipe system that connects to the storm drain system. As with other sand filters, linear filters come in two sizes, basic and large. The **basic linear sand filter** is designed to meet the Basic WQ menu goal of 80% TSS removal for the water quality design flow. The **large linear sand filter** is expected to meet the Sensitive Lake Protection menu goal of 50% total phosphorus removal.

Applications and Limitations

The linear sand filter is used for stormwater flows for two different treatment purposes:

1. To provide basic or second-tier water quality treatment, and
2. To treat runoff from ***high-use sites*** (i.e., ***sites*** generating higher than typical concentrations of oil and grease).

Linear sand filters are **best suited for treating small drainages** (less than 5 acres), particularly long, narrow areas. The goal is to keep linear sand filters fairly shallow and narrow in width. A linear sand filter may be located along the perimeter of a paved impervious surface or may be installed downstream of a filter strip where additional treatment is needed. If used for oil control, the filter should be located upstream from the main water quality treatment facility (i.e., wetpond, biofiltration swale, or combined detention and wetpond).

Consult the water quality menus in Section 6.1 (p. 6-3) for information on how linear sand filters may be used to meet Core Requirement # 8 or Special Requirement #5.

DRAFT

6.5.4.1 METHODS OF ANALYSIS

A linear sand filter is sized based on the infiltration rate of the sand and the amount of runoff draining to the facility. The filter is sized to infiltrate the sand filter design flow without significant ponding above the sand. The sizing methods specified below are for both the basic and large linear sand filter.

Step 1: Identify the size of sand filter needed, either basic or large. Consult the water quality menus, Section 6.1 (p. 6-3) to determine which size is needed. A basic linear sand filter is sized to permit 90 percent of the runoff volume to pass through the filter. A large linear sand filter allows 95 percent of the volume to pass through the filter. For oil control purposes, use the basic sand filter size.

Step 2: Determine the rainfall region and regional scale factor. Regional scale factors are used to account for differences in rainfall at locations distant from the two gage locations in King County, Sea-Tac Airport and Landsburg. Refer to the precipitation scaling map in Chapter 3, Figure 3.2.2.A, to determine the scale factor for the project area.

Step 3: Determine *site* characteristics. Determine the total number of impervious acres and the total number of grass acres draining to the sand filter. Determine whether the ***project site*** is on till or outwash soils. Refer to Table 3.2.2.B in Chapter 3 to determine which soil types are considered till and which are considered outwash.

Step 4: Calculate the minimum required surface area for the linear sand filter. Determine the sand filter area by multiplying the values in Table 6.5.4.A (p.6-131) by the tributary acreages from Step 3 using the following equation:

$$A_{sf} = 0.7\, C_s\, (T_i A_i + T_{tg} A_{tg} + T_{og} A_{og}) \qquad (6\text{-}20)$$

where A_{sf} = sand filter area (sf)
0.7 = adjustment factor to account for routing effect on size
C_s = regional scale factor (unitless) from Step 2
$T_{i,tg,\,og}$ = tributary area per soil/cover type (acres)
$A_{i,tg,\,og}$ = filter area per soil/cover type (sf/acre) from Table 6.5.4.A.

The values in Table 6.5.4.A (below) are identical to those in Table 6.5.2.A for the simple sizing method but are repeated below for convenience. For depths less than 1 foot, the detailed routing method must be used.

Linear sand filters may also be sized using the detailed routing procedure of Section 6.5.2.1 (p. 6-105). It is expected that filters designed with the detailed routing method would be narrower than those sized using Table 6.5.4.A.

TABLE 6.5.4.A
LINEAR SAND FILTER AREA INCREMENTS FOR SEA-TAC AND LANDSBURG

		Soil/Cover Types [filter area (sf) / tributary area (acres)]		
Region and Treatment Goal	**Max. Water Depth (ft)**	A_i **Impervious**	A_{fg} **Till grass**	A_{og} **Outwash grass**
SeaTac Basic	1	1711	360	314
Landsburg Basic	1	1844	405	355
SeaTac Large	1	2654	629	550
Landsburg Large	1	2926	674	590

DRAFT

Step 5: Size the sediment cell. The sediment cell width should be set after the sand filter width is determined. Use Table 6.5.4.B below to set the width of the sediment cell. If another WQ facility precedes the sand filter, the sediment cell may be waived.

TABLE 6.5.4.B SEDIMENT CELL WIDTH, LINEAR SAND FILTER

If Sand filter width is:	Width of sediment cell shall be:
1 to 2 feet	12 inches
2 to 4 feet	18 inches
4 to 6 feet	24 inches
Over 6 feet	One-third of sand cell width

Example

A ***site*** in the White Center area has 1 acre of impervious area and 0.2 acres of till grass draining to the sand filter (1 foot of head above the filter). The designer wants to install a linear sand filter along a 200-foot parking area. The required sand area for a basic size linear sand filter would be found as follows:

Site Areas		Table 6.5.4.A values for SeaTac, basic size		
1 acres	x	1711 sf/acre	=	1711 sf
+ 0.2 acres	x	360 sf/acre	=	72 sf
			=	1783 sf

Multiply 1783 square feet by the C_s for the White Center area, which (from Figure 3.2.2.A) is 1.0 times the SeaTac area increments. Also multiple that result by the 0.7 adjustment factor.

1783 sf x 1.0 x 0.7 = 1248 sf

The required sand bed area is therefore **1248 square feet.** Divide 1248 square feet by 200 feet, the length of the filter for the project, to get a required sand bed width of 6.2 feet. The sediment cell would be one-third of 6.2 feet, or about 2 feet.

Note: To save space, the designer could cover the sand filter with grating that would bear traffic load and use the space for parking. The designer could also hire an engineer to perform the KCRTS detailed routing method. With this method, the sand bed width could be reduced to about 5 feet.

For background on the derivation of numbers in Table 6.5.4.A, refer to the "Background" discussion (p. 6-105) for the sand filter.

DRAFT

6.5.4.2 DESIGN CRITERIA

Linear sand filter details are shown in Figure 6.5.4.A (p. 6-134).

Geometry, Sizing, and Overflow

1. A linear sand filter shall consist of **two cells** or chambers, a sediment cell and a sand bed cell, divided by a low divider wall. If the sand filter is preceded by another WQ facility, and the flow enters the sand filter as sheet flow, the sediment cell may be waived.
2. Stormwater may enter the sediment cell by sheet flow or via a piped inlet.
3. **Minimum inside width** of the sand filter cell shall be 1 foot. **Maximum width** shall be 15 feet.
4. The **divider wall** must be level and extend 12 inches (max) above the sand bed.
5. The **sand filter bed** shall be 12 inches deep. An 8-inch layer of **drain rock with perforated drainpipe** shall be installed beneath the sand layer.
6. The **drainpipe** shall have a minimum diameter of 6 inches and be wrapped in **geotextile** and sloped 0.5 % (min) to drain.
7. For design, the **maximum depth of ponding** over the sand shall be 1 foot.
8. If separated from traffic areas, a linear sand filter may be **covered or open**, but if covered, the cover must be removable for the entire length of the filter. Covers must be grated if flow to the filter is from sheet flow.

9. A linear sand filter shall have an **emergency overflow route**, either surface overland, tightline, or other structure for safely controlling the overflow, and shall meet the conveyance requirements specified in Chapter 1.

Structure Specifications

1. A linear sand filter vault shall be concrete (precast/prefabricated or cast-in-place). The concrete must conform to the **"Material"** requirements for **detention vaults** in Section 5.3.3.
2. At the discretion of DDES, the sediment cell may be made of materials other than concrete, provided water can be evenly spread for uniform delivery into the sand filter cell.
3. Where linear sand filters are located in traffic areas, they must meet the **"Structural Stability"** requirements specified for **detention vaults** in Section 5.3.3. The sediment cell shall have a **removable grated cover** that meets HS-25 traffic loading requirements. The cover over the sand filter cell may be either solid or grated.
4. A minimum of 24 square feet of **ventilation grate** must be provided for each 250 square feet of sandbed surface area. Grates located over the sediment chamber are preferred. Grates may be in one central location or dispersed over the entire sand bed. Vertical grates may also be used such as at a curb inlet. If a sediment chamber is not required, ventilation shall be provided over the sandbed.

   Intent: Grates are important to allow air exchange above the sand. Poor air exchange will hasten anoxic conditions which may result in release of pollutants such as phosphorus and metals and cause objectionable odors.

Sand Specifications

Same as for sand filters (see Table 6.5.2.C, p. 6-113).

Geotextile Materials

Same as for sand filters (see Table 6.5.2.D, p. 6-113).

Underdrain Materials

Same as for sand filters (see page 6-114).

Access Roads, Right of Way, and Setbacks

Same as for detention vaults (see Section 5.3.3).

Construction Considerations

If put into service before the ***project site*** is stabilized, placement of the sand layer should be delayed, and the linear sand filter may be used with the gravel layer only. The gravel layer must be replaced and the vault cleaned when the ***project site*** is stabilized and the sand bed installed. King County will not assume maintenance responsibility or release financial guarantees until the final installation is complete.

Maintenance Considerations

Maintenance considerations for linear sand filters are similar to those for basic sand filters (see Section 6.5.2.2) except sediment should be removed from the sediment cell when the depth exceeds 6 inches.

DRAFT

FIGURE 6.5.4.A LINEAR SAND FILTER

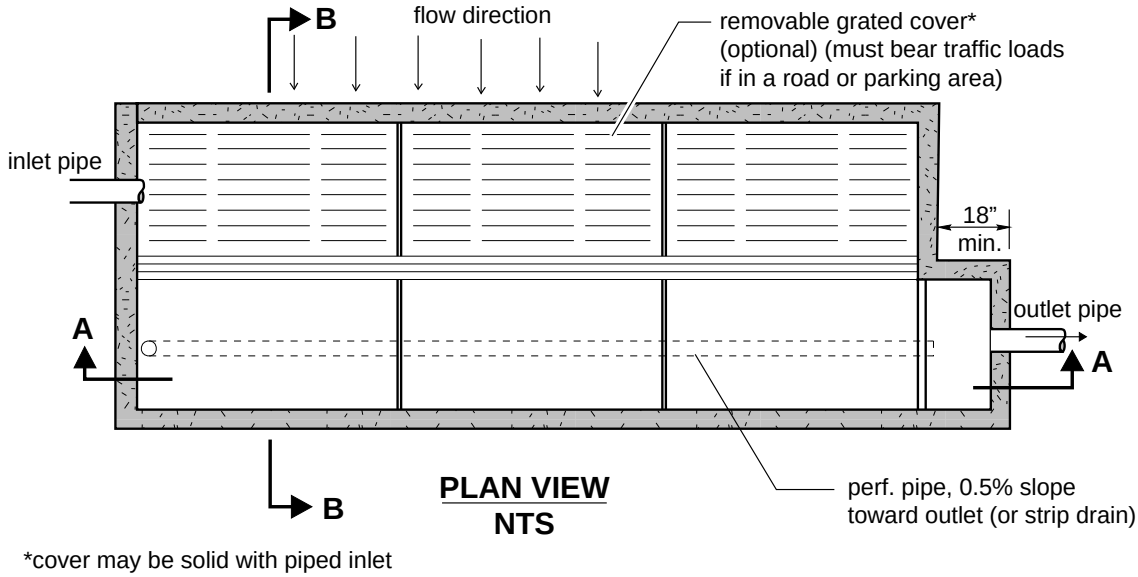

PLAN VIEW
NTS

*cover may be solid with piped inlet

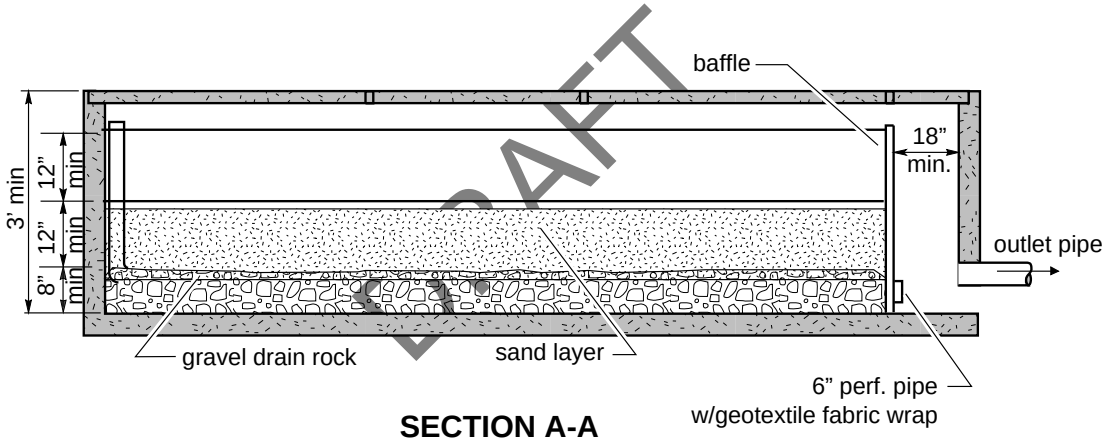

SECTION A-A
NTS

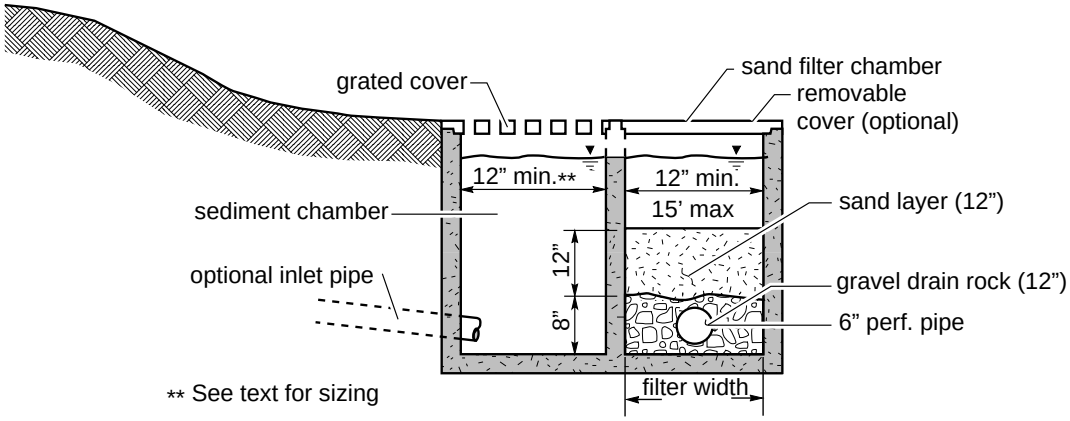

SECTION B-B
NTS

6.5.5 STORMFILTER®

The process and apparatus of treating stormwater runoff by passing the runoff through leaf compost material (CSF® leaf media) is patented (Patent Number 5,322,629) by Stormwater Management, a company based in Portland, Oregon. A StormFilter® removes pollutants through filtration, ion exchange, adsorption, and microbial degradation. Figure 6.5.5.A (p. 6-137) gives a schematic representation of a StormFilter®.

Applications and Limitations

A StormFilter® with CFS® media may be used as a second water quality facility in an Enhanced Basic treatment train (per Table 6.1.2.A, p. 6-7) or a bog protection treatment train (per Table 6.1.4.A, p. 6-13) StormFilters® are especially effective in situations where removal of metal contaminants is desired. **StormFilters® may not be used as stand-alone facilities** until more experience is gained with the system, particularly with potential for plugging or blinding and maintenance requirements.

The StormFilter® may be filled with several types of filter media, including perlite, zeolite, and iron-infussed media. Until additional performance data is collected, **only the CFS® media is acceptable**. Other types of media may be allowed with an Experimental Design Adjustment. The perlite/zeolite media does not meet the Lake Protection Standard.

Consult the water quality menus in Section 6.1 (p. 6-3) for specific information on how a StormFilter® may be used to meet Core Requirement # 8.

DRAFT

6.5.5.1 METHODS OF ANALYSIS

StormFilter® sizing is based on the water quality design flow (see Section 6.2.1, p. 6-17). Since the process and the compost are patented, Stormwater Management personnel will configure a StormFilter® based on the design flow provided and specific ***site*** characteristics. In King County, the WQ design flow should be based on the KCRTS modeled flows, described in Chapter 3, rather than on other flow-estimation methods. An accurate description of land use and potential sediment and pollutant loading sources shall also be provided to Stormwater Management personnel, who consider these factors in sizing. The typical size of the precast unit can be estimated based on the water quality design flow in Table 6.5.5.A (below).

TABLE 6.5.5.A TYPICAL PRECAST FILTER VAULT SIZES BASED ON DESIGN FLOW

Design Flow (cfs)	Vault Size
up to 0.1	Manhole StormFilter®
0.11 to 0.2	6' x 8'
0.21 to 0.37	6' x 12'
0.37 to 0.87	8' x 16'
0.88 to 1.1	8' x 18'
greater than 1.11	multiple precast vaults, panel, or cast in place

6.5.5.2 DESIGN CRITERIA

Figure 6.5.5.A (p. 6-137) illustrates the general configuration of a typical StormFilter® unit using standard precast concrete vaults.

General

Vaults used for a StormFilter® shall conform to the **"Materials"** and **"Structural Stability"** requirements specified for detention vaults (see Section 5.3.3).

Pretreatment

This manual limits use of a StormFilter® to the second or third facility in a treatment train. If used in another situation, an approved adjustment is required (see Section 1.4). Providing adequate pretreatment and performance monitoring are key to obtaining an adjustment approval. See Section 6.5.1, p. 6-103 for general pretreatment requirements.

Access Requirements

1. **Access must be provided** by either 3' X 9' access doors or removable panels to allow for removal and replacement of the filter cartridges. Removable panels, if used, shall be at grade, have stainless steel lifting eyes, and weight no more than 5 tons per panel.
2. Access to the **inflow and outlet cells** must also be provided.
3. **Ladder access** is required when vault height exceeds 4 feet.
4. **Locking lids** shall be provided as specified for detention (see Section 5.3.3).

Access Roads, Right of Way, and Setbacks

Same as for detention vaults (see Section 5.3.3).

Construction Considerations

Installation of a StormFilter® shall follow the manufacturer's recommended procedures.

Maintenance Requirements

Maintenance needs vary from ***site*** to ***site*** based on the type of land use activity, implementation of source controls, and weather conditions. StormFilters® shall be inspected quarterly or at a frequency recommended by the supplier. Inspection and maintenance shall include the following:

1. The operation and maintenance instructions from the manufacturer shall be kept along with an inspection and maintenance log. The **maintenance log** shall be available for review by County inspectors.
2. **Routine maintenance** shall include inspecting for debris, vegetation, and sediment accumulation, flushing the underdrain, and removing or replacing compost media.
3. **Sediment** shall be removed when the accumulation causes the infiltration capacity to drop below the design flow rate of 15 gpm per filter cartridge. *Note: Instructions are available from the manufacturer for testing infiltration capacity.*
4. The **media** should be replaced at least once a year or when infiltration capacity is unrecoverable.
5. Media shall be disposed of in accordance with applicable regulations, including the Seattle-King County Department of Public Health solid waste regulations (Title 10) and state dangerous waste regulations (WAC 173-303). In most cases, compost media may be disposed of as solid waste.

DRAFT

FIGURE 6.5.5.A *StormFilter®*, SCHEMATIC

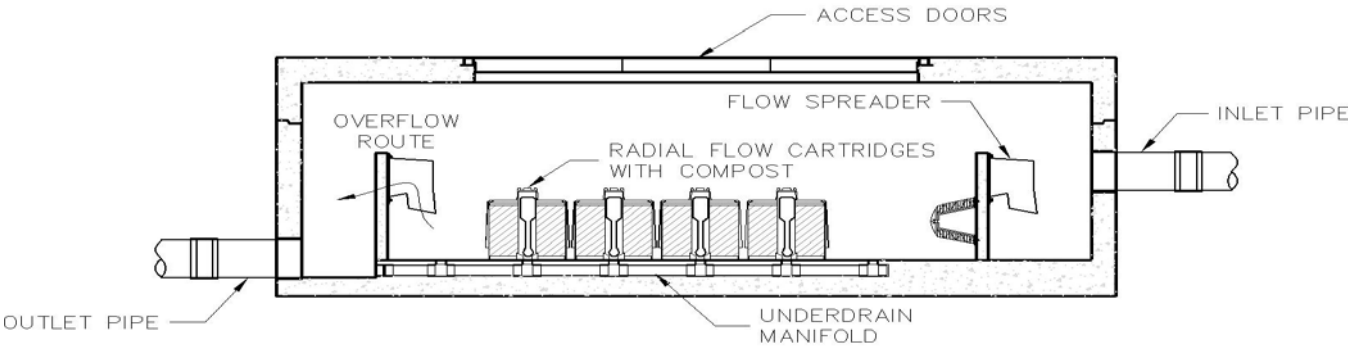

DRAFT

DRAFT

6.6 OIL CONTROL FACILITY DESIGNS

This section presents the methods, criteria, and details for oil control facilities that are not discussed in other sections. Included are the following facility designs:

- "Catch Basin Inserts," Section 6.6.1
- "Oil/Water Separators," Section 6.6.2 (p. 6-145).

Other oil control facilities include wetvaults, with minor modifications (see Section 6.4.2, p. 6-83), and linear sand filters (see Section 6.5.4, p. 6-130). Non-facility options include parking lot washing with proper disposal of wash water and compliance with a NPDES permit that already addresses oil control. More information on non-structural options can be found in the High-Use menu, Section 6.1.5 (p. 6-14).

The information presented for each facility is organized into the following two categories:

1. **Methods of Analysis:** Contains a step-by-step procedure for designing and sizing each facility.
2. **Design Criteria:** Contains the details, specifications, and material requirements for each facility.

6.6.1 CATCH BASIN INSERTS

A *catch basin insert* is a device installed underneath a catch basin inlet that treats stormwater through filtration, settling, absorption, adsorption, or a combination of these mechanisms. Catch basin inserts vary greatly in form, some being rectangular, tray-like structures, some more like oil absorbent bags or pillows. Figure 6.6.1.A (p. 6-144) presents a schematic representation of a catch basin insert.

King County, in conjunction with other local agencies, has tested several catch basin inserts and found performance and removal rates to be highly variable, depending upon system configuration, pollutant particle size and concentration, and maintenance frequency. Because performance varies widely among the different devices, King County has developed a set of **performance criteria** that the devices must satisfy to be used for oil control pursuant to Special Requirement #5. Table 6.6.1.A (p. 6-140) lists the performance criteria and describes the tests to be used to evaluate whether a device meets the criteria.

DRAFT

Water Quality Treatment Objectives

The catch basin inserts manufactured to date typically have been configured to remove sediment, pollutants adsorbed to sediment, and oil and grease. The inserts described here **are intended to capture total petroleum hydrocarbons** (TPH) for use in new or redeveloped ***high-use sites*** (see Chapter 1 for information on ***high-use sites***). Devices meeting the design criteria outlined in Table 6.6.1.A (p. 6-140) should provide oil and grease removals comparable to those of other high-use treatment options. However, catch basin inserts provide little if any spill protection and do not meet spill-containment requirements unless the catch basin in which they are installed has a tee section.

While the inserts described here are focused on treating TPH, catch basin inserts may **also be configured with other sorbents to remove specific pollutants**. Owners proposing to use catch basin inserts to treat specific pollutants should obtain assistance from King County's water quality compliance program or from another pollution control agency such as the Department of Ecology.

Catch basin inserts also **may be used for sediment control during construction**, as described in Appendix D. In some instances, particularly for ***redevelopment projects*** at ***high-use sites***, existing catch basins may first be equipped with inserts for sediment control during construction and then be reconfigured (e.g., changing treatment media) to treat TPH following completion of construction activities.

TABLE 6.6.1.A
PERFORMANCE CRITERIA AND EVALUATION METHODS FOR CATCH BASIN INSERTS

	Criteria	Methods of Evaluation
1	Insert has ability to treat the water quality design flow for a minimum of 6 weeks under typical high-traffic conditions (in the Seattle area, this flow rate is approximately 0.042 cfs (19 gpm) for a drainage area of 5,000 square feet).	Subject the system to the maximum flow rate when new, and again after 4 and 6 weeks deployment. All flow must pass through the treatment area without short-circuiting or bypass.
2	Insert has ability to create a positive seal around grate to prevent low-flow bypass.	Install and observe unit under low-flow conditions. All flow must pass through the treatment area.
3	Media system functions so that its surface does not become plugged or blinded shortly after deployment and cause stormwater to bypass media before full use of media is realized.	Inspect media after 4 and 6 weeks deployment. If filtration rate as tested in Method #1 above has been compromised and media still can absorb oil, clogging is a problem.
4	Medium resists water saturation and maintains oil-absorbing properties for a minimum of 6 weeks under constantly wet conditions.	Examine media after 4 and 6 weeks deployment for signs of water saturation or degradation. Media in acceptable condition should still absorb oil and repel water.
5	Insert has means of preventing floating oil from escaping the unit. This requirement will be waived for inserts designed to be used with a tee section or down-turned elbow.	Inspect the insert for the presence of an under-over weir at the high-flow relief. If this or some comparable device exists, it is assumed that free oils will be retained.
6	Insert has means of preventing oil-soaked media from escaping the unit.	When the insert is new, and again after 4 to 6 weeks deployment, subject it to the peak flow rate (defined under Criterion #7) and observe whether media escapes.
7	Insert has ability to pass high flows without causing excessive ponding; no ponding to occur for the 25-year peak flow rate (in Seattle this rate is approximately 43 gpm for a drainage area of 5,000 square feet).	Close off all filtration surfaces with plastic sheeting and subject the insert to the required flow. No ponding around the drain inlet should occur for the 25-year peak rate.
8	Manufacturer provides complete installation and maintenance instructions.	Verify that instructions include information on the following: • Installation • Creating an adequate seal • Removal (including safety considerations) • Cleaning and replacement • Decant and disposal of liquid wastes • Media disposal guidance
	Desirable Features	**Methods of Evaluation**
1	Insert has high-flow bypass to prevent resuspension and washout.	Subject the insert to the flow rate calculated for Criterion #1, and then gradually increase the flow. Only the designed flow rate should pass through the treatment surfaces.
2	Service contract is provided.	There is no method for evaluating service contracts. Service contracts are listed as a desirable feature because they offer greater assurance of regular system maintenance and, consequently, treatment reliability.

Note: The evaluation tests assume the use of suitable oil-absorbing/adsorbing media (see "Material Requirements," p. 6-142).

DRAFT

Applications and Limitations

Consult the water quality menus in Section 6.1 (p. 6-3) for information on how catch basin inserts may be used to meet Special Requirement #5. Note that catch basin inserts **shall not be in a public road right-of-way maintained by King County**. This is because the County does not have the resources needed to maintain catch basin inserts as frequently as needed for effective operation.

Catch basin inserts may be used to meet the oil control requirements for new or redevelopment ***high-use sites***. The minimal space requirements, planning and engineering needs, and implementation time make catch basin inserts particularly attractive for ***redevelopment projects***. The initial cost investment may be much lower than that of comparable oil treatment options. However, long-term costs associated with the **more frequent maintenance required** for catch basin inserts may offset some of the initial cost savings. Applicants considering catch basin inserts are encouraged to investigate maintenance costs associated with a particular device. Costs for maintaining catch basin inserts are on the order of $10 to $100 per unit per month, assuming monthly media replacement. The use of a catch basin insert is limited by drainage area, available space inside the catch basin, availability of maintenance personnel or services, and access.

Catch Basin Interior Space

Pipe stub-outs, misaligned inlet frames, and shallow drainage systems limit the use of catch basin inserts for redevelopment. Therefore, an applicant considering catch basin inserts for a ***redevelopment project*** must ensure that the devices are physically compatible with existing catch basins and will achieve the desired performance.

Availability of Maintenance Staff or Services

To be effective, a catch basin insert must be maintained at a frequency recommended by the manufacturer, but at least monthly (the cycle may be extended up to six weeks depending upon local conditions; see "Maintenance Requirements" on p. 6-143). Because of the importance of regular maintenance, **owners using catch basin inserts will be required to keep a maintenance log** that specifies when the facilities were cleaned or replaced; the log must be available for review by County inspectors. Commercial maintenance services for facilities like catch basin inserts are increasingly available. Applicants intending to use catch basin inserts should include maintenance in a routine program such as grounds maintenance or contract with a commercial service.

Applicants planning to use a catch basin insert should also **consider the weight of candidate devices** and whether the insert must be completely lifted out of the catch basin to be maintained. Some of the inserts currently produced are heavy and may require two people or machinery, such as a forklift, to perform routine maintenance.

DRAFT

6.6.1.1 METHODS OF ANALYSIS

Catch basin inserts require little design or analysis but must meet the design criteria listed in the following section.

6.6.1.2 DESIGN CRITERIA

Figure 6.6.1.A (p. 6-144) illustrates the general configuration of a catch basin insert. Catch basin inserts must meet the criteria outlined below.

General

1. Catch basin inserts shall not be used to satisfy Special Requirement #5 if they will be installed in a **public road right-of-way** and maintained by King County; another option from the High-Use menu must be used instead.
2. The **total maximum tributary area** for catch basin inserts shall not exceed 5,000 square feet per unit for new development projects. This limit is based on a target of treating 90 percent of the runoff

volume. For a 5,000 square foot impervious area in the Seattle region, this flow is approximately 19 gallons per minute (gpm), or 0.04 cubic feet per second for the WQ design flow.[37] The total maximum tributary area shall not exceed 7,000 square feet per unit for ***redevelopment projects***.

3. If a manufacturer develops a catch basin insert that is proven to effectively treat flow rates higher than 20 gpm (0.045 cubic feet per second) without releasing previously trapped material (in accordance with Performance Criteria #1, #5, and #6 listed in Table 6.6.1.A, p. 6-140), King County may allow specific catch basin inserts to drain areas larger than 5,000 square feet.
4. A catch basin insert for a new development project shall be **designed to fit with a standard grate**, as specified in the *King County Road Standards* (see *KCRS* Nos. 41 and 42). If the insert is installed in an existing catch basin, **the insert shall be demonstrated to fit properly** so that there is a positive seal around the grate to prevent low-flow bypass. The maximum height of the grate above the top of the frame, with the insert installed, shall not exceed $^{3}/_{16}$ inch, and the grate should be non-rocking.
5. Catch basin inserts shall be accessible as needed for maintenance and should not be limited by continuous vehicle parking.

Pretreatment

While no pretreatment is required with a catch basin insert, the use of the source control BMPs described in the *King County Stormwater Pollution Prevention Manual* (available from DNRP) will decrease maintenance needs**.** *Catch basin inserts shall not be used in place of source control best management practices.*

Material Requirements

DRAFT

1. A catch basin insert must be fitted with **oil-absorbent/adsorbent filter media**, to be changed at least monthly (October to June) and whenever the filter media surface is covered with sediment. **Acceptable sorbent media** include wood fiber products such as A*bsorbent W* or S*uperSorb*, whole fibrous moss (need not be sphagnum), or *Petrolok*; these media have been investigated by the County and found to retain captured oil fairly effectively. *Streamguard*™ polymer (currently distributed by Foss Environmental) was also tested using the same method established by the County and found to achieve acceptable oil retention. Other products which absorb oil without significant release are also acceptable.[38] Other polypropylene-based products are expected to be acceptable, although none but the Streamguard™ polymer have been investigated to date.
2. **Unacceptable filter media**. Cedar Grove compost was tested and found unacceptable for oil retention. Compost from Stormwater Management, Inc., who produce a patented CFS®, was also tested. Although it performed fairly well, it did not retain oil as well as the other products tested. Therefore, CFS® leaf compost shall not be used in catch basin inserts for oil control. Other materials that are unsuitable for use in catch basin inserts include Fuller's or diatomaceous earth and kitty litter.
3. To minimize the generation of solid waste and the consumption of natural resources, systems constructed of or using **recycled products are preferred**. Reusable filter materials shall be refreshed according to the manufacturer's instructions.

Construction Requirements

1. Installation of a catch basin insert for a new development or ***redevelopment project*** shall follow the manufacturer's recommended procedures. The insert should be installed in the catch basin after the

[37] Testing by King County indicates that few of the devices tested could continue to meet treatment requirements at flow rates in excess of about 20 gpm. In addition, due to the very short contact time and potential for flushing previously trapped materials, treatment would be compromised at higher flow rates.

[38] Criteria used for acceptable absorbent materials are that a completely oil-saturated sample of the material does not release more than 10 mg/L of total petroleum hydrocarbon in any two minute period when flushed with tap water (running at a rate of 0.3 to 0.5 gpm) for 10 consecutive minutes.

site has been paved or stabilized (for new development) or after completion of construction (for a redevelopment site that is already paved).

2. If a catch basin insert is **used for sediment control during construction**, it shall be reconfigured in accordance with the manufacturer's recommendations. When used for sediment control, the insert should be inspected at least weekly and maintained if needed (see Appendix D for information on using the insert for sediment control).

Maintenance Requirements

Catch basin insert systems require more frequent maintenance than other oil treatment systems. While maintenance requirements of individual units may be relatively minor, the need for diligence and the potentially large number of units required in place of other more typical oil treatment systems make sound maintenance planning essential to the successful use of these devices. Therefore, the following provisions are necessary for proper maintenance:

1. A **drainage facility declaration of covenant and grant of easement** per Reference Section 8-J (or equivalent) must be recorded allowing King County to inspect facilities.

2. Maintenance needs vary from site to site based on the type of land use activity, implementation of source controls, and weather conditions. Catch basin inserts should be **maintained at a frequency recommended by the manufacturer**, but at least monthly during the wet season (October through April) and once every 2 months during the remainder of the year. *Note: During the first wet season, it is recommended that inspection be carried out every other week to determine whether a shorter maintenance cycle is needed for the particular site.*

3. Maintenance shall include full replacement or renewal of oil absorbent/adsorbent material. In addition, when maintaining the insert, the catch basin sump should be inspected for sediment accumulation. Sediment should be removed if the depth of sediment in the sump is greater than 0.5 feet. **An inspection and maintenance log shall be kept onsite** and made available to County inspectors on an as-needed basis. At a minimum, the maintenance log shall include the following information: date, type of maintenance performed, names of persons performing the work, and signature. Persons conducting maintenance activities should wear rubber gloves for health and safety protection while handling used filter media.

4. The **operation and maintenance instructions** from the catch basin insert manufacturer shall be kept with the maintenance log. Manufacturer's instructions should include installation, removal (including safety instructions), cleaning and replacement (including a practical means of determining when the unit is in need of service), and media disposal guidance (including decanting of liquid wastes).

5. Owners should follow the manufacturer's instructions for **dewatering filter media**, which vary depending on the type of unit. Generally, catch basin inserts that drain by gravity can be dewatered in place during dry weather. If an owner is unable to perform monthly maintenance because there has not been sufficient dry weather, the maintenance period may be extended up to an additional two weeks. If by the end of the additional two weeks there has been insufficient dry weather to allow dewatering, the owner shall make other arrangements for dewatering the filter media. Such arrangements could include use of a commercial service, dewatering the insert in a watertight container, or other methods meeting environmental regulations. Media shall be disposed of in accordance with applicable regulations, including the Seattle-King County Department of Public Health solid waste regulations (Title 10) and State dangerous waste regulations (WAC 173-303). In most cases, dewatered filter media may be disposed of as solid waste.

DRAFT

FIGURE 6.6.1.A SCHEMATIC OF CATCH BASIN INSERT

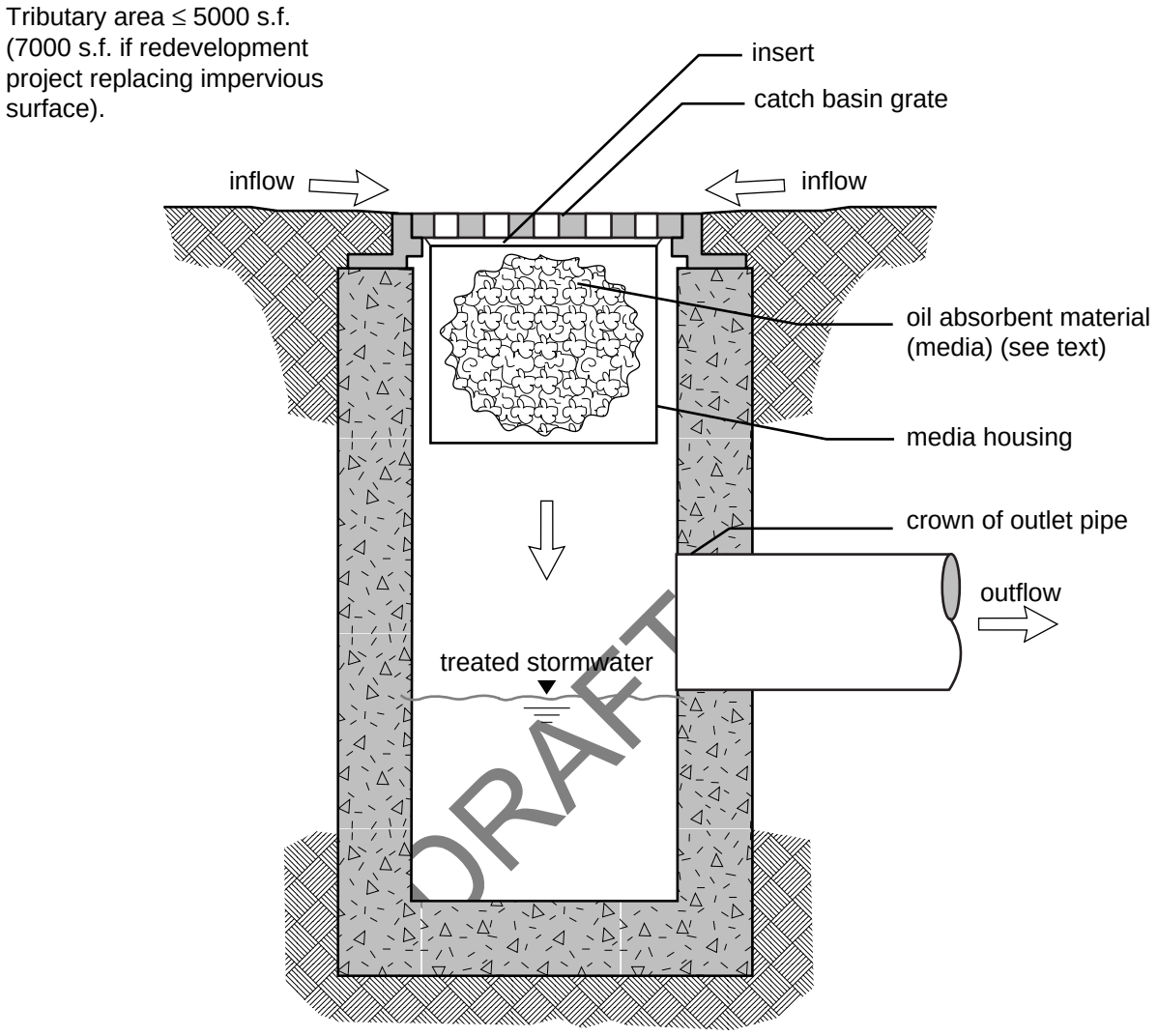

SECTION VIEW
NTS

6.6.2 OIL/WATER SEPARATORS

Oil/water separators rely on passive mechanisms that take advantage of oil being lighter than water. Oil rises to the surface and can be periodically removed. The two types of oil/water separators typically used for stormwater treatment are the baffle type or API (American Petroleum Institute) oil/water separator and the coalescing plate oil/water separator.

Baffle oil/water separators use vaults that have multiple cells separated by baffles extending down from the top of the vault (see Figure 6.6.2.D on page 6-155 for schematic details). The baffles block oil flow out of the vault. Baffles are also commonly installed at the bottom of the vault to trap solids and sludge that accumulate over time. In many situations, simple floating or more sophisticated mechanical oil skimmers are installed to remove the oil once it has separated from the water.

Coalescing plate separators are typically manufactured units consisting of a baffled vault containing several inclined corrugated plates stacked and bundled together (see Figure 6.6.2.E on page 6-156 for schematic details). The plates are equally spaced (typical plate spacing ranges from $^1/_4$-inch to 1 inch) and are made of a variety of materials, the most common being fiberglass and polypropylene. Efficient separation results because the plates reduce the vertical distance oil droplets must rise in order to separate from the stormwater. Once they reach the plate, oil droplets form a film on the plate surface. The film builds up over time until it becomes thick enough to migrate upward under the influence of gravity along the inclined plate. When the film reaches the edge of the plate, oil is released as large droplets which rise rapidly to the surface, where the oil accumulates until the unit is maintained. Because the plate pack increases treatment effectiveness significantly, coalescing plate separators can achieve a specified treatment level with a smaller vault size than a simple baffle separator.

Oil/water separators are meant to treat stormwater runoff from more intensive land uses, such as high-use sites, and facilities that produce relatively high concentrations of oil and grease. Although baffle separators historically have been used to remove larger oil droplets (150 microns or larger), they may also be sized to remove smaller oil droplets. Both separators may be used to meet a **performance goal of 10 to 15 mg/L** by designing the unit to removal oil particles 60 microns and larger.

DRAFT

Applications and Limitations

Oil/water separators are designed to remove free oil and are not generally effective in separating oil that has become either chemically or mechanically emulsified and dissolved in water. Therefore, it **is desirable for separators be installed upstream of facilities and conveyance structures that introduce turbulence and consequently promote emulsification**. Emulsification of oil can also result if surfactants or detergents are used to wash parking areas that drain to the separator. Detergents shall not be used to clean parking areas unless the wash water is collected and disposed of properly (usually to the sanitary sewer).

Oil/water separators are **best located in areas where the tributary drainage area is nearly all impervious, and a fairly high load of petroleum hydrocarbons is likely to be generated**. Oil/water separators are not recommended for areas with very dilute concentrations of petroleum hydrocarbons since their performance is not effective at low concentrations. Excluding unpaved areas helps to minimize the amount of sediment entering the vault, reducing the need for maintenance. A unit that fails and ceases to function can release previously trapped oil to the downstream receiving water, both in release from the oily sediments and from entrainment of surface oils.

Wetvaults may also be modified to function as baffle oil/water separators (see design criteria for wetvaults, Section 6.4.2.2, p. 6-83).

Consult the water quality menus in Section 6.1 (p. 6-3) for information on how baffle and coalescing plate oil/water separators may be used to meet Special Requirement # 5.

6.6.2.1 METHODS OF ANALYSIS

Background

Generally speaking, in most oil and water mixtures the degree of oil/water separation that occurs is dependent on both the time the water is detained in the separator and the oil droplet size. The sizing methods in this section are based on Stokes' law:

$$V_T = \frac{g\left(d_p - d_c\right)D_o^2}{18\mu} \tag{6-21}$$

where V_T = rise velocity of oil droplet
g = gravitational constant
d_p = density of droplet to be removed
d_c = density of carrier fluid
D_o = diameter of oil droplet
μ = absolute viscosity of carrier fluid

1. The basic assumptions inherent in Stokes' law are: (1) flow is laminar, and (2) the oil droplets are spherical.

Traditional baffle separators are designed to provide sufficient hydraulic residence time to permit oil droplets to rise to the surface. The residence time T_r is mathematically expressed as follows:

$$T_r = \frac{V}{Q} \tag{6-22}$$

where V = effective volume of the unit or container, or A_s x H, where
A_s = surface area of the separator unit, and
H = height of water column in the unit

Q = hydraulic capacity or flow through the separator

The time required for the oil droplet to rise to the surface within the unit is found by the relation:

$$T_T = \frac{H}{V_T} \tag{6-23}$$

where V_T = rise velocity of the oil droplet

The oil droplet rises to the water surface if the residence time in the separator is at least equal to the oil droplet rise time. This can be expressed as follows:

$$T_r = T_T$$

By substituting terms and simplifying:

DRAFT

$$V_T = \frac{Q}{A_s} \tag{6-24}$$

where A_s = surface area of the separator unit

The ratio in Equation (6-24) is designated as the surface overflow rate or loading rate. It is this rate that governs the removal efficiency of the process and predicts whether an oil droplet will be removed by the separator.

Method for Baffle Separators

Design steps for the baffle separator are summarized below:

Step 1: Determine the WQ design flow (*Q*). The facility is sized based on the WQ design flow (see Section 6.2.1, p. 6-17). The separator **must be designed as an off-line facility**. That is, flows higher than the WQ design flow must bypass the separator.

Step 2: Calculate the minimum vertical cross-sectional area. Use the following equation:

$$A_c = \frac{Q}{V_H} \tag{6-25}$$

where A_c = minimum cross-sectional area (sf)
Q = water quality design flow (cfs)
V_H = design horizontal velocity (fps)

Set the horizontal velocity V_H equal to 15 times the oil droplet's rise rate V_T. A **design rise rate of 0.033 feet per minute shall be used** unless it is demonstrated that conditions of the influent or performance function warrant the use of an alternative value. Using the 0.033 feet per minute rise rate results in V_H = 0.008 fps (= 0.495 fpm).

DRAFT

Step 3: Calculate the width and depth of the vault. Use the following equation:

$$D = \frac{A_c}{W} \tag{6-26}$$

where D = maximum depth (ft)
W = width of vault (ft)
and where A_c is from Step 2 above.

The computed depth D must meet a depth-to-width ratio r of between 0.3 and 0.5 (i.e., $0.3 \le D/W \le 0.5$).
Note: $D = (r\,A_c)^{0.5}$ and
$W = D/r$ and
r = the depth-to-width ratio

Step 4: Calculate the length of the vault. Use the following equation:

$$L = FD\left(\frac{V_H}{V_T}\right) \tag{6-27}$$

where L = length of vault (ft)
F = turbulence and short-circuiting factor (unitless, see Figure 6.6.2.A)
V_H = horizontal velocity (ft/min)
V_T = oil droplet rise rate (ft/min)
D = depth (ft)

The turbulence factor F shall be selected using a V_H/V_T ratio of 15, so $F = 1.64$.

Therefore Equation (6-27) becomes: $L = 1.65 \times 15 \times D$

FIGURE 6.6.2.A TURBULENCE FACTOR PLOT

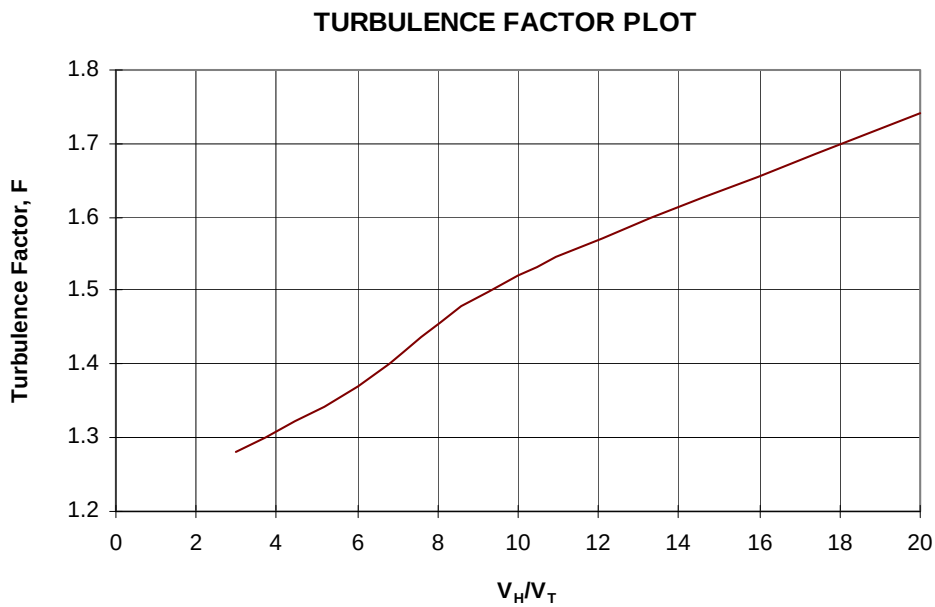

Step 5: Check the separator's length-to-width ratio. The length L of the vault must be at least 5 times its width in order to minimize effects from inlet and outlet disturbances. The length of the forebay shall be approximately $L/3$.

Step 6: Compute and check that the minimum horizontal surface area (A_H) criterion is satisfied. This criterion is expressed by the following equation:

$$A_H = \left(\frac{1.65Q}{0.00055}\right) \leq LW \qquad (6\text{-}28)$$

Step 7: Compute and check that the horizontal surface area of the vault forebay. This area must be greater than 20 square feet per 10,000 square feet of tributary impervious area. The length of the forebay ($L/3$) may be increased to meet this criterion without having to increase the overall length of the vault.

Step 8: Design the flow splitter and high-flow bypass. See Section 6.2.5 (p. 6-29) for information on flow splitter design.

Method for Coalescing Plate Separators

Coalescing plate separators are designed using the same basic principles as baffle separators. The major difference is that in the baffle separator, horizontal separation is related only to water surface area, while in the coalescing plate separator, horizontal separation is related to the sum of the plan-areas of the plates. The treatment area is increased by the sum of the horizontal projections of the plates being added, and is referred to as the plate *effective separation area*.

The basic procedure for designing a coalescing plate separator is to determine the effective separation area required for a given design flow. The specific vault sizing then depends on the manufacturer's plate design. The specific design, analysis, configuration, and specifications for coalescing plates are empirically based and variable. Manufacturers' recommendations may be used to vary the recommendations given below.

Step 1: Determine the WQ design flow. The coalescing plate oil/water separator must be sized based on the WQ design flow (see Section 6.2.1, p. 6-17). The separator **must be designed as an off-line facility**; flows higher than the WQ design flow must bypass the separator.

Step 2: Calculate the plate minimum effective separation area (A_h). A_h is found using the following equation:

$$A_h = \frac{60Q}{0.00386\left(\dfrac{S_w - S_o}{\mu}\right)} \qquad (6\text{-}29)$$

where S_w = specific gravity of water = 1.0
S_o = specific gravity of oil = 0.85
μ = absolute viscosity of water (poises); use 0.015674 for temp = 39° F
Q = water quality design flow rate (cfs)
A_h = required effective (horizontal) surface area of plate media (sf).

DRAFT

Equation (6-29) is based on an oil droplet diameter of 60 microns. A graphical relation of Equation (6-29) is shown in Figure 6.6.2.B below. This graph may be used to determine the required effective separation surface area of the plate media.

FIGURE 6.6.2.B EFFECTIVE SEPARATION SURFACE VS FLOW RATE

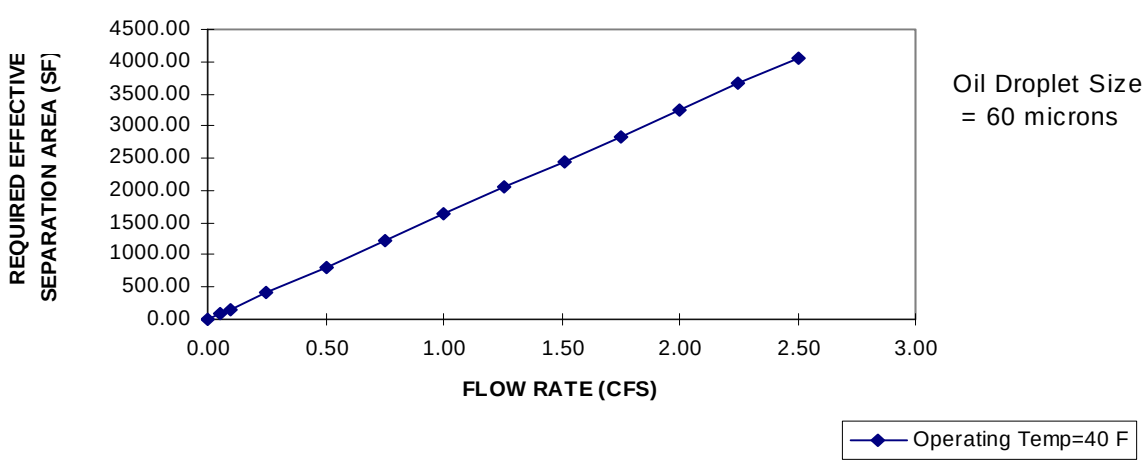

Step 3: Calculate the collective projected surface area (A_p). A key design step needed to assure adequate performance of the separator unit is to convert the physical plate area (the surface area of the plates if laid flat) into the effective (horizontal) separation surface area A_h (calculated in step 2). The effective separation surface area A_h is based on the collective projected horizontal surface area A_p of the plates where the plates are inclined, rather than their laid flat.

$$A_h = A_p = A_a (\cos H) \qquad (6\text{-}30)$$

where A_a = actual collective plate area of the plate configuration (sf)
H = angle of the plates to the horizontal (degree)

This equation is represented graphically in Figure 6.6.2.C below. The designer shall make sure that the manufacturer sizes the oil/water separator using the projected surface area rather than the actual plate area. *Note: For this method, only the* ***lower plate surface*** *may be counted as effective separation surface, regardless of manufacturer's claims.*

FIGURE 6.6.2.C PROJECTED HORIZONTAL PLATE AREA FOR COALESCING PLATE OIL/WATER SEPARATOR

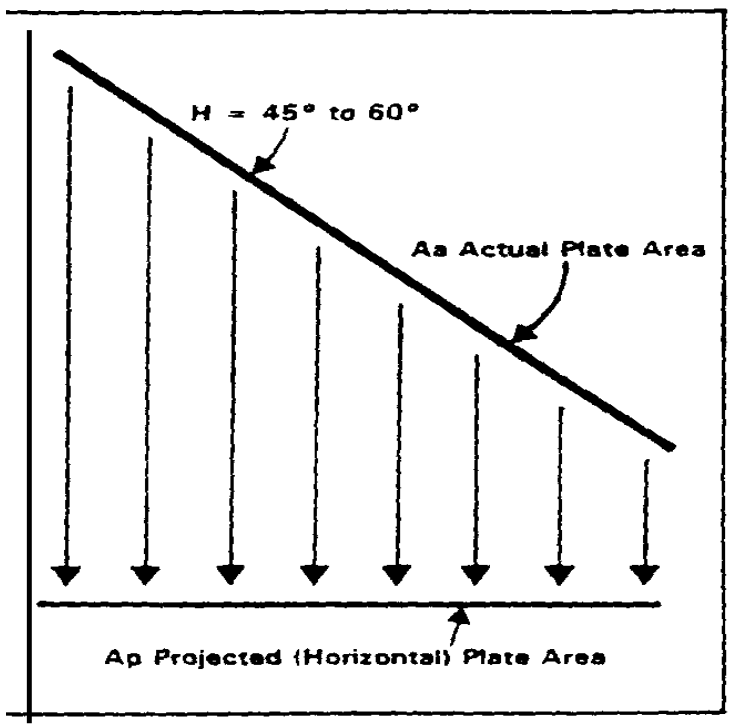

Step 4: Check with specific separator manufacturers. Check with specific manufacturers to choose a separator that provides the required actual collective plate area calculated in Step 3, and meets the other design criteria given in the next section, p. 6-151. The specific vault design will depend upon each manufacturer's design. The geometric configuration and dimensions of the plate pack as well as the vault design are variable and flexible depending on each manufacturer's product.

Table 6.6.2.A (p. 6-151) provides approximate vault sizes for rough planning purposes. In reality, various manufacturers have quite different designs, both for the plate packs themselves as well as for forebay and afterbays. In addition, standard pre-cast vault dimensions vary with each manufacturer. These various factors can greatly affect the volume of vault needed to provide a given effective separation area. The numbers in Table 6.6.2.A should, then, be considered "order of magnitude" estimates only.

TABLE 6.6.2.A APPROXIMATE COALESCING PLATE OIL/WATER SEPARATOR VAULT DIMENSIONS*	
Area of Effective Separation (square feet)	**Approximate vault volume required (cubic feet) for plates with $^1/_2$ inch spacing and inclined 60 degrees from horizontal (cubic feet)**
100	150
200	240
300	330
600	530
1,200	890
2,400	1150
3,200	2090
4,800	2640
** Order of magnitude estimates for planning purposes only. Actual vault volumes vary considerably depending on separator design features and pre-cast vault dimensions.*	

DRAFT

6.6.2.2 DESIGN CRITERIA

Details for a typical baffle oil/water separator are shown in Figure 6.6.2.D (p. 6-155). **Other designs** and configurations of separator units and vaults are allowed, including above ground units. However, they must produce equivalent treatment results and treat equivalent flows as conventional units.

General Siting

1. Oil/water separators **must be installed off-line**, bypassing flows greater than the WQ design flow.
2. When a separator is required, it **shall precede other water quality treatment facilities** (except wetvaults). It may be positioned either upstream or downstream from flow control facilities, since there are both advantages and disadvantages with either placement.
3. In moderately pervious soils where **seasonal groundwater** may induce flotation, buoyancy tendencies shall be balanced by ballasting or other methods as appropriate.
4. Any **pumping devices** shall be installed downstream of the separator to prevent oil emulsification in stormwater.

Vault Structure — General

The following criteria apply to both baffle and coalescing plate separators:

1. Separator vaults shall be **watertight**. Where pipes enter and leave a vault below the WQ design water surface, they shall be sealed using a non-porous, non-shrinking grout.
2. Separator vaults shall have a **shutoff mechanism** on the outlet pipe to prevent oil discharges during maintenance and to provide emergency shut-off capability in case of a spill. A valve box and riser shall also be provided according to the design criteria for wetponds (see "Inlet and Outlet Criteria," Section 6.4.1.2, p. 6-73).

Vault Structure — Baffle Separators

In addition to the above general criteria, the following criteria apply specifically to baffle separators:

1. Baffle separators shall be divided into **three compartments**: a forebay, an oil separation cell, and an afterbay. The **forebay** is primarily to trap and collect sediments, encourage plug flow, and reduce turbulence. The **oil separation cell** traps and holds oil as it rises from the water column, and it serves as a secondary sediment collection area. The **afterbay** provides a relatively oil-free cell before the outlet, and it provides a secondary oil separation area and holds oil entrained by high flows.
2. The **length of the forebay** shall be approximately $^1/_3$ to $^1/_2$ of the length of the vault, *L*. In addition, the **surface area of the forebay** must be at least 20 square feet per 10,000 square feet of tributary impervious area draining to the separator.
3. A **removable flow-spreading baffle**, extending from the surface to a depth of up to $^1/_2$ the vault depth (*D*) is recommended to spread flows.
4. The **removable bottom baffle** (sediment-retaining baffle) shall be a minimum of 24 inches (see Figure 6.6.2.D, p. 6-155), and located at least 1 foot from the oil-retaining baffle. A "window wall" baffle may be used, but the area of the window opening must be at least three times greater than the area of the inflow pipe.
5. A **removable oil retaining baffle** shall be provided and located approximately $^1/_4$ *L* from the outlet wall or a minimum of 8 feet, whichever is greater (the 8-foot minimum is for maintenance purposes). The oil-retaining baffle shall extend from the elevation of the water surface to a depth of at least 50% of the design water depth. Various configurations are possible, but the baffle shall be designed to minimize turbulence and entrainment of sediment.
6. Baffles may be fixed rather than removable if additional entry ports and ladders are provided so that both sides of the baffle are accessible by maintenance crews.
7. Baffle separator vaults shall have a minimum **length-to-width ratio** of 5.
8. The **design water depth** (*D*) shall be no deeper than 8 feet unless approved by DDES. Depths greater than 8 feet may be permitted on a case-by-case basis, taking into consideration the potential for depletion of oxygen in the water during the warm summer months.
9. Baffle separator vaults shall have a **design water depth-to-width** ratio of between 0.3 and 0.5.

DRAFT

Vault Structure — Coalescing Plate Separators

In addition to the above general criteria, the following criteria apply specifically to coalescing plate separators:

1. Coalescing plate separators shall be divided by baffles or berms into **three compartments**: a forebay, an oil separation cell which houses the plate pack, and an afterbay. The **forebay** controls turbulence and traps and collects debris. The **oil separation cell** captures and holds oil. The **afterbay** provides a relatively oil-free exit cell before the outlet.
2. The **length of the forebay** shall be a minimum of $^1/_3$ the length of the vault, *L* (but $^1/_2$ *L* is recommended). In addition, it is recommended that the **surface area of the forebay** be at least 20 square feet per 10,000 square feet of tributary impervious area draining to the separator. In lieu of an attached forebay, a separate grit chamber, sized to provide be at least 20 square feet per 10,000 square feet of tributary impervious area, may precede the oil/water separator.
3. An **oil-retaining baffle** shall be provided. If maintained by the County, the baffle must be a minimum of 8 feet from the outlet wall (for maintenance purposes). For large units, a baffle position of 0.25*L* from the outlet wall is recommended. The oil-retaining baffle shall extend from the water surface to a depth of at least 50% of the design water depth. Various configurations are possible, but the baffle shall be designed to minimize turbulence and entrainment of sediment.
4. A bottom **sediment-retaining baffle** shall be provided upstream of the plate pack. The minimum height of the sludge-retaining baffle shall be 18 inches. Window walls may be used, but the window opening must be a minimum of three times greater than the area of the inflow pipe.

5. It is recommended that entire space between the sides of the plate pack and the vault wall be filled with a solid but light-weight removable material such as a **plastic or polyethylene foam** to reduce short-circuiting around the plate pack. Rubber flaps are not effective for this purpose.
6. If a separator will be maintained by King County, the **separator plates** shall meet the following requirements:
   a) Plates shall be inclined at 45° to 60° from the horizontal. This range of angles exceeds the angle of repose of many solids and therefore provides more effective droplet separation while minimizing the accumulation of solids on the individual plates.
   b) Plates shall have a minimum plate spacing of $^{1}/_{2}$-inch and have corrugations.
   c) Plates shall be securely bundled in a plate pack so that they can be removed as a unit.
   d) The plate pack shall be a minimum of 6 inches from the vault bottom.
   e) There should be 1 foot of head space between the top of the plate pack and the bottom of the vault cover.

Inlet and Outlet

1. The **inlet shall be submerged**. A tee section may be used to submerge the incoming flow and must be at least 2 feet from the bottom of the tank and extend above the WQ design water surface.

   Intent: The submerged inlet is to dissipate energy of the incoming flow. The distance from the bottom is to minimize resuspension of settled sediments. Extending the tee to the surface allows air to escape the flow, thus reducing turbulence. Alternative inlet designs that accomplish these objectives are acceptable.
2. The **vault outlet pipe** shall be sized to pass the WQ design flow before overflow (using the pipe sizing methods in Chapter 4). The vault outlet pipe shall be back-sloped or have a tee extending 1 foot above and below the WQ design water surface to provide for secondary trapping of oils and floatables in the wetvault. *Note: The invert of the outlet pipe sets the* ***WQ design water surface*** *elevation.*

DRAFT

Material Requirements

1. All **metal parts shall be corrosion-resistant**. Zinc and galvanized materials are to be avoided when substitutes are available because of aquatic toxicity potential. Painting metal parts for corrosion resistance is not allowed due to lack of longevity.
2. **Vault baffles** shall be concrete, stainless steel, fiberglass reinforced plastic, or other acceptable material and shall be securely fastened to the vault.
3. **Gate valves**, if used, shall be designed for seating and unseating heads appropriate for the design conditions.
4. For coalescing plate separators, **plate packs** shall be made of fiberglass, stainless steel or polypropylene.

Access Requirements

Same as for **detention vaults** (see Section 5.3.3) except for the following **modifications:**

1. Access to **each compartment** is required. If the length or width of any compartment exceeds 50 feet, an additional access point for each 50 feet is required.
2. Access points for the **forebay and afterbay** shall be positioned partially over the inlet or outlet tee to allow visual inspection as well as physical access to the bottom of the vault.
3. For **coalescing plate separators**, the following also apply:

a) Access to the **compartment containing the plate pack** shall be a removable panel or other access able to be opened wide enough to remove the entire coalescing plate bundle from the cell for cleaning or replacement. Doors or panels shall have stainless steel lifting eyes, and panels shall weigh no more than 5 tons per panel.

b) A **parking area or access pad** (25-foot by 15-foot minimum) shall be provided near the coalescing plate bundles to allow for their removal from the vault by a truck-mounted crane or backhoe, and to allow for extracting accumulated solids and oils from the vault using a vactor truck.

Access Roads, Right of Way, and Setbacks

Same as for detention vaults (see Section 5.3.3).

Recommended Design Features

1. A **gravity drain** for maintenance is recommended if grade allows. The drain invert should be at a depth equal to the depth of the oil retaining baffle. Deeper drains are encouraged where feasible.
2. The recommended design features for wetvaults should be applied.
3. If large amounts of oil are likely to be captured, a bleed-off pipe and separate waste oil tank may be located adjacent to the vault to channel separated oils into the tank. This improves the overall effectiveness of the facility, especially if maintenance is only annually. It also improves the quality of the waste oil recovered from the facility.

Construction Considerations

1. Construction of oil/water separators shall follow and conform to the manufacturer's recommended construction procedures and installation instructions as well as Chapter 7 of the *King County Road Standards*. Where the possibility of vault flotation exists, the vault shall be properly anchored in accordance with the manufacturer's recommendations or an engineer's design and recommendations.
2. Particular care must be taken when inserting coalescing plate packs in the vault so as not to damage or deform the plates.
3. Upon completion of installation, the oil/water separator shall be thoroughly cleaned and flushed prior to operating.

DRAFT

Maintenance Considerations

1. Oil/water separators must be cleaned regularly to ensure that accumulated oil does not escape from the separator. Separators should be cleaned by November 15 of each year to remove accumulation during the dry season. They must also be cleaned after spills of polluting substances such as oil, chemicals, or grease. Vaults must also be cleaned when inspection reveals any of the following conditions:

   a) Oil accumulation in the oil separation compartment equals or exceeds 1 inch, unless otherwise rated for greater oil accumulation depths recommended by the specific separator manufacturer.

   b) Sediment deposits in the bottom of the vaults equals or exceeds 6 inches in depth.

2. For the first several years, oil/water separators should be checked on a quarterly basis for proper functioning and to ensure that accumulations of oil, grease, and solids in the separator are at acceptable levels. Effluent from the vault shall also be observed for an oil sheen to ensure that oil concentrations are at acceptable levels and that expected treatment is occurring. Separators should also be inspected after large storm events (about 2 inches in 24 hours).
3. Access to separators shall be maintained free of all obstructions, and units shall be readily accessible at all times for inspection and maintenance.

4. Maintenance personnel entering oil/water separator vaults should follow the state regulations pertaining to confined space entry, if applicable.

FIGURE 6.6.2.D BAFFLE OIL/WATER SEPARATOR

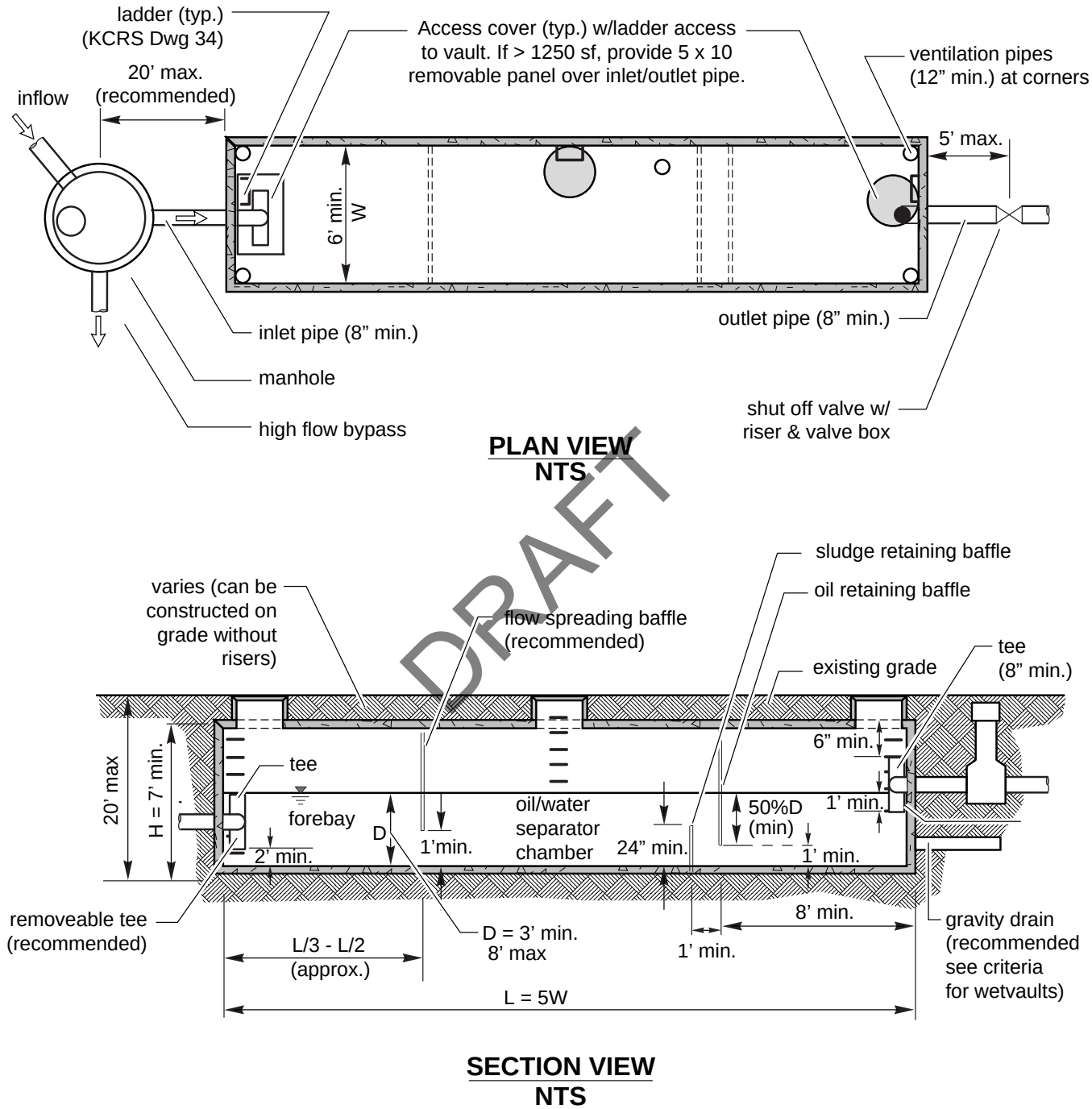

FIGURE 6.6.2.E COALESCING PLATE OIL/WATER SEPARATOR

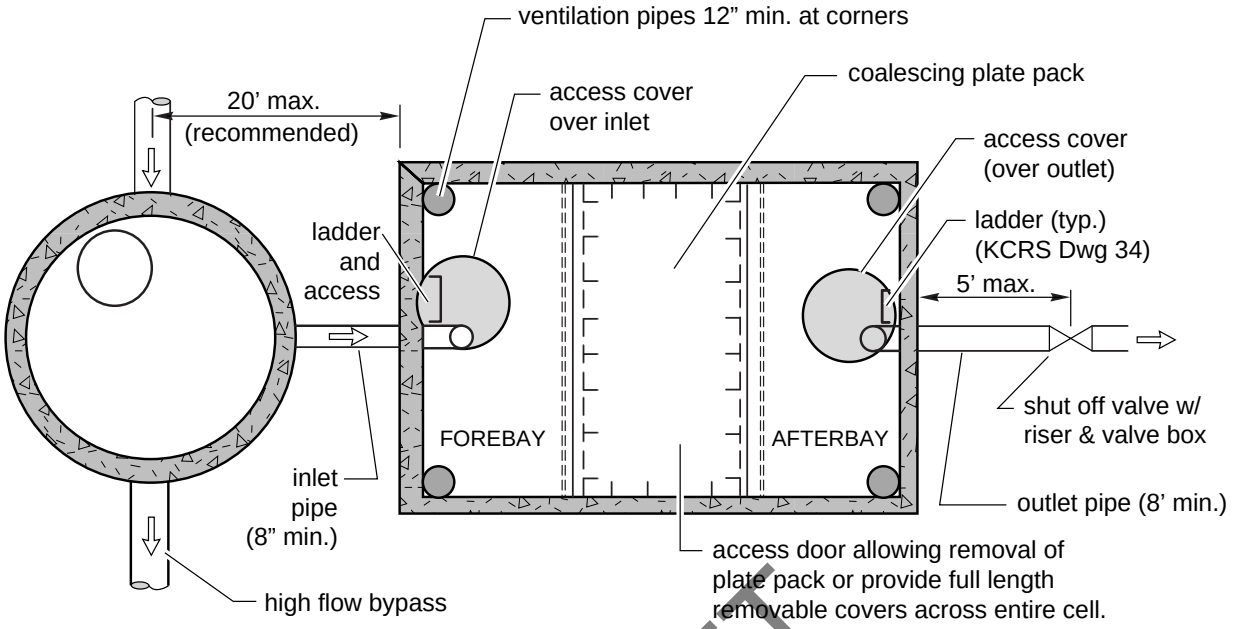

PLAN VIEW
NTS

DRAFT

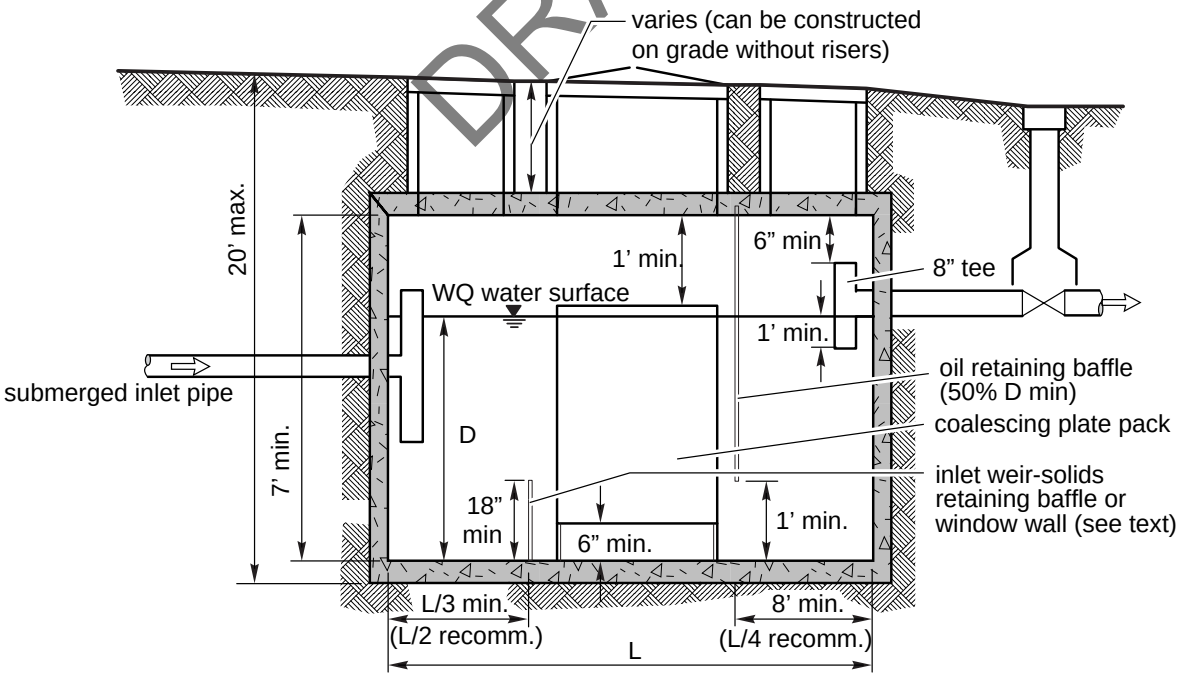

SECTION VIEW
NTS

DEFINITIONS

Note: The following terms are provided for reference and use with this manual. They shall be superseded by any other definitions for these terms adopted by ordinance.

Acceptable discharge point means an enclosed drainage system (i.e., pipe system, culvert, or tightline) or open drainage feature (e.g., ditch, channel, swale, stream, river, pond, lake, or wetland) where concentrated runoff can be discharged without creating a significant adverse impact.

Adjustment means a department-approved variation in the application of the requirements of K.C.C. 9.05.050 and the *Surface Water Design Manual* to a particular project in accordance with K.C.C. 9.05.050C.

Agricultural project means any project located on, and proposing improvements consistent with, the permitted uses of land zoned for Agriculture (A zoned lands) as defined in KCC 21A.08.

Alkalinity means a measure of the acid neutralizing capacity of water; the ability of a solution to resist changes in pH by neutralizing acidic input.

Alluvial soil means a soil found in valley bottoms that is generally fine-grained and often has a high seasonal water table.

Anadromous fish means fish that ascend rivers from the sea for breeding.

Applicant means a property owner or a public agency or public or private utility that owns a right-of-way or other easement or has been adjudicated the right to such an easement under RCW 8.12.090, or any person or entity designated or named in writing by the property or easement owner to be the applicant, in an application for a development proposal, permit, or approval.

Appurtenances means machinery, appliances, or auxiliary structures attached to a main structure, but not considered an integral part thereof, for the purpose of enabling it to function.

Aquatic area means any non-wetland water feature including all shorelines of the state, rivers, streams, marine waters, inland bodies of open water including lakes and ponds, reservoirs and conveyance systems and impoundments of these features if any portion of the feature is formed from a stream or wetland and if any stream or wetland contributing flows is not created solely as a consequence of stormwater pond construction. Aquatic area does not include water features that are entirely artificially collected or conveyed storm or wastewater systems or entirely artificial channels, ponds, pools or other similar constructed water features.

Aquifer means a geologic stratum containing groundwater that can be withdrawn and used for human purposes.

Area-specific flow control facility requirement means the requirement of an onsite flow control facility or facilities designed in accordance with the performance criteria, target surfaces, and exceptions specified for the mapped flow control area in which a proposed project is located.

Area-specific water quality facility requirement means the requirement of an onsite water quality facility or facilities designed in accordance with the treatment menu, target surfaces, and exceptions specified for the mapped water quality treatment area in which a proposed project is located.

As-built drawings means engineering plans which have been revised to reflect all changes to the plans which occurred during construction.

Back-up system means a retention/detention facility where inflows are routed through the control structure before entering the facility; they are "backed up" into the facility by the flow restrictor.

Backwater means water upstream from an obstruction that is deeper than it would normally be without the obstruction.

Baffle means a device to deflect, check or regulate flow.

DRAFT

Base flood means a flood having a one percent chance of being equaled or exceeded in any given year; also referred to as the 100-year flood. The base flood is determined for existing conditions, unless a basin plan including projected flows under future developed conditions has been completed and adopted by King County, in which case these future flow projections shall be used. In areas where the Flood Insurance Study includes detailed base flood calculations, those calculations may be used until projections of future flows are completed and approved by King County.

Base flood elevation means the water surface elevation of the base flood. It shall be referenced to the National Geodetic Vertical Datum of 1929 (NGVD).

Basin means a geographic area that contains and drains to a stream or river named and noted on common maps, such as the Cedar River, Sammamish River, Green River, Snoqualmie River, Skykomish River, or White River, or a geographic area that drains to a non-flowing water body named and noted on common maps, such as Lake Washington or Puget Sound.

Basin plan means a plan and all implementing regulations and procedures including, but not limited to, capital projects, public education activities, land use management adopted by ordinance for managing surface and storm water within the basin.

Berm means a constructed mound of earth or other material used to confine, control, spread, or filter water.

Best management practice (BMP) means a schedule of activities, prohibitions of practices, physical structures, maintenance procedures, and other management practices undertaken to reduce or prevent increases in runoff quantity and pollution.

Biofiltration swale means a long, gently sloped, vegetated ditch designed to filter pollutants from stormwater. Grass is the most common vegetation, but wetland vegetation can be used if the soil is saturated.

Blanket adjustment means an adjustment established by the County that can be applied routinely or globally to all projects where appropriate. Blanket adjustments are usually based on a previously approved adjustment and can be used to effect minor changes or corrections to the design requirements of this manual, or to add new designs and methodologies to this manual.

Blind, blinding means to severely reduce the ability of a normally infiltrative media to pass water, usually by plugging with sediment or debris.

BMP means best management practice.

Bollard means a post used to prevent vehicular access. A bollard may or may not be removable.

BSBL means building setback line.

Buffer means a designated area contiguous to a steep slope or landslide hazard area intended to protect slope stability, attenuation of surface water flows, and landslide hazards, or a designated area contiguous to and intended to protect and be an integral part of an aquatic area or wetland

Building setback line means a line measured parallel to a property, easement, drainage facility, or buffer boundary that delineates the area (defined by the distance of separation) where buildings or other obstructions are prohibited (including decks, patios, outbuildings, or overhangs beyond 18 inches). Wooden or chain link fences and landscaping are allowable within a building setback line. In this manual the minimum building setback line shall be 5 feet.

CAO means the Critical Areas Ordinance, which amends KCC 21A.24 to establish and regulate critical areas. Most types of critical areas were previously regulated as "sensitive areas" in KCC 21A.24 prior to adoption of the CAO (see "critical area").

Catch basin insert means a device installed underneath a catch basin inlet that uses gravity, filtration, or various sorbent materials to remove pollutants from stormwater. When used with sorbent material, catch basin inserts are primarily for oil removal.

Catch line means the point where a severe slope intercepts a different, gentler slope.

DRAFT

Cation exchange capacity means the quantity of ammonium cations in a dry mass saturated with ammonium acetate that can be displaced by a strong solution of NaCl, measured in milliequivalents per gram or 100 grams. The test is usually performed at neutral pH (Freeze & Cherry, *Groundwater*, 1979).

Channel means a long, narrow excavation or surface feature that conveys surface water and is open to the air.

Channel, constructed means a channel or ditch constructed to convey surface water; also includes reconstructed natural channels.

Channel, natural means a channel that has occurred naturally due to the flow of surface waters or a channel that, although originally constructed by human activity, has taken on the appearance of a natural channel including a stable route and biological community.

Civil engineer means a person licensed by the State of Washington as a professional engineer in civil engineering.

Clearing means the conversion of native vegetated surface to a non-native surface.

Closed depression means an area greater than 5,000 square feet at overflow elevation that is low-lying and that has no or such a limited surface water outlet that the area acts as a stormwater retention facility. The primary loss of water volume from a closed depression is through evapotranspiration and discharge into the ground rather than surface flow.

Commercial and industrial site, for the purposes of defining a high-use site, means that portion of a site's developed area associated with an individual commercial or industrial business (e.g., the area occupied by the business's buildings and required parking).

Common plan of development or sale means a site where multiple separate and distinct construction activities may take place at different times or on different schedules, but still under a single plan. Examples include: 1) phased projects and projects with multiple filings or lots, even if the separate phases or filings/lots will be constructed under separate contract or by separate owners (e.g. a development where lots are sold to separate builders); 2) a development plan that may be phased over multiple years, but is still under a consistent plan for long-term development; and 3) projects in a contiguous area that may be unrelated but still under the same contract, such as construction of a building extension and a new parking lot at the same facility.

DRAFT

Compensatory storage means new excavated storage volume equivalent to the flood storage capacity eliminated by filling or grading within the flood fringe. Equivalent shall mean that the storage removed shall be replaced by equal volume between corresponding one foot contour intervals that are hydraulically connected to the floodway through their entire depth.

Construct or modify means to install a new drainage pipe/ditch or make improvements to an existing drainage pipe or ditch, for purposes other than maintenance, that either serves to concentrate previously unconcentrated surface and storm water runoff or serves to increase, decrease, or redirect the conveyance of surface and storm water runoff. Construct or modify does not include installation or maintenance of a driveway culvert installed as part of a single family residential building permit.

Construction stormwater pollution prevention plan (CSWPPP) means the plan and supporting documentation for implementing construction site ESC measures, pollution prevention BMPs, and spill control. The CSWPPP is a component of the engineering plans required for drainage review and has two component plans, the ESC plan and stormwater pollution prevention and spill (SWPPS) plan.

Conveyance means a mechanism for transporting water from one point to another, including pipes, ditches, and channels.

Conveyance system means the drainage facilities and features, both natural and constructed, that collect, contain, and provide for the flow of surface and storm water from the highest points on the land down to a receiving water. The natural elements of the conveyance system include swales and small drainage courses, streams, rivers, lakes, and wetlands. The constructed elements of the conveyance system include gutters, ditches, pipes, channels, and most flow control and water quality treatment facilities.

Conveyance system nuisance problem means a flooding or erosion problem that does not constitute a "severe flooding problem" or "severe erosion problem" and that results from the overflow of a constructed conveyance

system for runoff events less than or equal to a 10-year event. Examples include inundation of a shoulder or lane of a roadway, overflows collecting in yards or pastures, shallow flows across driveways, minor flooding of crawl spaces or unheated garages/outbuildings, and minor erosion. See "severe flooding problem" and "severe erosion problem."

Criteria exception means a department-approved exception to the criteria for granting an adjustment from the requirements of K.C.C. 9.05.050 and the *Surface Water Design Manual* based on demonstration that meeting the criteria will deny reasonable use of the applicant's property and the applicant will implement the best practicable alternative to meeting the criteria.

Critical area means any area that is subject to natural hazards or a land feature that supports unique, fragile or valuable natural resources including fish, wildlife or other organisms or their habitats or such resources that carry, hold or purify water in their natural state. "Critical area" includes the following areas: aquatic areas; coal mine hazard areas; critical aquifer recharge areas; erosion hazard areas; flood hazard areas; landslide hazard areas; seismic hazard areas; steep slope hazard areas; volcanic hazard areas; wetlands; wildlife habitat conservation areas; and wildlife habitat networks.

Critical area report means the report that evaluates all probable impacts of a development proposal on critical areas as specified in KCC 21A.24.110. The report is required for any development proposal that is subject to a critical area review by DDES under KCC 21A.24.100.

Critical aquifer recharge area means an area designated on the critical aquifer recharge area map adopted by KCC 20.70.020 as recodified and amended by the CAO that has a high susceptibility to ground water contamination that is located within a sole source aquifer or within an area approved in accordance with Chapter 246-290 WAC as a wellhead protection area for a municipal or district drinking water system. Susceptibility to ground water contamination occurs where there is a combination of permeable soils, permeable subsurface geology, and ground water close to the ground surface.

Critical depth means the depth that minimizes the specific energy *E* of the flow.

Critical Drainage Area means an area where the Department of Natural Resources and Parks (DNRP) has determined that additional drainage controls (beyond those in this manual) are needed to address a severe flooding, drainage, and/or erosion condition that poses an imminent likelihood of harm to the welfare and safety of the surrounding community. Critical Drainage Areas (CDAs) are formally adopted by administrative rule under the procedures specified in KCC 2.98. When CDAs are adopted, they are inserted in Reference Section 3 of this manual and their requirements are implemented through Special Requirement #1 (see Section 1.3.1).

Critical flow means flow at the critical depth and velocity.

Culvert means pipe or concrete box structure that drains an open channel, swale, or ditch under a roadway or embankment, typically with no catch basins or manholes along its length.

Cut slope means a slope formed by excavating overlying material to connect the original ground surface with a lower ground surface created by the excavation. A cut slope is opposed to a bermed slope, which is constructed by importing soil to create the slope.

DDES means the Department of Development and Environmental Services, which is the King County department responsible for ***drainage review*** of proposed projects, except those projects reviewed by the Department of Natural Resources and Parks (DNRP) as specified in KCC 9.04.070. For those projects in which ***drainage review*** is performed by DNRP, any reference to DDES in this manual may be assumed to be a reference to DNRP as appropriate.

Dead storage means the volume available in a depression in the ground below any conveyance system, or surface drainage pathway, or outlet invert elevation that could allow the discharge of surface and storm water runoff.

Dedication of land means setting aside and assigning ownership for a portion of a property for a specific use or function.

Depression storage means the amount of precipitation that is trapped in depressions on the surface of the ground.

DRAFT

Design engineer means the civil engineer who prepares the analysis, design, and engineering plans for an applicant's permit or approval submittal (see "civil engineer").

Detention means release of surface and storm water runoff from the site at a slower rate than it is collected by the drainage facility system, the difference being held in temporary storage.

Detention facility means a facility that collects water from developed areas and releases it at a slower rate than it enters the collection system. The excess of inflow over outflow is temporarily stored in a pond or a vault and is typically released over a few hours or a few days.

Determination of Non-Significance (DNS) means the written decision by the responsible official of the lead agency that a proposal is not likely to have a significant adverse environmental impact per the SEPA process, and therefore an EIS is not required.

Development means any activity that requires a permit or approval, including, but not limited to, a building permit, grading permit, shoreline substantial development permit, conditional use permit, special use permit, zoning variance or reclassification, subdivision, short subdivision, urban planned development, binding site plan, site development permit, or right-of-way use permit. "Development" does not include a Class I, II, III, or IV-S forest practice conducted in accordance with Chapter 76.09 RCW and Title 222 WAC or a class IV-G nonconversion forest practice, as defined in KCC 21A.06, conducted in accordance with Chapter 76.09 RCW and Title 222 WAC and a county approved forest management plan.

Direct discharge means undetained discharge from a proposed project to a "major receiving water."

Discharge means runoff, excluding offsite flows, leaving the proposed development through overland flow, built conveyance systems, or infiltration facilities.

Dispersed discharge means release of surface and storm water runoff from a drainage facility system such that the flow spreads over a wide area and is located so as not to allow flow to concentrate anywhere upstream of a drainage channel with erodible underlying granular soils or the potential to flood downstream properties.

Ditch means a constructed channel with its top width less than 10 feet at design flow.

Diversion means a change in the natural discharge location or runoff flows onto or away from an adjacent downstream property. See Core Requirement #1.

DNS means Determination of Non-Significance.

DNRP means Department of Natural Resources and Parks.

DOE means the state Department of Ecology.

Drainage means the collection, conveyance, containment, or discharge, or any combination thereof, of surface and storm water runoff.

Drainage area means an area draining to a point of interest.

Drainage basin means an area draining to a point of interest.

Drainage channel means a drainage pathway with well-defined bed and banks indicating frequent conveyance of surface and storm water runoff.

Drainage course means a pathway for watershed drainage often characterized by wet soil vegetation and often intermittent in flow.

Drainage easement means a legal encumbrance that is placed against a property's title to reserve specified privileges for the users and beneficiaries of the drainage facilities contained within the boundaries of the easement.

Drainage facility means a constructed or engineered feature that collects, conveys, stores, or treats surface and storm water runoff. A drainage facility includes, but is not limited to, a constructed or engineered stream, pipeline, channel, ditch, gutter, lake, wetland, closed depression, flow control or water quality treatment facility, erosion and sedimentation control facility, and other structure and appurtenance that provides for drainage.

DRAFT

Drainage pathway means the route that surface and storm water runoff follows downslope as it leaves any part of the site.

Drainage plan means a plan that depicts the drainage improvements and mitigation measures proposed for a particular project and includes any documentation/technical information necessary for construction and determination of compliance with drainage requirements. The drainage plan can be an "engineering plan" or "limited scope" engineering plan prepared for drainage review purposes as described in Chapter 2 of the *Surface Water Design Manual (SWDM)*, or it can be a "small project drainage plan" as described in Appendix C of the *SWDM*.

Drainage review means an evaluation by King County staff of a proposed project's compliance with the drainage requirements in the *Surface Water Design Manual*. The types of drainage review include: Small Project Dainage Review, Targeted Drainage Review, Full Drainage Review, and Large Project Drainage Review.

Dry Season means May 1 to September 30.

Easement means the legal right to use a parcel of land for a particular purpose. It does not include fee ownership, but it may restrict the owner's use of the land.

Effective impervious fraction means the fraction of actual total impervious area connected to a drainage system. These figures should be used in the absence of detailed surveys or physical inspection (e.g., via pipe, channel, or short sheet flow path).

EIS means Environmental Impact Statement.

Embankment means a structure of earth, gravel, or similar material raised to form a pond bank or foundation for a road.

Energy dissipater means any means by which the total energy of flowing water is reduced. In stormwater design, it is usually a mechanism that reduces velocity prior to, or at, discharge from an outfall in order to prevent erosion. Energy dissipaters include rock splash pads, drop manholes, concrete stilling basins or baffles, and check dams.

Energy gradient means the slope of the specific energy line (i.e., the sum of the potential and velocity heads).

Engineering geologist means a person licensed by the State of Washington as a geologist specializing in evaluating geologic site characteristics to determine the responses of geologic processes and materials to development activities, such as removal of vegetation; construction activities such as earthwork; applying loads in foundations and embankments; use of earth materials in construction; and modifying ground water flow.

Engineering plan means a plan prepared and stamped by a licensed civil engineer that depicts improvements and mitigation measures proposed for a particular site and includes supporting documentation and technical information. For drainage review purposes, an engineering plan includes a Technical Information Report (TIR), Site Improvement Plans, and a Construction Stormwater Pollution Prevention Plan (CSWPPP), which are described in detail in Chapter 2 of the *Surface Water Design Manual*.

Engineering review means an evaluation by the Department of Development and Environmental Services (or its successor agency) of a proposed project's compliance with the drainage requirements in the *Surface Water Design Manual* and with other King County requirements.

Enhancement means an increase in ecological functions and value, desirability, or attractiveness of an environmental feature.

Environmental Impact Statement (EIS) means a document that discusses the likely significant adverse impacts of a proposal, ways to lessen the impacts, and alternatives to the proposal. It is required by the national and state environmental policy acts when projects are determined to have the potential for significant environmental impact.

Equivalent area means the area tributary to the receiving water body equal to or less than the shortest, straight-line distance from the receiving water body (or regional facility) to the farthest point of the proposed project.

Erodible granular soils means soil materials that are easily eroded and transported by running water, typically fine or medium grained sand with minor gravel, silt, or clay content. Such soils are commonly described as Everett or Indianola series soil types in the SCS classification. Also included are any soils showing examples of existing

DRAFT

severe stream channel incision as indicated by unvegetated streambanks standing over two feet high above the base of the channel.

Erosion means detachment and transport of soil or rock fragments by water, wind, ice, etc.

Erosion and sediment control (ESC) means any temporary or permanent measures taken to reduce erosion, control siltation and sedimentation, and ensure that sediment-laden water does not leave the site or enter into wetlands or aquatic areas.

Erosion Hazard Area means an area underlain by soils that are subject to severe erosion when disturbed. These soils include, but are not limited to:

- Those classified as having a severe to very severe erosion hazard according to the USDA Soil Conservation Service, the 1990 Snoqualmie Pass Area Soil Survey, the 1973 King County Soils Survey (or any subsequent revisions or addition by or to these sources) such as any occurrence of River Wash (Rh) or Coastal Beaches (Cb) and any of the following when they occur on slopes inclined at 15% or more: Alderwood gravely sandy loam (AgD), Alderwood-Kitsap (AkF), Beausite gravelly sandy loam (BeD and BeF), Kitsap silt loam, (KpD), Ovall gravelly sandy loam (OvP and OvF), Ragnar fine sandy loam (Rad), and Ragnar-Indianola Association (RdE); and
- Those that represent significant risk to sensitive downstream receiving water due to proximity to those receiving waters and the size of the disturbed area.

ESC plan means the plan and supporting documentation for implementing erosion and sediment control measures on the project site. This plan is a component of the construction stormwater pollution prevention plan (CSWPPP), which is submitted with the engineering plans required for drainage review.

ESC Standards means the requirements and specifications for design, maintenance, and implementation of erosion and sediment control measures specified in Appendix D of the King County *Surface Water Design Manual*.

Eutrophic means a condition of a water body in which excess nutrients, particularly phosphorous, stimulates the growth of aquatic plant life usually resulting in the depletion of dissolved oxygen. Thus, less dissolved oxygen is available to other aquatic life.

Eutrophication means the process where excess nutrients in water lead to excessive growth of aquatic plants.

Evapotranspiration is the collective term for the processes of evaporation and plant transpiration by which water is returned to the atmosphere as a vapor.

Exceedance probability means the probability that the flow will be equaled or exceeded in any given year.

Existing conditions means the conditions of drainage, vegetation, and impervious cover at the time of analysis.

Existing offsite conditions means the conditions of drainage, vegetation, and impervious cover offsite, including any problems recorded or observed in the study area (except on the proposed project site), at the time of analysis (see "existing site conditions").

Existing site conditions means the conditions of drainage, vegetation, and impervious cover onsite at present or some time in the past depending on what, if any, land conversion activity has occurred on the site since May 1979 when King County first required flow control on developments adding more than 5,000 square feet of new impervious surface. If a drainage plan has been approved by the County since May 1979 for any land conversion activity which includes the addition of more than 5,000 square feet of new impervious surface, then "existing site conditions" are those created by the site improvements and drainage facilities constructed per the approved engineering plans. Otherwise, "existing site conditions" are those that existed prior to May 1979 as determined from aerial photographs and, if necessary, on knowledge of individuals familiar with the area. The intent is to mitigate unaddressed impacts created by site alterations/improvements, such as clearing, which have occurred since May 1979(see Core Requirement #3). *Note: Air photos flown in 1979 are available for viewing at the map counter of the King County Department of Transportation and at DDES.*

Experimental design adjustment means an adjustment used for proposing new designs or methods which are different from those in this manual, which are not uniquely site specific, and for which data sufficient to establish functional equivalence do not exist.

DRAFT

FEMA means Federal Emergency Management Agency

FEMA floodway means a distinct floodway definition that describes the limit to which encroachment into the natural conveyance channel can cause one foot or less rise in water surface elevation.

Fertilizer means any material or mixture used to supply one or more of the essential plant nutrient elements.

Filter strip means a grassy area with gentle slopes which treats stormwater runoff from adjacent areas before it concentrates into a discrete channel.

Financial guarantee means a form of financial security posted to do one or more of the following: ensure timely and proper completion of improvements; ensure compliance with the King County Code; or provide secured warranty of materials, workmanship of improvements and design. "Financial guarantees" include assignments of funds, cash deposit, surety bonds, or other forms of financial security acceptable to the Director of the Department of Development and Environmental Services. "Performance guarantee," "maintenance guarantee," and "defect guarantee" are considered subcategories of financial guarantee.

FIRM means Flood Insurance Rate Map.

Flood fringe means that portion of the floodplain outside of the floodway which is covered by floodwaters during the base flood; it is generally associated with standing water rather than rapidly flowing water.

Flood Hazard Area means any area subject to inundation by the base flood or risk from channel migration including, but not limited to, an aquatic area (e.g., streams, lakes, etc.), wetland, or closed depression. A flood hazard area may consist of the following components: 100-year floodplain, zero-rise flood fringe, zero-rise floodway, FEMA floodway, and channel migration zones.

Flood hazard reduction plan means a plan and all implementing programs, regulations, and procedures including, but not limited to, capital projects, public education activities and enforcement programs for reduction of flood hazards and prepared in accordance with RCW 86.12.200.

Flood Insurance Rate Map (FIRM) means the official map on which the Federal Insurance Administration has delineated flood hazard areas, floodways, and risk premium zones.

Flood Insurance Study means the official report provided by the Federal Insurance Administration that includes flood profiles and the FIRM.

Floodplain means the total area subject to inundation by the base flood including the flood fringe and floodway.

Flood-proofing means adaptations to ensure that a structure is substantially impermeable to the passage of water below the flood protection elevation, and that it resists hydrostatic and hydrodynamic loads and effects of buoyancy.

Flood protection elevation means an elevation that is one foot above the base flood elevation.

Flood protection facility means any levee, berm, wall, enclosure, raised bank, revetment, constructed bank stabilization, or armoring that is commonly recognized by the community as providing significant protection to a property from inundation by floodwaters.

Flood routing means an analytical technique used to compute the effects of system storage and system dynamics on the shape and movement of flow; represented by a hydrograph.

Floodway means the channel of the river or stream and those portions of the adjoining floodplain which are reasonably required to carry and discharge the base flood flow (see "zero-rise floodway").

Flow control area means a geographic area of the County within which proposed projects must comply with the flow control facility requirements adopted for that area as part of this manual. There are three such areas that comprise unincorporated King County: the Basic Flow Control Area, the Conservation Flow Control Area, and the Flood Problem Flow Control Area. These areas are mapped on the Flow Control Applications Map adopted with this manual and on the County's Geographic Information System.

Flow control BMP means a method or design for dispersing, infiltrating or otherwise reducing or preventing development-related increases in surface and storm water runoff at, or near, the sources of those increases. Flow control BMPs include, but are not limited to, preservation and use of native vegetated surfaces to fully disperse

DRAFT

runoff; use of other pervious surfaces to disperse runoff; roof downspout infiltration; permeable pavements; rainwater harvesting; vegetated roofs; and reduction of development footprint.

Flow control BMP design and maintenance details means the diagrams/figures, design specifications, and maintenance instructions for each flow control BMP proposed on an individual site/lot that does not contain a flow control or water quality facility. These details are intended to be recordable to facilitate attachment to the declaration of covenant and grant of easement required for implementation of flow control BMPs on individual sites/lots. DDES may waive all or a portion of this component if they determine there is no need to specify design details or maintenance instructions for certain proposed BMPs.

Flow control BMP site plan (FCBMP site plan) means a scale drawing of an individual site/lot used to show how required flow control BMPs will be applied to the target surfaces of an individual site/lot that does not contain a flow control or water quality facility. The FCBMP site plan is intended to be a recordable document (or reducible to a recordable document) that can be attached to the declaration of covenant and grant of easement required for implementation of flow control BMPs on individual sites/lots. DDES may allow a written version of this plan if they determine there is no need to illustrate the size and location of proposed flow control BMPs.

Flow control facility means a drainage facility designed to mitigate the impacts of increased surface and storm water runoff generated by site development in accordance with the drainage requirements in KCC Chapter 9.04. Flow control facilities are designed either, to hold water for a considerable length of time and then release it by evaporation, plant transpiration, or infiltration into the ground, or to hold runoff for a short period of time and then release it to the conveyance system.

Flow duration means the aggregate time that peak flows are at or above a particular flow rate (e.g., the amount of time over the last 50 years that peak flows were at or above the 2-year flow rate).

Flow frequency means the inverse of the probability that the flow will be equaled or exceeded in any given year (the *exceedance probability*). For example, if the exceedance probability is 0.01, or 1 in 100, that flow is referred to as the 100-year flow.

Flowpath means the route that surface and storm water runoff follows between two points of interest.

Flow-through system means a retention/detention facility where inflows are routed through the storage facility before discharge through the flow restrictor.

Freeboard means the vertical distance between the design water surface elevation and the elevation of the structure or facility which contains the water.

Full build-out conditions means the tributary area is developed to its full zoning potential except where there are existing sensitive areas, open space tracts, and/or native growth protection easements/covenants.

Full Drainage Review means the evaluation required by KCC 9.04.030 of a proposed project's compliance with the full range of core and special requirements in Chapter 1 of this manual. Full Drainage Review is required for any proposed project, unless the project is subject to small project drainage review, targeted drainage review, or large project drainage review, that (1) would result in two thousand square feet or more of new impervious surface; (2) would result in thirty-five thousand square feet or more of new pervious surface; (3) is a redevelopment project on one or more parcels where the total of new and replaced impervious surface is five thousand square feet or more and when the valuation of proposed improvements exceeds fifty percent of the assessed value of the existing site improvements, including interior improvements and excluding required mitigation and frontage improvements.

Fully dispersed means the runoff from an impervious surface or non-native pervious surface has dispersed per the criteria for fully dispersed surface in Section 1.2.3.2.C.

Geologist means a person who has earned a degree in geology from an accredited college or university or who has equivalent educational training, and who has at least five years of experience as a practicing geologist or four years of experience and at least two years post-graduate study, research, or teaching. The practical experience shall include at least three years work in applied geology and landslide evaluation, in close association with qualified practicing geologists or geotechnical professional/civil engineers.

Geomorphically significant flow means a flow capable of moving sediment.

DRAFT

Geotechnical engineer means a civil engineer, licensed by the State of Washington, who has at least four years of professional employment as a geotechnical engineer in responsible charge, including experience with landslide evaluation. Geotechnical engineers specialize in the design and construction aspects of earth materials.

Groundwater means underground water usually found in aquifers. Groundwater usually originates from infiltration. Wells tap the groundwater for water supply uses.

Gully means a channel caused by the concentrated flow of surface and stormwater runoff over unprotected erodible land.

Habitable building means any residential, commercial, or industrial building that is equipped with a permanent heating or cooling system and an electrical system.

Habitat means the specific area or environment in which a particular type of plant or animal lives and grows.

Hardpan means a cemented or compacted and often clay-like layer of soil that is impenetrable by roots.

Harmful pollutant means a substance that has adverse effects to an organism including death, chronic poisoning, impaired reproduction, cancer, or other effects.

High infiltration rates means those in excess of 9 inches per hour as measured by the EPA method or the double ring infiltrometer method (ASTM D 3385). These will typically be course sand or gravel soil with low silt content.

High-use site means a commercial or industrial site that (1) has an expected average daily traffic (ADT) count equal to or greater than 100 vehicles per 1,000 square feet of gross building area; (2) is subject to petroleum storage or transfer in excess of 1,500 gallons per year, not including delivered heating oil; or (3) is subject to use, storage, or maintenance of a fleet of 25 or more diesel vehicles that are over 10 tons net weight (trucks, buses, trains, heavy equipment, etc.). Also included is any road intersection with a measured ADT count of 25,000 vehicles or more on the main roadway and 15,000 vehicles or more on any intersecting roadway, excluding projects proposing primarily pedestrian or bicycle use improvements. For the purposes of this definition, *commercial and industrial site* means that portion of a site's developed area associated with an individual commercial or industrial business (e.g., the area occupied by the business's buildings and required parking).

DRAFT

Historic site conditions mean those which existed on the site prior to any development in the Puget Sound region. For lands not currently submerged (i.e., outside the ordinary high water mark of a lake, wetland, or stream), "historic site conditions" shall be assumed to be forest cover unless reasonable, historic, site-specific information is provided to demonstrate a different vegetation cover. In some stream basins, as allowed per Exception 1 of the Conservation Flow Control Areas facility requirement, historic site conditions for lands not currently submerged may be assumed to be 75% forest, 15% grass, and 10% impervious surface.

Horton overland flow means a runoff process whereby the rainfall rate exceeds the infiltration rate, and the excess precipitation flows downhill over the soil surface.

Hydraulically connected means connected through surface flow or water features such as wetlands or lakes.

Hydraulic gradient means slope of the potential head relative to a fixed datum.

Hydrogeologist means a person licensed by the State of Washington as a geologist specializing in the study and analysis of ground water and other fluids as they move within the geologic environment. This includes ground water well design, construction supervision, and testing; remediation of soil and ground water at contaminated sites; and impact analysis of proposed man made structures on the environment as they may relate to water.

Hydrograph means a graph of runoff rate, inflow rate, or discharge rate past a specific point over time.

Hydrologic cycle means the circuit of water movement from the atmosphere to the earth and return to the atmosphere through various stages or processes such as precipitation, interception, runoff, infiltration, percolation, storage, evaporation, and transpiration.

Hydrologic soil groups means a soil characteristic classification system defined by the U.S. Soil Conservation Service in which a soil may be categorized into one of four soil groups (A, B, C, or D) based upon infiltration rate and other properties.

Impact means an adverse effect or harm, or the act of adversely affecting or harming.

Impervious surface means a hard surface area that either prevents or retards the entry of water into the soil mantle as under natural conditions before development; or that causes water to run off the surface in greater quantities or at an increased rate of flow from the flow present under natural conditions prior to development (see also "new impervious surface"). Common impervious surfaces include, but are not limited to, roof, walkways, patios, driveways, parking lots, or storage areas, areas that are paved, graveled or made of packed or oiled earthen materials or other surfaces that similarly impede the natural infiltration of surface and storm water. An open, uncovered flow control or water quality treatment facility shall not be considered as impervious surface. For the purposes of applying the impervious surface thresholds and exemptions contained in this manual, open water bodies, including onsite detention and water quality ponds, shall not be considered impervious surfaces. However, for the purposes of computing runoff, such water bodies shall be modeled as impervious surfaces as specified in Chapter 3.

Impoundment means a natural or man-made containment for surface water.

Improvement means a permanent, man-made, physical change to land or real property including, but not limited to, buildings, streets, driveways, sidewalks, crosswalks, parking lots, water mains, sanitary and storm sewers, drainage facilities, and landscaping.

Infiltration facility means a drainage facility designed to use the hydrologic process of water soaking into the ground (commonly referred to as percolation) to dispose of surface and storm water runoff.

Ingress/egress means the points of access to and from a property.

Inlet means a form of connection between the surface of the ground and a channel or pipe for the admission of surface and stormwater runoff.

Inlet control means a flow condition where the flow is governed by the culvert's inlet geometry.

Interflow means near-surface groundwater that moves laterally through the soil horizon following the hydraulic gradient of underlying relatively impermeable soils. When interflow is expressed on the surface, it is called a spring or seepage.

KCAS means King County Aerial Survey.

KCRS means *King County Road Standards*, which are available from the King County Department of Transportation Map Counter.

Lake means an area permanently inundated by water in excess of two meters (7 ft) deep and greater than twenty acres in size as measured at the ordinary high water mark.

Lake management plan means a plan describing the lake management recommendations and requirements adopted by public rule for managing water quality within individual lake basins.

Land disturbing activity means any activity that results in a change in the existing soil cover (both vegetative and non-vegetative and/or the existing soil topography. Land disturbing activities include, but are not limited to demolition, construction, clearing, grading, filling, excavation, and compaction. Land disturbing activity does not include tilling conducted as part of agricultural practices, landscape maintenance, or gardening.

Landscape management plan means a King County approved plan for defining the layout and long-term maintenance of landscaping features to minimize the use of pesticides and fertilizers, and to reduce the discharge of suspended solids and other pollutants.

Landslide means episodic downslope movement of a mass of soil or rock; includes but is not limited to rockfalls, slumps, mudflows, and earthflows.

Landslide Hazard Area means an area subject to a severe risk of landslide such as:

1. Any area with a combination of:
   - Slopes steeper than 15%;
   - Impermeable soils, such as silt and clay, frequently interbedded with granular soils, such as sand and gravel; and

DRAFT

- Springs or groundwater seepage;

2. Any area which has shown movement during the Holocene epoch, 10,000 years ago to the present, or which is underlain by mass wastage debris from that epoch;
3. Any area potentially unstable as a result of rapid stream incision, stream bank erosion or undercutting by wave action;
4. Any area which shows evidence of, or is at risk from, snow avalanches, or
5. Any area located on an alluvial fan, presently or potentially subject to inundation by debris flows or deposition of stream-transported sediments.

Landslide Hazard Drainage Area means a specially mapped area where the County has determined that overland flows from new projects will pose a significant threat to health and safety because of their close proximity to a landslide hazard area that is on a slope steeper than 15% (a delineation of the known landslide hazard areas can be found in King County's *Sensitive Areas Map Folio).* Such areas are delineated on the Landslide Hazard Drainage Areas map adopted with this manual.

Land surveyor means a person licensed by the State of Washington as a professional land surveyor.

Large Project Drainage Review means the evaluation required by KCC 9.04.030 for development proposals that are large and/or involve resources or problems of special sensitivity or complexity. Large Project Drainage Review is required of any project that (1) has an urban plan development land use designation in the King County Comprehensive Plan land use map, as defined in K.C.C. 21A.06.1340; (2) would, at full buildout of the project site, result in fifty acres or more of new impervious surface within a drainage subbasin or a number of subbasins hydraulically connected across subbasin boundaries; or (3) has a project site of fifty acres or more within a critical aquifer recharge area, as defined in the K.C.C. Title 21A. Large Project Drainage Review entails preparation of a master drainage plan (MDP) or limited scope MDP which is reviewed and approved by DDES.

Leachable materials, wastes, or chemicals means those substances which, when exposed to rainfall, measurably alter the physical or chemical characteristics of the rainfall runoff; examples include erodible soil, uncovered process wastes, manure, fertilizers, oily substances, ashes, kiln dust, garbage dumpster leakage, etc.

Leaf compost filter (a.k.a. StormFilter™) means a patented treatment device that uses a specially prepared and patented compost product to remove pollutants from stormwater.

Level pool routing means the basic technique of storage routing used in King County for sizing and analyzing detention storage and determining water levels for ponding water bodies. The level pool routing technique is based on the continuity equation: Inflow - Outflow = Change in storage.

Local drainage system means any natural or constructed drainage feature that collects and concentrates runoff from the site and discharges it downstream.

Lowest floor means the lowest enclosed area (including basement) of a structure. An area other than a basement area that is used solely for parking of vehicles, building access, or storage is not considered a building's lowest floor, provided that the enclosed area meets all of the structural requirements of the flood hazard standards.

Maintenance means those usual activities taken to prevent a decline, lapse, or cessation in the use of currently serviceable structures, facilities, equipment, or systems if there is no expansion of the structure, facilities, equipment, or system and there are no significant hydrologic impacts. Maintenance includes the repair or replacement of non-functional facilities and the replacement of existing structures with different types of structures, if the repair or replacement is required to meet current engineering standards or is required by one or more environmental permits and the functioning characteristics of the original facility or structure are not changed. For the purposes of applying this definition to the thresholds and requirements of this manual, DDES will determine whether the functioning characteristics of the original facility or structure will remain sufficiently unchanged to consider replacement as maintenance.

Major receiving water means a large receiving water that has been determined by King County to be safe for the direct discharge of increased runoff from a proposed project without a flow control facility, subject to the restrictions on such discharges set forth in Core Requirement #3, Section 1.2.3. A list of major receiving waters is

DRAFT

provided in Section 1.2.3.1. Major receiving waters are also considered safe for application of Basic WQ treatment in place of otherwise required Enhanced Basic WQ treatment (see Section 1.2.8.1).

Mass wasting means the movement of large volumes of earth material downslope.

Master Drainage Plan (MDP) means a comprehensive drainage control plan intended to prevent significant adverse impacts to the natural and man-made drainage system, both on and offsite.

Maximum extent practicable means the use of best management practices that are available and capable of being designed, constructed and implemented in a reliable and effective manner including, but not limited to, consideration of site conditions and cost.

MDNS means a Mitigated Determination of Non-Significance per SEPA (see "DNS" and "mitigation").

Mean annual storm means a statistically derived rainfall event derived by dividing the annual rainfall in an area by the number of storm events per year, as defined by the Nationwide Urban Runoff Program studies (U.S. Environmental Protection Agency, "Results of the Nationwide Urban Runoff Program," 1986).

Metals means elements, such as mercury, lead, nickel, zinc and cadmium, that are of environmental concern because they do not degrade over time. Although many are necessary nutrients, they are sometimes magnified in the food chain, and they can be toxic to life in high enough concentrations.

Mitigation means an action taken to compensate for adverse impacts to the environment resulting from a development activity or alteration.

Modified site improvement plan means a limited or simplified "site improvement plan" used for some projects in Targeted Drainage Review and/or where major improvements are not proposed.

Monitor means to systematically and repeatedly measure something in order to track changes.

Monitoring means the collection and analysis of data by various methods for the purposes of understanding natural systems and features, evaluating the impacts of development proposals on the biological, hydrologic, and geologic elements of such systems, and assessing the performance of mitigation measures imposed as conditions of development.

DRAFT

National Pollutant Discharge Elimination System (NPDES) means the part of the federal Clean Water Act which requires point source discharges to obtain permits. These permits, referred to as NPDES permits, are administered by the Washington State Department of Ecology.

Native Growth Protection Easements (NGPE) means an easement granted to the County for the protection of native vegetation within a sensitive area or its associated buffer. This term was used prior to December 1990 when it was replaced with "sensitive area." As of January 2005, the term "sensitive" is replaced with "critical area;" thus, all references to critical areas in this manual also apply to sensitive areas and native growth protection easements.

Native growth retention area means the area of native vegetated surface set aside by a covenant, easement, or tract for purposes of implementing a flow control BMP.

Native vegetated surface means a surface in which the soil conditions, ground cover, and species of vegetation are like those of the original native condition for the site. More specifically, this means (1) the soil is either undisturbed or has been treated according to the "native vegetated landscape" specifications in Appendix C, Section C.2.1.8; (2) the ground is either naturally covered with vegetation litter or has been top-dressed with 4 inches of hog fuel consistent with the native vegetated landscape specifications in Appendix C; and (3) the vegetation is either (a) comprised predominantly of plant species, other than noxious weeds, that are indigenous to the coastal region of the Pacific Northwest and that reasonably could have been expected to occur naturally on the site or (b) comprised of plant species specified for a native vegetated landscape in Appendix C. Examples of these plant species include trees such as Douglas fir, western hemlock, western red cedar, alder, big-leaf maple and vine maple; shrubs such as willow, elderberry, salmonberry and salal; and herbaceous plants such as sword fern, foam flower, and fireweed.

Natural channel (see "channel, natural")

Natural discharge area means an onsite area tributary to a single natural discharge location (see "natural discharge location").

Natural discharge location means the location where surface and storm water runoff leaves (or would leave if not infiltrated or retained) the site or project site under existing site conditions.

Natural onsite drainage feature means a natural swale, channel, stream, closed depression, wetland, or lake.

New conveyance system elements means those that are proposed to be constructed where there are no existing constructed conveyance elements.

New impervious surface means the addition of a hard or compacted surface like roofs, pavement, gravel, or dirt; or the addition of a more compacted surface, like paving over pre-existing dirt or gravel.

New pervious surface means the conversion of a native vegetated surface or other native surface to a non-native pervious surface (e.g., conversion of forest or meadow to pasture land, grass land, cultivated land, lawn, landscaping, bare soil, etc.), or any alteration of existing non-native pervious surface that significantly increases surface and storm water runoff (e.g., conversion of pasture land, grass land, or cultivated land to lawn, landscaping, or bare soil).

New PGIS means "new impervious surface" that is "pollution-generating impervious surface." See "new impervious surface" and "pollution-generating impervious surface."

New PGPS means "new pervious surface" that is "pollution-generating pervious surface." See "new pervious surface" and "pollution-generating pervious surface."

NGPE means Native Growth Protection Easement.

NGVD means National Geodetic Vertical Datum (see "base flood elevation").

Non-native pervious surface means a pervious surface that does not meet the definition of a "native vegetated surface."

Normal depth means the depth of uniform flow. This is a unique depth of flow for any combination of channel characteristics and flow conditions. Normal depth is found from Manning's equation.

NPDES means National Pollutant Discharge Elimination System.

Nutrient means one of the essential chemicals needed by plants or animals for growth. Excessive amounts of nutrients can lead to degradation of water quality and excessive algae growth. Some nutrients can be toxic at high concentrations.

Offsite means any area lying upstream of the site that drains onto the site and any area lying downstream of the site to which the site drains (see "site").

Offsite flows means runoff conveyed to a proposed project from adjacent properties.

Oil/water separator means a vault, usually underground designed to provide a quiescent environment to separate oil from water. Floatables (e.g., styrofoam) are also removed.

One-year capture zone means the surface area overlying the portion of the aquifer which contributes water to the well within a one year period.

Onsite means on the site that includes the proposed development (see "site").

Ordinary high water mark means the mark that will be found by examining the bed and banks of a stream, lake, pond, or tidal water and ascertaining where the presence and action of waters are so common and usual, and so long maintained in all ordinary years as to mark upon the soil a vegetative character distinct from that of the abutting upland. In an area where the ordinary high water mark cannot be found, the line of mean high water in areas adjoining freshwater or mean higher high tide in areas adjoining saltwater is the "ordinary high water mark." In an area where neither can be found, the top of the channel bank is the "ordinary high water mark." In braided channels and alluvial fans, the ordinary high water mark or line of mean high water include the entire water or stream feature.

DRAFT

Orifice means an opening with closed perimeter (usually sharp-edged) and of regular form in a plate, wall, or partition through which water may flow, generally used for the purpose of measurement or control of such water.

Outfall means a point where collected and concentrated surface and storm water runoff is discharged from a pipe system or culvert.

Outlet control means a flow condition where the flow is governed by a combination of inlet geometry, barrel characteristics, and tailwater elevation.

Outwash soil means a soil formed from highly permeable sands and gravels.

Overtopping means to flow over the limits of a containment or conveyance element.

Parcel redevelopment project means a redevelopment project on a site comprised of one or more parcels of land on which an assessed value of existing site improvements has been determined by the King County Assessors Office.

Permeable soils means soil materials with a sufficiently rapid infiltration rate so as to greatly reduce or eliminate surface and storm water runoff.

Perviousness means related to the size and continuity of void spaces in soils; related to a soil's infiltration rate.

Pesticide means any substance (usually chemical) used to destroy or control organisms; includes herbicides, insecticides, algaecides, fungicides, and others. Many of these substances are manufactured and are not naturally found in the environment. Others, such as pyrethrum, are natural toxins which are extracted from plants and animals.

pH means a measure of the alkalinity or acidity of a substance found by measuring the concentration of hydrogen ions in the substance. The pH scale ranges from 1 to 14 with 1 being highly acidic, 14 highly basic, and 7 neutral. Most natural waters in King County are slightly acidic having a pH of around 6.5.

Physiographic means characteristics of the natural physical environment (including hills).

Pipe system means a network of storm drain pipes, catch basins, manholes, inlets, and outfalls designed and constructed to convey surface water.

Plat means a map or representation of a subdivision showing the division of a tract or parcel of land into lots, blocks, streets, or other divisions and dedications.

Point discharge means the release of collected and/or concentrated surface and storm water runoff from a pipe, culvert, or channel.

Point of compliance means the location where detention performance standards are evaluated. In most cases, the point of compliance is the outlet of the proposed detention facility where, for example, 2- and 10-year discharges must match predevelopment 2- and 10-year peak flow rates.

Pollution-generating impervious surface means an impervious surface considered to be a significant source of pollutants in stormwater runoff. Such surfaces include those that are *subject to vehicular use*[1] or storage of *erodible or leachable materials, wastes, or chemicals*,[2] and that receive direct rainfall or the run-on or blow-in of rainfall.[3] Metal roofs are also considered to be PGIS unless they are treated to prevent leaching.

Pollution-generating pervious surface means a non-impervious surface considered to be a significant source of pollutants in surface and storm water runoff. Such surfaces include those subject to use of pesticides and fertilizers,

[1] *Subject to vehicular use* means the surface, whether paved or not, is regularly used by motor vehicles. The following surfaces are considered regularly used by motor vehicles: roads, unvegetated road shoulders, bike lanes within or not separated from the traveled lane of a roadway, driveways, parking lots, unfenced firelanes, diesel equipment storage yards, and airport runways. The following surfaces are not considered regularly used by motor vehicles: road shoulders primarily used for emergency parking, paved bicycle pathways, bicycle lanes adjacent to unpaved or paved road shoulders primarily used for emergency parking, fenced firelanes, and infrequently used maintenance access roads.

[2] *Erodible or leachable materials, wastes, or chemicals* are those substances that, when exposed to rainfall, measurably alter the physical or chemical characteristics of the rainfall runoff (examples include erodible soil, uncovered process wastes, manure, fertilizers, oily substances, ashes, kiln dust, garbage dumpster leakage, etc.).

[3] A covered parking area would be considered pollution-generating if runoff from uphill could regularly run through it, or if rainfall could regularly blow in and wet the pavement surface. The same parking area would not be included if it were enclosed by walls or if a low wall and berm prevented stormwater from being blown in or from running onto the covered area.

DRAFT

loss of soil, or the use or storage of erodible or leachable materials, wastes, or chemicals. Such surfaces include, but are not limited to, the lawn and landscaped areas of residential or commercial ***sites***, golf courses, parks, sports fields, and County-standard grassed modular grid pavement.

Porosity means the property of having pores (small openings) that allow the passage of water.

Preapplication means the meeting or form used by an applicant for a development permit to present initial project intentions to the Department of Development and Environmental Services. Preapplication does not mean application.

Preapplication adjustment means an adjustment that can be requested prior to permit application. It is useful for when an adjustment decision is needed to determine if a project is feasible, or when the approval conditions must be known to determine if a project is viable before funding a full application. The approval of preapplication adjustments is tied by condition to the project proposal presented at a preapplication meeting with DDES.

Project means any proposed action to alter or develop a site that may also require~~s~~ drainage review.

Project site means that portion of a site and any offsite areas subject to proposed project activities, alterations, and improvements including those required by this manual (see "site").

R/D means retention/detention facility, another term for flow control facility.

Reach means a length of channel with uniform characteristics.

Receiving waters means bodies of water or surface water systems receiving water from upstream man-made or natural systems.

Recharge means the flow to groundwater from the infiltration of surface and storm water runoff.

Redevelopment project means a project that proposes to add, replace, or modify impervious surface (for purposes other than a residential subdivision or maintenance) on a site that is already substantially developed in a manner consistent with its current zoning or with a legal non-conforming use or has an existing impervious surface coverage of 35% or more. The following examples illustrate the application of this definition.

DRAFT

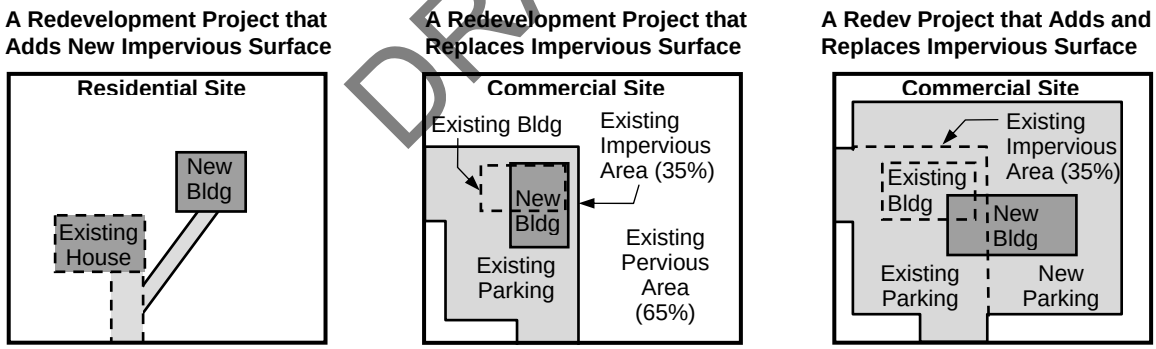

Regional detention facility means a stormwater quantity control structure designed to prevent or correct the existing or future surface water runoff problems of a basin or subbasin as defined by the King County Department of Natural Resources and Parks (DNRP).

Regional scale factor means a geographically variable multiplier applied to the flow time series to account for the variations in rainfall amounts, and hence runoff, between the project site and the rainfall station (Landsburg or Sea-Tac).

Release rate means the computed peak rate of surface and storm water runoff from a site.

Replaced impervious surface means any existing impervious surface on the project site that is proposed to be removed and re-established as impervious surface, excluding impervious surface removed for the sole purpose of installing utilities or performing maintenance. For the purposes of this definition, *removed* means the removal of buildings down to bare soil or the removal of Portland cement concrete (PCC) slabs and pavement or asphaltic concrete (AC) pavement ~~together with any asphalt treated base (ATB)~~. It does not include the removal of

pavement material through grinding or other surface modification unless the entire layer of PCC or AC ~~together with ATB~~ is removed.

Replaced PGIS means "replaced impervious surface" that is "pollution-generating impervious surface." See "replaced impervious surface" and "pollution-generating impervious surface."

Resource stream means a stream section mapped and rated by King County as being a regionally significant stream reach that harbors significant concentrations of fish for some period in their life cycle.

Retention means the process of collecting and holding surface and storm water runoff with no surface outflow.

Retention/detention facility (R/D) means a type of drainage facility designed either to hold water for a considerable length of time and then release it by evaporation, plant transpiration, and/or infiltration into the ground, or to hold surface and storm water runoff for a short period of time and then release it to the surface and storm water conveyance system.

Retrofitting means the renovation of an existing site, structure, or facility to meet changed conditions or to improve mitigation of stormwater flow and water quality impacts.

Riparian means pertaining to the banks of rivers and streams, and sometimes also wetlands, lakes, or tidewater.

Riprap means a facing layer or protective mound of stones placed to prevent erosion or sloughing of a structure or embankment due to the flow of surface and storm water runoff.

Runoff means that portion of water originating from rainfall and other precipitation that flows over the surface or just below the surface from where it fell and is found in drainage facilities, rivers, streams, springs, seeps, ponds, lakes, wetlands, and shallow groundwater as well as on ground surfaces.

Runoff files means a database of continuous flows pre-simulated by HSPF.

Runoff Files Method means a hydrologic modeling tool for western King County to produce results (design flows, detention pond sizing, etc.) comparable to those obtained with the U.S. Environmental Protection Agency's HSPF model but with significantly less effort. This is achieved by providing the user with a set of 15 minute and hourly time series files of unit area land surface runoff ("runoff files") pre-simulated with HSPF for a range of land cover conditions and soil types within King County.

Run-on or blow-in of rainfall means stormwater from uphill that could regularly run through an area, or rainfall that could regularly be blown in and wet the pavement surface.

Salmon conservation plan means a plan and all implementing regulations and procedures including, but not limited to, land use management adopted by ordinance, capital projects, public education activities and enforcement programs for conservation and recovery of salmon within a water resource inventory area designated by the state under WAC 173-500-040.

Salmonid means a member of the fish family Salmonidae. In King County salmonid species include Chinook, Coho, chum, sockeye, and pink salmon; cutthroat, rainbow, and brown trout and steelhead; Dolly Varden, brook trout, char, kokanee, and whitefish.

Sand filter means a depression or basin with the bottom made of a layer of sand. Stormwater is treated as it percolates through the sand layer and is discharged via a central collector pipe.

Scour means erosion of channel banks due to excessive velocity of the flow of surface and stormwater runoff.

SCS means Soil Conservation Service, U.S. Department of Agriculture.

SCS Method means a hydrologic analysis based on the Curve Number method (*National Engineering Handbook* - Section 4: Hydrology, August 1972).

Seasonal high groundwater level means the highest elevation attained by groundwater, as measured by piezometers or wells, during any calendar year.

Sediment means fragmented material which originates from weathering and erosion of rocks or unconsolidated deposits, and which is transported by, suspended in, or deposited by water.

DRAFT

Sedimentation means the depositing or formation of sediment.

Sensitive area means the area delineated on a site which contains wetlands, streams, steep slopes, hazard areas, landslide hazard areas, and their required buffers. Sensitive areas are recorded as tracts or sensitive area notice on titles. *Note, effective January 1, 2005, the term "sensitive area" is replaced with the term "critical area" in KCC 21A.24.*

Sensitive area setback area means the area delineated on a site which contains wetlands, streams, steep slopes, hazard areas, landslide hazard areas, and their required buffers. This term was used from November 1990 through December 1995. References to critical areas and their required buffers in this manual shall also apply to sensitive area setback areas.

Sensitive area tract means a separate tract that is created to protect a sensitive area and its buffer, and whose ownership was assigned as provided in KCC 21A.24 prior to January 1, 2005.

Sensitive lake means a designation applied by the County to lakes that are particularly prone to eutrophication from development-induced increases in phosphorus loading. Such lakes are identified on the Water Quality Applications Map adopted with this manual (see map pocket on inside of back cover).

SEPA means State Environmental Policy Act.

Severe building flooding problem means there is flooding of the *finished floor area*[4] of a *habitable building*,[5] or the electrical/heating system of a habitable building for runoff events less than or equal to a 100-year event. Examples include flooding of finished floors of homes and commercial or industrial buildings, or flooding of electrical/heating system components in the crawl space or garage of a home.

Severe erosion problem means there is an open drainage feature with evidence of or potential for erosion/incision sufficient to pose a sedimentation hazard to downstream conveyance systems or pose a landslide hazard by undercutting adjacent slopes. Severe erosion problems do not include roadway shoulder rilling or minor ditch erosion.

Severe flooding problem means a "severe building flooding problem" or a "severe roadway flooding problem." See "severe building flooding problem" and "severe roadway flooding problem."

Severe roadway flooding problem means there is flooding over all lanes of a *roadway*,[6] or a *sole access driveway*[7] is severely impacted, for runoff events less than or equal to the 100-year event. A severely impacted sole access driveway is one in which flooding overtops a culverted section of the driveway, posing a threat of washout or unsafe access conditions due to indiscernible driveway edges, or flooding is deeper than 6 inches on the driveway, posing a severe impediment to emergency access.

Shared facility means a drainage facility designed to meet one or more of the requirements of KCC 9.04.050 for two or more separate projects contained within a basin. Shared facilities usually include shared financial commitments for those drainage facilities.

Sheet erosion means the relatively uniform removal of soil from an area without the development of conspicuous water channels.

Sheet flow means relatively uniform flow over plane surfaces without the concentration of water into conspicuous channels.

Shoreline development means the proposed projects regulated by the Shoreline Management Act. Usually this includes the construction over water or within a shoreline zone (generally 200 feet landward of the water) of structures such as buildings, piers, bulkheads, and breakwaters, including environmental alterations such as dredging and filling, or any project which interferes with public navigational rights on the surface waters.

DRAFT

---

[4] *Finished floor area*, for the purposes of defining ***severe building flooding problem***, means any enclosed area of a building that is designed to be served by the building's permanent heating or cooling system.

[5] *Habitable building* means any residential, commercial, or industrial building that is equipped with a permanent heating or cooling system and an electrical system.

[6] *Roadway*, for the purposes of this definition, means the traveled portion of any public or private road or street classified as such in the *King County Road Standards*.

[7] *Sole access driveway* means there is no other unobstructed, flood-free route for emergency access to a habitable building.

Shredded wood mulch means a mulch made from shredded tree trimmings, usually from trees cleared on site and stockpiled until needed. It must be free of garbage and weeds and may not contain excessive resin, tannin, or other material detrimental to plant growth.

Siltation means the process by which a river, lake, or other water body becomes clogged with sediment. Silt can clog gravel beds and prevent successful survival of salmon eggs.

Single family residential project means any project that (a) constructs or modifies a single family dwelling unit, (b) makes improvements (e.g., driveways, roads, outbuildings, play courts, etc.) or clears native vegetation on a lot that contains or will contain a single family dwelling unit, or (c) is a plat, short plat, or boundary line adjustment that creates or adjusts lots that will contain single family dwelling units.

Site (a.k.a. development site) means a single parcel, or two or more contiguous parcels that are under common ownership or documented legal control, used as a single parcel for purposes of applying for authority from King County to carry out a development/project proposal. For projects located primarily within dedicated rights-of-way, site includes the entire width of right-of-way within the total length of right-of-way subject to improvements proposed by the project.

Site improvement plan means the plan that consists of all the plans, profiles, details, notes and specifications necessary to construct road, drainage structure and off-street parking improvements. See also "modified site improvement plan."

Slope means the gradient in feet (vertical) per feet (horizontal) or expressed as percent. Side slopes of drainage facilities are usually referred to with the horizontal dimension first (as in 3H:1V).

Sloughing means the sliding of overlying material. Sloughing has the same effect as caving, but it usually occurs when the bank or an underlying stratum is saturated or scoured.

Small project drainage plan means a simplified form of site improvement and erosion and sediment control plans (without a technical information report) which can be prepared by a non-engineer from a set of pre-engineered design details. Small project drainage plans are allowed for projects in Small Project Drainage Review.

Small Project Drainage Review means the drainage review for a proposed single family residential project or agricultural project that: .would result in: (a) ten thousand square feet or less of total impervious surface added on or after January 8, 2001; or (b) would result in four percent or less of total impervious surface on a site and limits new pervious surface ~~to less than fifteen percent of the site~~ as specified in the Section 1.1.2.1, and meets the small project drainage requirements specified in Appendix C of the *SWDM*, including flow control best management practices, erosion and sediment control measures, and drainage plan submittal requirements.

Small site ESC plan means a plan and supporting documentation for implementing erosion and sediment control measures that may be prepared by a person who is not a civil engineer for projects that are exempt from drainage review or that are subject to Small Project Drainage Review but disturb less than 3 acres of a site. The plan is a scale drawing of the site or project site that shows the limits of disturbance and how required ESC measures will be applied to prevent sediment from leaving the project site. The plan must include or be accompanied by any diagrams or figures necessary for installation of proposed ESC measures. DDES may allow a written version of this plan if they determine there is no need to illustrate the extent and location of proposed ESC measures.

Soil bioengineering means a method of soil or land stabilization that uses living plant material selected for the specific site situation as the major structural or engineering component of the stabilization.

Soil permeability means the ease with which gases, liquids, or plant roots penetrate or pass through a layer of soil.

Soil scientist means a person who has earned a degree in soil science, agronomy, or hydrogeology from an accredited college or university, or who has equivalent educational training and has at least five years of experience, or who has four years of experience and at least two years of post-graduate study. Two years of experience must be in the State of Washington with local soil types.

Soil stabilization means the use of measures such as rock lining, vegetation, or other engineering structures to prevent the movement of soil when loads are applied to the soil.

DRAFT

Sole access driveway means there is no other unobstructed, flood-free route for emergency access to a habitable building. *Severely impacting* means the flooding overtops a culverted section of the driveway, posing a threat of washout or unsafe access conditions due to indiscernible driveway edges, or the flooding is deeper than 6 inches on the driveway, posing a severe impediment to emergency access.

Sole access roadway means there is no other flood-free route for emergency access to one or more dwelling units.

Sole-source aquifer means an aquifer that is the only source of drinking water for a given community and that is so designated by the U.S. Environmental Protection Agency.

Specific energy means the total energy within any system with respect to the channel bottom; equal to the potential head plus velocity and pressure heads.

Sphagnum bog wetland means an unique wetland having a predominance of sphagnum moss creating a substrate upon which a distinctive community of plants is established. Some of these include *ledum groenlandicum* (Labrador tea), *Kalmia occidentalis* (bog laurel), *Drosera rotundifolia* (sundew), and *Vaccinium oxycoccos* (cranberry). Stunted evergreen trees are also sometimes present. In addition to a distinctive plant community, the water chemistry of a sphagnum wetland is also unique. It is characterized by acidic waters (pH 3 to 5.5), low nutrient content, low alkalinity, and a buffering system composed predominantly of organic acids. In the Puget Sound area, mature sphagnum bog wetlands are typically very old, often dating back thousands of years.

Spill control device means a Tee section or down turned elbow designed to retain a limited volume of pollutant that floats on water, such as oil or antifreeze. Spill control devices are passive and must be followed by clean-up activity for the spilled pollutant to actually be removed.

State Environmental Policy Act (SEPA) means the Washington State law intended to minimize environmental damage. SEPA requires that state agencies and local governments consider environmental factors when making decisions on activities, such as development proposals over a certain size and comprehensive plans. As part of this process, environmental documents are prepared and opportunities for public comment are provided.

Steep slope hazard area means an area on a slope of 40% inclination or more within a vertical elevation change of at least ten feet. For the purpose of this definition, a slope is delineated by establishing its toe and top, and is measured by averaging the inclination over at least ten feet of vertical relief. Also, for the purpose of this definition:

- The *toe* of a slope means a distinct topographic break in slope that separates slopes inclined at less than 40% from slopes inclined at 40% or more. Where no distinct break exists, the toe of a steep slope is the lower most limit of the area where the ground surface drops ten feet or more vertically within a horizontal distance of 25 feet; AND
- The *top* of a slope is a distinct topographic break in slope that separates slopes inclined at less than 40% from slopes inclined at 40% or more. Where no distinct break exists, the top of a steep slope is the uppermost limit of the area where the ground surface drops ten feet or more vertically within a horizontal distance of 25 feet.

Storage routing means a method to account for the attenuation of peak flows passing through a detention facility or other storage feature.

Storm drains means the enclosed conduits that transport surface and storm water runoff toward points of discharge (sometimes called storm sewers).

Storm drain system means the system of gutters, pipes, streams, or ditches used to carry surface and storm water from surrounding lands to streams, lakes, or Puget Sound.

Stormwater means water originating from rainfall and other precipitation that ultimately flows into drainage facilities, rivers, streams, ponds, lakes, and wetlands, or flows from springs and seeps, as well as shallow groundwater. As applied in this manual, it is synonymous with the codified term, "surface and storm water."

Stormwater compliance plan means a plan or study and all regulations and procedures that have been adopted by the county to implement the plan or study, including, but not limited to, capital projects, public education activities, and enforcement programs for managing stormwater quantity and quality discharged from the county's municipal separate

DRAFT

storm sewer system in compliance with the National Pollutant Discharge Elimination System permit program under the Clean Water Act.

Stormwater Pollution Prevention Manual means the manual referenced in KCC 9.12, Water Quality, and adopted in accordance with KCC 2.98, including supporting documentation referenced or incorporated in the manual, describing best management practices and procedures for eliminating or reducing surface, storm, and ground water contamination from existing facilities and existing and new activities not covered by the *Surface Water Design Manual*.

Stormwater pollution prevention and spill (SWPPS) plan means the plan and supporting documentation for implementing pollution and spill prevention BMPs on the project site during construction as required by the *Stormwater Pollution Prevention Manual*. This plan is a component of the construction stormwater pollution prevention plan (CSWPPP), which is submitted with the engineering plans required for drainage review.

Stormwater wetland means a wetland constructed, often in areas of upland soil, for the purpose of treating stormwater. When created in upland soils, stormwater wetlands are not considered waters of the State if they are regularly maintained. In King County, stormwater wetlands cannot currently be used to mitigate for impacts to an existing natural wetland.

Stream means an aquatic area where surface water produces a channel, not including a wholly artificial channel unless it is used by salmonids or used to convey a stream that occurred naturally before construction of the artificial channel. Those topographic features that resemble streams but have no defined channels (e.g., swales) shall be considered streams when hydrologic and hydraulic analyses done pursuant to a development proposal predict formation of a defined channel after development.

Structural engineer means a person licensed by the State of Washington as a professional civil engineer specializing in structural engineering.

Structure means a catch basin or manhole in reference to a storm drainage system or as defined in KCC zoning code 21A.

Stub-out means a length of pipe provided for future connection to the storm drainage system.

Subbasin means a geographic area that (1) drains to a stream or waterbody named and noted on common maps and (2) is contained within the basin of the stream or water body.

Subcritical flow means flow at depths greater than the critical depth.

Supercritical flow means flow at depths less than the critical depth.

Surface and storm water means water originating from rainfall and other precipitation that is found on ground surfaces and in drainage facilities, rivers, streams, springs, seeps, ponds, lakes, wetlands, and shallow groundwater.

Surface and storm water management system means drainage facilities and any other natural features which collect, store, control, treat, and/or convey surface and storm water.

Surface flow means that which travels over land or in an open or piped conveyance system.

Surface Water Design Manual means the manual, and supporting documentation referenced or incorporated in the manual, describing surface and storm water design and analysis requirements, procedures, and guidance that has been formally adopted by rule under the procedures in KCC 2.98. The *Surface Water Design Manual* is available from the King County Department of Development and Environmental Services or the Department of Natural Resources and Parks, Water and Land Resources Division, or their successor agencies.

Swale means a shallow drainage conveyance with relatively gentle side slopes, generally with flow depths less than one foot.

SWDM means *Surface Water Design Manual*.

SWM means the former Surface Water Management Division of the King County Department of Natural Resources and Parks.

DRAFT

Targeted Drainage Review means an abbreviated evaluation required by KCC 9.04.030 for certain types of proposed projects that are not subject to full or large project drainage review. Targeted drainage review may be required for some projects in small project drainage review.

Target impervious surface means that portion of a site's existing, new, and replaced impervious surface from which runoff impacts are required to be mitigated by a particular set of drainage requirements. For the area-specific flow control facility requirement (Section 1.2.3.1), target impervious surface is different for each mapped flow control area. In some flow control areas, replaced impervious surface is required to be mitigated, and in others, it is not. For the area-specific water quality facility requirement (Section 1.2.8.1), target impervious surface is limited to pollution-generating impervious surface. For the flow control BMPs requirement (Section 1.2.3.3), target impervious surface is as specified for each of the three categories of site/lot size and impervious surface coverage set forth in the individual lot BMP requirements of Section 5.2.1. For projects in Small Project Drainage Review, target impervious surface is as specified for each of the two categories of site/lot size set forth in the flow control BMP requirements of Section C.1.3 of detached Appendix C. See the above referenced sections for more specific definitions of target impervious surface to be used with the requirements of these sections.

Target surface means a developed surface from which runoff impacts are required to be mitigated by a particular set of drainage requirements.

Target PGIS means a pollution-generating impervious surface from which runoff impacts to water quality are required to be mitigated by the area-specific water quality facility requirement (see "pollution-generating impervious surface").

Target PGPS means a pollution-generating pervious surface from which runoff impacts to water quality are required to be mitigated by the area-specific water quality facility requirement (see "pollution-generating pervious surface").

Temporary ESC Measures means those erosion and sediment control measures implemented before final stabilization of the site to reduce erosion, control siltation and sedimentation, and prevent the discharge of sediment-laden water from the site.

DRAFT

Threshold discharge area means an onsite area draining to a single natural discharge location, or multiple natural discharge locations that combine within one-quarter-mile downstream (as determined by the shortest flowpath). The examples below illustrate this definition. This term is used to clarify how the thresholds, exemptions, and exceptions of this manual are applied to project sites with multiple discharge points.

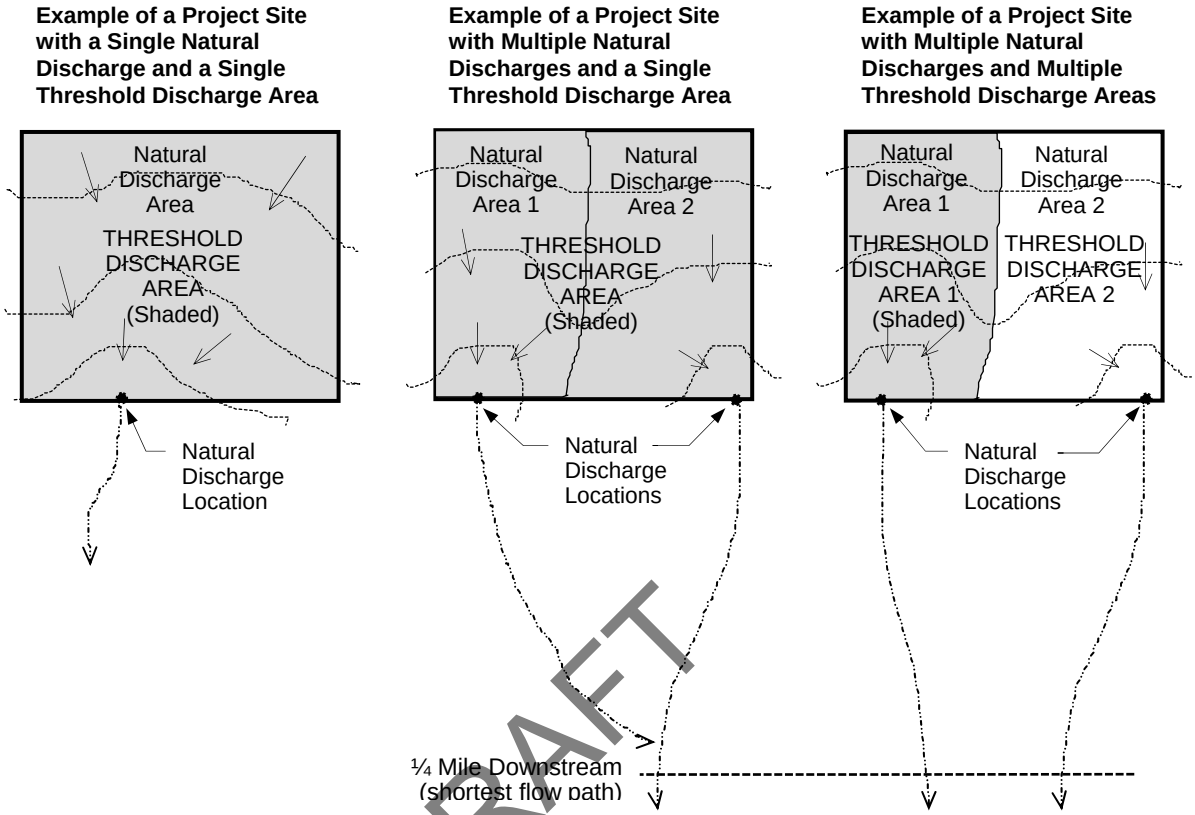

DRAFT

Tightline means a continuous length of pipe that conveys water from one point to another (typically down a steep slope) with no inlets or collection points in between.

Tightline system means a continuous length of pipe used to convey flows down a steep or sensitive slope with appropriate energy dissipation at the discharge end.

Till means a layer of poorly sorted soil deposited by glacial action; in the King County area, till typically has a high silt content (see Section 3.2.2.1 for a description of soil groups).

Time of concentration means the time it takes runoff to travel overland (from the onset of precipitation) from the most hydraulically distant location in the drainage basin to the point of discharge.

Total phosphorous (TP) means a naturally occurring element essential for plant growth. Total phosphorous includes both dissolved and particulate phases of phosphorous. Excess phosphorous can cause excess algae growth in lakes and streams, resulting in aesthetic problems and threats to aquatic life.

Total suspended solids (TSS) means that portion of the solids carried by stormwater that can be caught on a standard glass filter. Additional pollutants such as metals and organics are often associated with the finer portion of the solids.

Toxic means poisonous, carcinogenic, or otherwise directly harmful to life.

Tract means a legally created parcel of property designated for special non-residential and non-commercial uses.

Transportation redevelopment project means a stand-alone transportation improvement project that proposes to add, replace, or modify impervious surface, for purposes other than maintenance, within a length of dedicated public or private road right-of-way that has an existing impervious surface coverage of thirty-five percent or more. Road

right-of-way improvements required as part of a subdivision or commercial development project may not be defined as a separate transportation redevelopment project.

Travel time means the estimated time for surface water to flow between two points of interest.

Treatment train means a combination of two or more treatment facilities connected in series (i.e., the design water volume passes through each facility in turn).

Tributary means a drainage feature that collects water and conveys it to another drainage feature (e.g., a drainage channel is tributary to a stream into which it flows).

Tributary area means the geographical area (not constrained by property boundaries) that drains to the point of concern.

Turbidity means the dispersion or scattering of light in a liquid, caused by suspended solids and other factors: commonly used as a measure of suspended solids in a liquid.

Undisturbed buffer means a zone where development activity, including logging and the construction of utility trenches, roads, and/or surface and storm water drainage facility systems, shall not occur.

Undisturbed low gradient uplands means forested land that is sufficiently large and flat to infiltrate surface and storm runoff without allowing the concentration of water on the surface of the ground.

Urban residential development means proposed plats or short plats in urban residential zoning per KCC 21.A12. These development proposals generally lie within the Urban Growth Area and create small (generally less than 10,000 square foot) lots.

Water quality facility means a drainage facility designed to reduce pollutants once they are already contained in surface and storm water runoff. Water quality (WQ) facilities are a structural component of best management practices (BMPs). When used singly or in combination, WQ facilities reduce the potential for contamination of both surface and ground waters.

Water quality treatment area means a geographic area of the County within which proposed projects must comply with the water quality facility requirements adopted for that area as part of this manual. There are three such areas that comprise unincorporated King County: the Basic WQ Treatment Area, the Sensitive Lake WQ Treatment Area, and the Sphagnum Bog WQ Treatment Area. These areas are mapped on the Water Quality Applications Map adopted with this manual and on the County's Geographic Information System.

DRAFT

Watershed means the geographic region from which water drains toward a central collector such as a stream, river, lake, or salt water.

Wetpool means the volume of water more or less permanently contained in a pond or vault. The volume of water in a wetpool is normally lost only through natural processes such as evaporation, evapotranspiration, or slow infiltration into the ground.

Wetpond and **wetvault** mean drainage facilities for water quality treatment that contain a permanent pool of water. They are designed to optimize water quality by providing long retention times (on the order of a week or more) to settle out particles of fine sediment to which pollutants such as heavy metals adsorb, and to allow biologic activity to occur that metabolizes nutrients and organic pollutants. For wetvaults, the permanent pool of water is covered by a lid which blocks sunlight from entering the facility, limiting light-dependent biologic activity.

Wetland means an area that is not an aquatic area and that is inundated or saturated by ground or surface water at a frequency and duration sufficient to support, and under normal circumstances supports, a prevalence of vegetation typically adapted for life in saturated soil conditions. For purposes of this definition:

- Where the vegetation has been removed or substantially altered, wetland is determined by the presence or evidence of hydric soil, by other documentation such as aerial photographs of the previous existence of wetland vegetation or by any other manner authorized in the wetland delineation manual required by RCW 36.70A.175; and
- Except for artificial features intentionally made for purposes of mitigation, wetland does not include an artificial feature made from a non-wetland area, which may include, but is not limited to a surface water

conveyance for drainage or irrigation; a grass-lined swale; a canal; a flow control facility; a wastewater treatment facility; a farm pond; a wetpond; landscape amenities; or a wetland created after July 1, 1990, that was unintentionally made as a result of construction of a road, street or highway.

Wetland edge means the line delineating the outer edge of a wetland, consistent with the wetland delineation manual required by RCW 36.70A.175.

Wet Season means October 1 to April 30.

WQ means water quality.

Zero-rise floodway means the channel of a stream and that portion of the adjoining floodplain that is necessary to contain and discharge the base flood flow without measurable increase in the base flood elevation. For the purpose of this definition, "measurable increase in base flood elevation" means a calculated upward rise in the base flood elevation, equal to or greater than 0.01 foot, resulting from a comparison of existing conditions and changed conditions directly attributable to alterations of the topography or any other flow obstructions in the floodplain. The "zero rise floodway" is broader than that of the FEMA floodway but always includes the FEMA floodway. The "zero-rise floodway" includes the entire floodplain unless a critical areas report demonstrates otherwise.

Zinc means one of several metals of concern in the aquatic environment, and is used as an indicator of a whole range of metals found in urban runoff.

DRAFT

APPENDICES

KING COUNTY, WASHINGTON
SURFACE WATER DESIGN MANUAL

APPENDIX A
Maintenance Requirements for Flow Control, Conveyance, and WQ Facilities

APPENDIX B
Master Drainage Plan Objective, Criteria and Components, and Review Process

APPENDIX C (detached)
Small Project Drainage Requirements

APPENDIX D (detached)
Erosion and Sediment Control Standards

DRAFT

KING COUNTY, WASHINGTON
SURFACE WATER DESIGN MANUAL

APPENDIX A
MAINTENANCE REQUIREMENTS FOR FLOW CONTROL, CONVEYANCE AND WQ FACILITIES

Section No.	Subject
1	Detention Ponds
2	Infiltration Facilities
3	Detention Tanks and Vaults
4	Control Structure/ Flow Restrictor
5	Catch Basins
6	Debris Barriers
7	Energy Dissipaters
8	Fencing
9	Gates
10	Conveyance Pipes and Ditches
11	Grounds (Landscaping)
12	Access Roads
13	Basic Biofiltration Swale
14	Wet Biofiltration Swale
15	Filter Strip
16	Wetpond
17	Wetvault
18	Sand Filter Pond
19	Sand Filter Vault
20	StormFilter®
21	StormFilter® (Cartridge Type)
22	Baffle Oil/Water Separator
23	Coalescing Plate
24	Catch Basin Insert

DRAFT

APPENDIX A

MAINTENANCE REQUIREMENTS FOR FLOW CONTROL, CONVEYANCE, AND WQ FACILITIES

DRAFT

NO. 1 – DETENTION PONDS

Maintenance Component	Defect or Problem	Conditions When Maintenance Is Needed	Results Expected When Maintenance Is Performed
General	Trash & Debris	Any trash and debris which exceed 1 cubic foot per 1,000 square feet (this is about equal to the amount of trash it would take to fill up one standard size office garbage can). In general, there should be no visual evidence of dumping.	Trash and debris cleared from site.
	Poisonous Vegetation or Noxious Weeds	Any poisonous or nuisance vegetation which may constitute a hazard to County personnel or the public.	No danger of poisonous vegetation where County personnel or the public might normally be. Coordination with Seattle-King County Health Department
	Contaminants and Pollution	Oil, gasoline, or other contaminants ~~of one gallon or more, or any amount~~ found that could: 1) cause damage to plant, animal, or marine life; 2) constitute a fire hazard; or 3) be flushed downstream during rain storms.	No contaminants present other than a surface film. (Coordination with Seattle/King County Health Department)
	Unmowed Grass/Ground Cover	If facility is located in private residential area, mowing is needed when grass exceeds 18 inches in height. In other areas, the general policy is to make the pond site match adjacent ground cover and terrain as long as there is no interference with the function of the facility.	When mowing is needed, grass/ground cover should be mowed to 2 inches in height. Mowing of selected higher use areas rather than the entire slope may be acceptable for some situations.
	Rodent Holes	Any evidence of rodent holes if facility is acting as a dam or berm, or any evidence of water piping through dam or berm via rodent holes or other causes.	Rodents destroyed and dam or berm repaired. (Coordination with Seattle/King County Health Department)
	Insects	When insects such as wasps and hornets interfere with maintenance activities. Mosquito complaints accompanied by presence of high mosquito larvae concentrations (aquatic phase).	Insects destroyed or removed from site. Mosquito control: Swallow nesting boxes or approved larvicide applied.
	Tree Growth	Tree growth threatens integrity of berms acting as dams, does not allow maintenance access, or interferes with maintenance activity (i.e., slope mowing, silt removal, vactoring, or equipment movements). If trees are not a threat to berm integrity or not interfering with access, leave trees alone.	Trees do not hinder maintenance activities. Harvested trees should be recycled into mulch or other beneficial uses (e.g., alders for firewood).

NO. 1 – DETENTION PONDS

Maintenance Component	Defect or Problem	Conditions When Maintenance Is Needed	Results Expected When Maintenance Is Performed
Side Slopes of Pond	Erosion	Eroded damage over 2 inches deep where cause of damage is still present or where there is potential for continued erosion. Any erosion observed on a compacted berm embankment.	Slopes should be stabilized by using appropriate erosion control measure(s); e.g., rock reinforcement, planting of grass, compaction. If erosion is occurring on compacted berms a licensed civil engineer should be consulted to resolve source of erosion.
Storage Area	Sediment	Accumulated sediment that exceeds 10% of the designed pond depth.	Sediment cleaned out to designed pond shape and depth; pond reseeded if necessary to control erosion.
	Liner Damage (If Applicable)	Liner is visible and has more than three ¼-inch holes in it.	Liner repaired or replaced.
Pond Berms (Dikes)	Settlement	Any part of berm that has settled 4 inches lower than the design elevation. Settling can be an indication of more severe problems with the berm or outlet works. A licensed civil engineer should be consulted to determine the source of the settlement.	Dike should be built back to the design elevation.
Emergency Overflow/Spillway and Berms over 4 feet in height.	Tree Growth	Tree growth on emergency spillways create blockage problems and may cause failure of the berm due to uncontrolled overtopping. Tree growth on berms over 4 feet in height may lead to piping through the berm which could lead to failure of the berm.	Trees should be removed. If root system is small (base less than 4 inches) the root system may be left in place. Otherwise the roots should be removed and the berm restored. A licensed civil engineer should be consulted for proper berm/spillway restoration.
Emergency Overflow/Spillway	Rock Missing	Only one layer of rock exists above native soil in area five square feet or larger, or any exposure of native soil at the top of out flow path of spillway. Rip-rap on inside slopes need not be replaced.	Replace rocks to design standards.

DRAFT

NO. 2 – INFILTRATION FACILITIES

Maintenance Component	Defect or Problem	Conditions When Maintenance Is Needed	Results Expected When Maintenance Is Performed
Infiltration Pond General	Trash & Debris	See "Detention Ponds" Table No. 1	See "Detention Ponds" Table No. 1
	Poisonous Vegetation or Noxious Weeds	See "Detention Ponds" Table No. 1	See "Detention Ponds" Table No. 1
	Contaminants and Pollution	See "Detention Ponds" Table No. 1	See "Detention Ponds" Table No. 1
	Unmowed Grass/Ground Cover	See "Detention Ponds" Table No. 1	See "Detention Ponds" Table No. 1
	Rodent Holes	See "Detention Ponds" Table No. 1	See "Detention Ponds" Table No. 1
	Insects	See "Detention Ponds" Table No. 1	See "Detention Ponds" Table No. 1
Infiltration Pond Side Slopes	Erosion	See "Detention Ponds" Table No. 1	See "Detention Ponds" Table No. 1
Infiltration Pond Emergency Overflow Spillway and Berms over 4 feet in height.	Tree Growth	See "Detention Ponds" Table No. 1	See "Detention Ponds" Table No. 1
Infiltration Pond Emergency Overflow Spillway	Rock Missing	See "Detention Ponds" Table No. 1	See "Detention Ponds" Table No. 1
Infiltration Facility Storage Area	Sediment	A percolation test pit (ponds) or test of facility indicates facility is only working at 90% of its designed capabilities. If two inches or more sediment is present, remove.	Sediment is removed and/or facility is cleaned so that infiltration system works according to design. Ponds are reseeded if necessary to control erosion.
Infiltration Facility Rock Filters (If Applicable)	Sediment and Debris	By visual inspection, little or no water flows through filter during heavy rain storms.	Replaced gravel in rock filter.
Infiltration Facility Sump	Sump Filled with Sediment and Debris (If Applicable)	Any sediment and debris filling vault to 10% of depth from sump bottom to bottom of outlet pipe or obstructing flow into the connector pipe.	Clean out sump to design depth.
Infiltration Facility Filter Bags (If Applicable)	Filled with Sediment and Debris	Sediment and debris fill bag more than $^1/_2$ full.	Replaced filter bag or redesign system.
Infiltration Facility Pre-settling Ponds and Vaults	Sediment	Remove when 6" or more.	Sediment cleaned out to designed pond shape and depth or sediment is removed from vault. Ponds are reseeded if necessary to control erosion.

Note: Sediment accumulation of more than 0.25 inches per year may indicate excessive erosion is occurring upstream of the facility or that conveyance systems are not being properly maintained. The contributing drainage area should be checked for erosion problems or inadequate maintenance of conveyance systems if excessive sedimentation is noted in an infiltration facility.

Check twice a year during first 2 years of operation; once a year thereafter. Clean manholes/catch basins, repair damaged inlets/outlets, clean trash racks.

DRAFT

NO. 3 – DETENTION TANKS AND VAULTS

Maintenance Component	Defect or Problem	Conditions When Maintenance is Needed	Results Expected When Maintenance is Performed
Storage Area	Plugged Air Vents	One-half of the cross section of a vent is blocked at any point with debris and sediment.	Vents free of debris and sediment
	Debris and Sediment	Accumulated sediment depth exceeds 10% of the diameter of the storage area for ½ length of storage vault or any point depth exceeds 15% of diameter. Example: 72-inch storage tank would require cleaning when sediment reaches depth of 7 inches for more than ½ length of tank.	All sediment and debris removed from storage area.
	Joints Between Tank/Pipe Section	Any crack allowing material to be transported into facility.	All joint between tank/pipe sections are sealed
	Tank Pipe Bent Out of Shape	Any part of tank/pipe is bent out of shape more than 10% of its design shape.	Tank/pipe repaired or replaced to design.
Vault Structure	Damage to Wall, Frame, Bottom, and/or Top Slab	Cracks wider than ½-inch and any evidence of soil particles entering the structure through the cracks, or maintenance inspection personnel determines that the vault is not structurally sound.	Vault replaced or repaired to design specifications.
	Damaged Pipe Joints	Cracks wider than ½-inch at the joint of any inlet/outlet pipe or any evidence of soil particles entering the vault through the walls.	No cracks more than ¼-inch wide at the joint of the inlet/outlet pipe.
Manhole	Cover Not in Place	Cover is missing or only partially in place. Any open manhole requires maintenance.	Manhole is closed.
	Locking Mechanism Not Working	Mechanism cannot be opened by one maintenance person with proper tools. Bolts into frame have less than ½ inch of thread (may not apply to self-locking lids.)	Mechanism opens with proper tools.
	Cover Difficult to Remove	One maintenance person cannot remove lid after applying 80lbs of lift. Intent is to keep cover from sealing off access to maintenance.	Cover can be removed and reinstalled by one maintenance person.
	Ladder Rungs Unsafe	King County Safety Office and/or maintenance person judges that ladder is unsafe due to missing rungs, misalignment, rust, or cracks.	Ladder meets design standards. Allows maintenance person safe access.
Large access doors/plate	Gaps, Doesn't Cover Completely	Large access doors not flat and/or access hole not completely covered. NOTE however that grated doors are acceptable.	Doors closes flat and covers access hole completely.
	Lifting Rings Missing, Rusted	Lifting rings not capable of lifting weight of door or lid.	Lifting rings sufficient to remove lid.

DRAFT

NO. 4 – CONTROL STRUCTURE/FLOW RESTRICTOR

Maintenance Component	Defect or Problem	Condition When Maintenance is Needed	Results Expected When Maintenance is Performed
General	Trash and Debris (Includes Sediment)	Distance between debris build-up and bottom of orifice plate is less than 1.5 feet.	All trash and debris removed.
	Structural Damage	Structure is not securely attached to manhole wall and outlet pipe structure should support at least 1,000 lbs of up or down pressure.	Structure securely attached to wall and outlet pipe.
		Structure is not in upright position (allow up to 10% from plumb).	Structure in correct position.
		Connections to outlet pipe are not watertight and show signs of rust.	Connections to outlet pipe are water tight; structure repaired or replaced and works as designed.
		Any holes—other than designed holes—in the structure.	Structure has no holes other than designed holes.
Cleanout Gate	Damaged or Missing	Cleanout gate is not watertight or is missing.	Gate is watertight and works as designed.
		Gate cannot be moved up and down by one maintenance person.	Gate moves up and down easily and is watertight.
		Chain/rod leading to gate is missing or damaged.	Chain is in place and works as designed.
		Gate is rusted over 50% of its surface area.	Gate is repaired or replaced to meet design standards.
Orifice Plate	Damaged or Missing	Control device is not working properly due to missing, out of place, or bent orifice plate.	Plate is in place and works as designed.
	Obstructions	Any trash, debris, sediment, or vegetation blocking the plate.	Plate is free of all obstructions and works as designed.
Overflow Pipe	Obstructions	Any trash or debris blocking (or having the potential of blocking) the overflow pipe.	Pipe is free of all obstructions and works as designed.
Manhole	See “Detention Tanks and Vaults”	See “Detention Tanks and Vaults” Table No. 3	See “Detention Tanks and Vaults” Table No. 3

DRAFT

NO. 5 – CATCH BASINS

Maintenance Component	Defect or Problem	Conditions When Maintenance is Needed	Results Expected When Maintenance is performed
General	Trash & Debris (Includes Sediment)	Trash or debris of more than ½ cubic foot which is located immediately in front of the catch basin opening or is blocking capacity of the basin by more than 10%.	No Trash or debris located immediately in front of catch basin opening.
		Trash or debris (in the basin) that exceeds $^1/_3$ the depth from the bottom of basin to invert the lowest pipe into or out of the basin.	No trash or debris in the catch basin.
		Trash or debris in any inlet or outlet pipe blocking more than $^1/_3$ of its height.	Inlet and outlet pipes free of trash or debris.
		Dead animals or vegetation that could generate odors that could cause complaints or dangerous gases (e.g., methane).	No dead animals or vegetation present within the catch basin.
		Deposits of garbage exceeding 1 cubic foot in volume.	No condition present which would attract or support the breeding of insects or rodents.
	Structure Damage to Frame and/or Top Slab	Corner of frame extends more than ¾ inch past curb face into the street (If applicable).	Frame is even with curb.
		Top slab has holes larger than 2 square inches or cracks wider than ¼ inch (intent is to make sure all material is running into basin).	Top slab is free of holes and cracks.
		Frame not sitting flush on top slab, i.e., separation of more than ¾ inch of the frame from the top slab.	Frame is sitting flush on top slab.
	Cracks in Basin Walls/Bottom	Cracks wider than ½ inch and longer than 3 feet, any evidence of soil particles entering catch basin through cracks, or maintenance person judges that structure is unsound.	Basin replaced or repaired to design standards.
		Cracks wider than ½ inch and longer than 1 foot at the joint of any inlet/outlet pipe or any evidence of soil particles entering catch basin through cracks.	No cracks more than $^1/_4$ inch wide at the joint of inlet/outlet pipe.
	Settlement/ Misalignment	Basin has settled more than 1 inch or has rotated more than 2 inches out of alignment.	Basin replaced or repaired to design standards.
	Fire Hazard	Presence of chemicals such as natural gas, oil and gasoline.	No flammable chemicals present.
	Vegetation	Vegetation growing across and blocking more than 10% of the basin opening.	No vegetation blocking opening to basin.
		Vegetation growing in inlet/outlet pipe joints that is more than 6 inches tall and less than 6 inches apart.	No vegetation or root growth present.
	Pollution	Nonflammable chemicals of more than ½ cubic foot per three feet of basin length.	No pollution present other than surface film.
Catch Basin Cover	Cover Not in Place	Cover is missing or only partially in place. Any open catch basin requires maintenance.	Catch basin cover is closed
	Locking Mechanism Not Working	Mechanism cannot be opened by on maintenance person with proper tools. Bolts into frame have less than ½ inch of thread.	Mechanism opens with proper tools.
	Cover Difficult to Remove	One maintenance person cannot remove lid after applying 80 lbs. of lift; intent is keep cover from sealing off access to maintenance.	Cover can be removed by one maintenance person.
Ladder	Ladder Rungs Unsafe	Ladder is unsafe due to missing rungs, misalignment, rust, cracks, or sharp edges.	Ladder meets design standards and allows maintenance person safe access.

DRAFT

NO. 5 – CATCH BASINS

Maintenance Component	Defect or Problem	Conditions When Maintenance is Needed	Results Expected When Maintenance is performed
Metal Grates (If Applicable)	Unsafe Grate Opening	Grate with opening wider than $^{7}/_{8}$ inch.	Grate opening meets design standards.
	Trash and Debris	Trash and debris that is blocking more than 20% of grate surface.	Grate free of trash and debris.
	Damaged or Missing.	Grate missing or broken member(s) of the grate.	Grate is in place and meets design standards.

NO. 6 – DEBRIS BARRIERS (E.G., TRASH RACKS)

Maintenance Component	Defect or Problem	Condition When Maintenance is Needed	Results Expected When Maintenance is Performed.
General	Trash and Debris	Trash or debris that is plugging more than 20% of the openings in the barrier.	Barrier clear to receive capacity flow.
Metal	Damaged/Missing Bars.	Bars are bent out of shape more than 3 inches.	Bars in place with no bends more than ¾ inch.
		Bars are missing or entire barrier missing.	Bars in place according to design.
		Bars are loose and rust is causing 50% deterioration to any part of barrier.	Repair or replace barrier to design standards.

DRAFT

NO. 7 – ENERGY DISSIPATERS

Maintenance Component	Defect or Problem	Conditions When Maintenance is Needed	Results Expected When Maintenance is Performed.
External:			
Rock Pad	Missing or Moved Rock	Only one layer of rock exists above native soil in area five square feet or larger, or any exposure of native soil.	Replace rocks to design standards.
Dispersion Trench	Pipe Plugged with Sediment	Accumulated sediment that exceeds 20% of the design depth.	Pipe cleaned/flushed so that it matches design.
	Not Discharging Water Properly	Visual evidence of water discharging at concentrated points along trench (normal condition is a “sheet flow” of water along trench). Intent is to prevent erosion damage.	Trench must be redesigned or rebuilt to standards.
	Perforations Plugged.	Over ½ of perforations in pipe are plugged with debris and sediment.	Clean or replace perforated pipe.
	Water Flows Out Top of “Distributor” Catch Basin.	Maintenance person observes water flowing out during any storm less than the design storm or its causing or appears likely to cause damage.	Facility must be rebuilt or redesigned to standards.
	Receiving Area Over-Saturated	Water in receiving area is causing or has potential of causing landslide problems.	No danger of landslides.
Internal:			
Manhole/Chamber	Worn or Damaged Post. Baffles, Side of Chamber	Structure dissipating flow deteriorates to ½ or original size or any concentrated worn spot exceeding one square foot which would make structure unsound.	Replace structure to design standards.

NO. 8 – FENCING

Maintenance Component	Defect or Problem	Conditions When Maintenance is Needed	Results Expected When Maintenance is Performed
General	Missing or Broken Parts	Any defect in the fence that permits easy entry to a facility.	Parts in place to provide adequate security.
	Erosion	Erosion more than 4 inches high and 12-18 inches wide permitting an opening under a fence.	No opening under the fence that exceeds 4 inches in height.
Wire Fences	Damaged Parts	Post out of plumb more than 6 inches.	Post plumb to within 1½ inches.
		Top rails bent more than 6 inches.	Top rail free of bends greater than 1 inch.
		Any part of fence (including post, top rails, and fabric) more than 1 foot out of design alignment.	Fence is aligned and meets design standards.
		Missing or loose tension wire.	Tension wire in place and holding fabric.
		Missing or loose barbed wire that is sagging more than 2½ inches between posts.	Barbed wire in place with less than ¾ inch sag between post.
		Extension arm missing, broken, or bent out of shape more than 1½ inches.	Extension arm in place with no bends larger than ¾ inch.
	Deteriorated Paint or Protective Coating	Part or parts that have a rusting or scaling condition that has affected structural adequacy.	Structurally adequate posts or parts with a uniform protective coating.
	Openings in Fabric	Openings in fabric are such that an 8-inch diameter ball could fit through.	No openings in fabric.

DRAFT

NO. 9 – GATES

Maintenance Component	Defect or Problem	Conditions When Maintenance is Needed	Results Expected When Maintenance is Performed
General	Damaged or Missing Members	Missing gate or locking devices.	Gates and Locking devices in place.
		Broken or missing hinges such that gate cannot be easily opened and closed by a maintenance person.	Hinges intact and lubed. Gate is working freely.
		Gate is out of plumb more than 6 inches and more than 1 foot out of design alignment.	Gate is aligned and vertical.
		Missing stretcher bar, stretcher bands, and ties.	Stretcher bar, bands, and ties in place.
	Openings in Fabric	See “Fencing” Table No. 8	See “Fencing” Table No. 8

NO. 10 – CONVEYANCE PIPES AND DITCHES

Maintenance Component	Defect or Problem	Conditions When Maintenance is Needed	Results Expected When Maintenance is Performed
Pipes	Sediment & Debris	Accumulated sediment that exceeds 20% of the diameter of the pipe.	Pipe cleaned of all sediment and debris.
	Vegetation	Vegetation that reduces free movement of water through pipes.	All vegetation removed so water flows freely through pipes.
	Damaged	Protective coating is damaged; rust is causing more than 50% deterioration to any part of pipe.	Pipe repaired or replaced.
		Any dent that decreases the cross section area of pipe by more than 20%.	Pipe repaired or replaced.
Open Ditches	Trash & Debris	Trash and debris exceeds 1 cubic foot per 1,000 square feet of ditch and slopes.	Trash and debris cleared from ditches.
	Sediment	Accumulated sediment that exceeds 20% of the design depth.	Ditch cleaned/flushed of all sediment and debris so that it matches design.
	Vegetation	Vegetation that reduces free movement of water through ditches.	Water flows freely through ditches.
	Erosion Damage to Slopes	See “Detention Ponds” Table No. 1	See “Detention Ponds” Table No. 1
	Rock Lining Out of Place or Missing (If Applicable).	Maintenance person can see native soil beneath the rock lining.	Replace rocks to design standards.

DRAFT

NO. 11 – GROUNDS (LANDSCAPING)

Maintenance Component	Defect or Problem	Conditions When Maintenance is Needed	Results Expected When Maintenance is Performed
General	Weeds (Nonpoisonous, not noxious)	Weeds growing in more than 20% of the landscaped area (trees and shrubs only).	Weeds present in less than 5% of the landscaped area.
	Safety Hazard	Any presence of poison ivy or other poisonous vegetation.	No poisonous vegetation present in landscaped area.
	Trash or Litter	Paper, cans, bottles, totaling more than 1 cubic foot within a landscaped area (trees and shrubs only) of 1,000 square feet.	Area clear of litter.
Trees and Shrubs	Damaged	Limbs or parts of trees or shrubs that are split or broken which affect more than 25% of the total foliage of the tree or shrub.	Trees and shrubs with less than 5% of total foliage with split or broken limbs.
		Trees or shrubs that have been blown down or knocked over.	Tree or shrub in place free of injury.
		Trees or shrubs which are not adequately supported or are leaning over, causing exposure of the roots.	Tree or shrub in place and adequately supported; remove any dead or diseased trees.

NO. 12 – ACCESS ROADS

Maintenance Component	Defect or Problem	Condition When Maintenance is Needed	Results Expected When Maintenance is Performed
General	Trash and Debris	Trash and debris exceeds 1 cubic foot per 1,000 square feet (i.e., trash and debris would fill up one standards size garbage can).	Roadway free of debris which could damage tires.
	Blocked Roadway	Debris which could damage vehicle tires (glass or metal).	Roadway free of debris which could damage tires.
		Any obstruction which reduces clearance above road surface to less than 14 feet.	Roadway overhead clear to 14 feet high.
		Any obstruction restricting the access to a 10- to 12-foot width for a distance of more than 12 feet or any point restricting access to less than a 10-foot width.	Obstruction removed to allow at least a 12-foot access.
Road Surface	Settlement, Potholes, Mush Spots, Ruts	When any surface defect exceeds 6 inches in depth and 6 square feet in area. In general, any surface defect which hinders or prevents maintenance access.	Road surface uniformly smooth with no evidence of settlement, potholes, mush spots, or ruts.
	Vegetation in Road Surface	Weeds growing in the road surface that are more than 6 inches tall and less than 6 inches tall and less than 6 inches apart within a 400-square foot area.	Road surface free of weeds taller than 2 inches.
	Modular Grid Pavement	Build-up of sediment mildly contaminated with petroleum hydrocarbons.	Removal of sediment and disposal in keeping with Health Department recommendations for mildly contaminated soils or catch basin sediments.
Shoulders and Ditches	Erosion Damage	Erosion within 1 foot of the roadway more than 8 inches wide and 6 inches deep.	Shoulder free of erosion and matching the surrounding road.
	Weeds and Brush	Weeds and brush exceed 18 inches in height or hinder maintenance access.	Weeds and brush cut to 2 inches in height or cleared in such a way as to allow maintenance access.

DRAFT

NO. 13 – BASIC BIOFILTRATION SWALE

Maintenance Component	Defect or Problem	Condition When Maintenance is Needed	Recommended Maintenance to Correct Problem
Swale Section	Sediment Accumulation on Grass	Sediment depth exceeds 2 inches	Remove sediment deposits on grass treatment area of the bioswale. When finished, swale should be level from side to side and drain freely toward outlet. There should be no areas of standing water once inflow has ceased.
	Standing Water	When water stands in the swale between storms and does not drain freely.	Any of the following may apply: remove sediment or trash blockages, improve grade from head to foot of swale, remove clogged check dams, add underdrains or convert to a wet biofiltration swale.
	Constant Baseflow	When small quantities of water continually flow through the swale, even when it has been dry for weeks, and an eroded, muddy channel has formed in the swale bottom.	Add a low-flow pea-gravel drain the length of the swale or bypass the baseflow around the swale.
	Poor Vegetation Coverage	When grass is sparse or bare or eroded patches occur in more than 10% of the swale bottom.	Determine why grass growth is poor and correct that condition. Re-plant with plugs of grass from the upper slope: plant in the swale bottom at 8-inch intervals, or re-seed into loosened, fertile soil.
	Defective Vegetation	When the grass becomes excessively tall (greater than 10 inches) or when nuisance weeds and other vegetation starts to take over.	Mow vegetation or remove nuisance vegetation so that flow not impeded. Grass should be mowed to a height of 3 to 4 inches. Remove grass clippings.
	Excessive Shading	Grass growth is poor because sunlight does not reach swale.	If possible, trim back over-hanging limbs, remove brushy vegetation on adjacent slopes.
	Trash and Debris Accumulation	Trash and debris accumulated in the bioswale.	Remove trash and debris from bioswale.
	Erosion/Scouring	Eroded or scoured swale bottom due to flow channelization, or higher flows.	For ruts or bare areas less than 12 inches wide, repair the damaged area by filling with crushed gravel. The grass will creep in over the rock in time. If bare areas are large, generally greater than 12 inches wide, the swale should be re-graded and re-seeded. For smaller bare areas, overseed when bare spots are evident, or take plugs of grass from the upper slope and plant in the swale bottom at 8-inch intervals.
Inlet/Outlet	Sediment and Debris	Inlet/outlet areas clogged with sediment and/or debris.	Remove material so that there is no clogging or blockage in the inlet and outlet area.
Flow Spreader	Concentrated Flow	Flow spreader uneven or clogged so that flows are not uniformly distributed through entire swale width.	Level the spreader and clean so that flows are spread evenly over entire swale width.

DRAFT

NO. 14 – WET BIOFILTRATION SWALE

Maintenance Component	Defect or Problem	Condition When Maintenance is Needed	Recommended Maintenance to Correct Problem
Swale Section	Sediment Accumulation	Sediment depth exceeds 2 inches in 10% of the swale treatment area.	Remove sediment deposits in treatment area.
	Water Depth	Water not retained to a depth of about 4 inches during the wet season.	Build up or repair outlet berm so that water is retained in the wet swale.
	Defective Wetland Vegetation	Vegetation becomes sparse and does not provide adequate filtration, OR vegetation is crowded out by very dense clumps of cattail which do not allow water to flow through the clumps.	Determine cause of lack of vigor of vegetation and correct. Replant as needed. For excessive cattail growth, cut cattail shoots back and compost offsite. *Note: normally wetland vegetation does not need to be harvested unless die-back is causing oxygen depletion in downstream waters.*
	Trash and Debris Accumulation	Trash and debris accumulated in the wet swale.	Remove trash and debris from wet swale.
	Erosion/Scouring	Swale has eroded or scoured due to flow channelization, or higher flows.	Check design flows to assure swale is large enough to handle flows. Bypass excess flows or enlarge swale. Replant eroded areas with fibrous-rooted plants such as *Juncus effusus* (soft rush) in wet areas or snowberry (*Symphoricarpos albus*) in dryer areas.
Inlet/Outlet	Sediment and Debris	Inlet/outlet area clogged with sediment and/or debris.	Remove clogging or blockage in the inlet and outlet areas.

DRAFT

NO. 15 – FILTER STRIP

Maintenance Component	Defect or Problem	Condition When Maintenance is Needed	Recommended Maintenance to Correct Problem
Grass Strip	Sediment Accumulation on Grass	Sediment depth exceeds 2 inches.	Remove sediment deposits, re-level so slope is even and flows pass evenly through strip.
	Defective Vegetation	When the grass becomes excessively tall (greater than 10 inches) or when nuisance weeds and other vegetation starts to take over.	Mow grass, control nuisance vegetation such that flow not impeded. Grass should be mowed to a height between 3-4 inches.
	Trash and Debris Accumulation	Trash and debris accumulated on the filter strip.	Remove trash and debris from filter.
	Erosion/Scouring	Eroded or scoured areas due to flow channelization, or higher flows.	For ruts or bare areas less than 12 inches wide, repair the damaged area by filling with crushed gravel. The grass will creep in over the rock in time. If bare areas are large, generally greater than 12 inches wide, the filter strip should be re-graded and re-seeded. For smaller bare areas, overseed when bare spots are evident.
Flow Spreader	Concentrated Flow	Flow spreader uneven or clogged so that flows are not uniformly distributed through entire filter width.	Level the spreader and clean so that flows are spread evenly over entire filter width.

NO. 16 – WETPOND

Maintenance Component	Defect or Problem	Condition When Maintenance is Needed	Recommended Maintenance to Correct Problem
Pond Area	Water Level	First cell empty, doesn't hold water.	Line the first cell to maintain at least 4 feet of water. Although the second cell may drain, the first cell must remain full to control turbulence of the incoming flow and reduce sediment resuspension.
	Defective Vegetation	Vegetation such as grass and weeds need to be mowed when it starts to impede aesthetics of pond. Mowing is generally required when height exceeds 18 inches. Mowed vegetation should be removed from areas where it could enter the pond, either when the pond level rises, or by rainfall runoff.	Vegetation should be mowed to 4 to 5 inches in height. Trees and bushes should be removed where they are interfering with pond maintenance activities; that is, at the inlet, outlet and near engineered structures.
	Algae Mats	When algae mats develop over more than 10% of the water surface, they should be removed. Also remove mats in the late summer before fall rains, especially in Sensitive Lake Protection Areas. Excessive algae mats interfere with dissolved oxygen content in the water and pose a threat to downstream lakes if excess nutrients are released.	Algae mats that cover more than 10% of the surface of any cell should be removed. A rake or mechanical device should be used to remove the algae. Removed algae can be left to dry on the pond slope above the 100-year water surface.
	Trash and Debris	Accumulation that exceeds 1 cubic foot per 1000 square foot of pond area.	Trash and debris removed from pond.
	Sediment Accumulation	Sediment accumulations in pond bottom that exceeds the depth of sediment zone plus 6 inches, usually in the first cell.	Removal of sediment from pond bottom.
	Oil Sheen on Water	Prevalent and visible oil sheen.	Remove oil from water by use of oil-absorbent pads or by vactor truck. Refer problem to locate source and correct. If chronic low levels of oil persist, plant wetland plants such as *Juncus effusus* (soft rush) which can uptake small concentrations of oil.
	Erosion	Erosion of the pond's side slopes and/or scouring of the pond bottom, that exceeds 6 inches, or where continued erosion is prevalent.	Slopes should be stabilized by using proper erosion control measures, and repair methods.
Pond Dike/Berm	Settlement	Any part of these components that has settled 4 inches or lower than the design elevation, or inspector determines dike/berm is unsound.	Dike/berm is repaired to specifications.
Internal Berm	Concentrated Flow	Berm dividing cells should be level.	Build up low areas of berm or lower high areas so that the berm surface is level and water flows evenly over the entire length of the berm from the first cell to the second.
Inlet/Outlet Pipe	Sediment and Debris	Inlet/Outlet pipe clogged with sediment and/or debris material.	No clogging or blockage in the inlet and outlet piping.
Overflow Spillway	Rock Missing	Rock is missing and soil is exposed at top of spillway or outside slope.	Replace rocks to specifications.

DRAFT

NO. 17 – WETVAULT

Maintenance Component	Defect or Problem	Condition When Maintenance is Needed	Recommended Maintenance to Correct Problem
Vault Area	Trash/Debris Accumulation	Trash and debris accumulated in vault (includes floatables and non-floatables).	Remove trash and debris.
	Sediment Accumulation	Sediment accumulation in vault bottom exceeds the depth of the sediment zone plus 6 inches.	Remove sediment from vault.
	Ventilation	Ventilation area blocked or plugged	Remove or clear blocking material from ventilation area. A specified % of the vault surface area must provide ventilation to the vault interior (see p. 6-82 for required %).
Vault Structure	Damage to Wall, Frame, Bottom, and/or Top Slab	Cracks wider than ½-inch and any evidence of soil particles entering the structure through the cracks, or maintenance inspection personnel determines that the vault is not structurally sound.	Vault replaced or repaired to design specifications.
	Damaged Pipe Joints	Cracks wider than ½-inch at the joint of any inlet/outlet pipe or any evidence of soil particles entering the vault through the walls.	No cracks more than ¼-inch wide at the joint of the inlet/outlet pipe.
Baffles	Damaged/Defective	Baffles corroding, cracking, warping and/or showing signs of failure as determined by maintenance/inspection staff.	Repair or replace baffles to specifications.
Inlet/Outlet	Damaged Pipes	Inlet/outlet piping damaged or broken and in need of repair.	Pipe repaired and/or replaced.
	Trash/Debris Accumulation	Trash and debris accumulated in pipe or inlet/outlet (includes floatables and non-floatables).	Remove trash and debris.
Access Cover	Damaged/Not Working	Cover cannot be opened or removed, especially by one person.	Pipe repaired or replaced to proper working specifications.
Access Ladder	Damaged	Ladder is corroded or deteriorated, not functioning properly, missing rungs, has cracks and/or misaligned. Confined space warning sign missing.	Ladder replaced or repaired to specifications, and is safe to use as determined by inspection personnel. Replace sign warning of confined space entry requirements.

DRAFT

NO. 18 – SAND FILTER POND

Maintenance Component	Defect or Problem	Condition When Maintenance is Needed	Recommended Maintenance to Correct Problem
Pond Area	Sediment Accumulation on top layer	Sediment depth exceeds ½-inch.	No sediment deposit on grass layer of sand filter that would impede permeability of the filter section.
	Trash and Debris Accumulation	Trash and debris accumulated on sand filter bed.	Trash and debris removed from sand filter bed.
	Defective Vegetation (*Note: grass is optional*)	When the grass becomes excessively tall (greater than 6 inches) or when nuisance weeds and other vegetation starts to take over.	Mow vegetation and/or remove nuisance vegetation.
	Erosion Damage to Slopes	Erosion over 2 inches deep where cause of damage is prevalent or potential for continued erosion is evident.	Slopes should be stabilized by using proper erosion control measures.
Clean-Outs	Sediment/Debris	When the clean-outs become full or partially plugged with sediment and/or debris.	Sediment removed from the clean-outs.
Sand Filter Media	Plugging	Drawdown of water through the sand filter media, takes longer than 24 hours, and/or flow through the overflow pipes occurs frequently.	Usually requires scraping of top several inches of sand. May occasionally require replacement of entire sand filter depth, depending on extent of plugging. A sieve analysis is helpful to determine if the lower sand has too high a proportion of fine material.
	Prolonged flows	Sand is saturated for prolonged periods of time (several weeks) and does not dry out between storms due to continuous base flow or prolonged flows from detention facilities.	Limit the low, continuous flows to a small portion of the facility by using a low wooden divider or slightly depressed sand surface.
	Short Circuiting	When flows become concentrated over one section of the sand filter rather than dispersed.	Flow and percolation of water through the sand filter is uniform and dispersed across the entire filter area.
Rock Pad	Missing or Out of Place	Soil beneath the rock is visible.	Replace or rebuild the rock pad to design specifications.
Flow spreader	Concentrated Flow	Flow spreader uneven or clogged so that flows are not uniformly distributed across sand filter.	Level the spreader and clean so that flows are spread evenly over sand filter.
Pipes	Damaged	Any part of the piping that is crushed or deformed more than 20% or any other failure to the piping.	Pipe repaired or replaced.

DRAFT

NO. 19 – SAND FILTER VAULT

Maintenance Component	Defect or Problem	Condition When Maintenance is Needed	Recommended Maintenance to Correct Problem
Sand Media Section	Sediment Accumulation	Sediment depth exceeds ½-inch.	Remove sediment deposits on sand filter section, which would impede permeability of the filter section.
	Trash/Debris Accumulation	Trash and debris accumulated in vault, or pipe inlet/outlet (floatables and non-floatables)	Trash and debris removed from vault, and inlet/outlet piping.
	Short Circuiting	When seepage/flow occurs along the vault walls and corners. Sand eroding near inflow area.	Sand filter media section re-laid and compacted along perimeter of vault to form a semi-seal. Add erosion protection to dissipate force of incoming flow and curtail erosion.
Pre-Settling Section	Sediment Accumulation	Sediment accumulation in vault bottom exceeds the depth of the sediment zone plus 6 inches.	Remove sediment deposit in the first chamber of the vault.
Drain Pipes/Cleanouts	Sediment Accumulation	When drain pipes, cleanouts become full with sediment and/or debris.	Remove the material from the facilities.
Inlet/Outlet Pipes	Trash/Debris Accumulation	Trash and debris accumulated in inlet/outlet pipes (floatables and non-floatables)	Trash and debris removed from vault, and inlet/outlet piping.
	Damaged	Inlet or outlet piping damaged or broken and in need of repair.	Pipe repaired and/or replaced.
Vault Structure	Damaged to Walls, Frame, Bottom and/or Top Slab.	Cracks wider than ½-inch and any evidence of soil particles entering the structure through the cracks, or maintenance/inspection personnel determines that the vault is not structurally sound.	Vault replaced or repaired to design specifications.
	Damaged Pipe Joints	Cracks wider than ½-inch at the joints of any inlet/outlet pipe or any evidence of soil particles entering the vault through the walls.	No cracks more than ¼-inch wide at the joint of the inlet/outlet pipe.
	Ventilation	Ventilation area blocked or plugged	Remove or clear blocking material from ventilation area. A specified % of the vault surface area must provide ventilation to the vault interior (see p. 6-122 for required %).
Baffles/Internal Walls	Damaged	Baffles or walls corroding, cracking, warping and/or showing signs of failure as determined by maintenance/inspection person.	Repair or replace baffles or walls to specifications.
Access Cover	Damaged/Not Working	Cover cannot be opened, corrosion/deformation of cover.	Cover repaired to proper working specifications or replaced.
Access Ladder	Damaged	Ladder is corroded or deteriorated, not functioning properly, missing rungs, cracks, and misaligned.	Ladder replaced or repaired to specifications, and is safe to use as determined by inspection personnel.

DRAFT

NO. 20 – STORMFILTER®

Maintenance Component	Defect or Problem	Condition When Maintenance is Needed	Recommended Maintenance to Correct Problem
Media Section	Sediment Accumulation on Media.	Sediment depth exceeds 0.25 inches.	No sediment deposits that would impede permeability of the compost media.
	Trash/Debris Accumulation	Trash and debris accumulated on compost filter bed.	Trash and debris removed from the compost filter bed.
First Chamber	Sediment Accumulation	Sediment depth exceeds 6 inches in first chamber.	No sediment deposits in vault bottom of first chamber.
Drain Pipes Clean-Outs	Sediment Accumulation	When drain pipes, clean-outs, become full with sediment and/or debris.	Remove the accumulated material from the facilities.

NO. 21 – STORMFILTER® (CARTRIDGE TYPE)

Maintenance Component	Defect or Problem	Condition When Maintenance is Needed	Recommended Maintenance to Correct Problem
Compost Media	Plugged	Drawdown of water through the media takes longer than 1 hour, and/or overflow occurs frequently.	Replace media cartridges.
	Short Circuiting	Flows do not properly enter filter cartridges.	Replace filter cartridges.
Pipes	Damaged	Any part of the pipes that are crushed, damaged due to corrosion and/or settlement.	Pipe repaired and/or replaced.
Access Cover	Damaged/Not Working	Cover cannot be opened, one person cannot open the cover, corrosion/deformation of cover.	Cover repaired to proper working specifications or replaced.
Vault Structure	Damage to Wall, Frame, Bottom, and/or Top Slab	Cracks wider than ½-inch and any evidence of soil particles entering the structure through the cracks, or maintenance/inspection personnel determines that the vault is not structurally sound.	Vault replaced or repaired to design specifications.
	Damaged Pipe Joints	Cracks wider than ½-inch at the joint of any inlet/outlet pipe or any evidence of soil particles entering the vault through the walls.	No cracks more than ¼-inch wide at the joint of the inlet/outlet pipe.
Baffles	Damaged	Baffles corroding, cracking warping, and/or showing signs of failure as determined by maintenance/inspection person.	Repair or replace baffles to specification.
Access Ladder	Damaged	Ladder is corroded or deteriorated, not functioning properly, missing rungs, cracks, and misaligned.	Ladder replaced or repaired and meets specifications, and is safe to use as determined by inspection personnel.

DRAFT

NO. 22 – BAFFLE OIL/WATER SEPARATOR

Maintenance Component	Defect	Condition When Maintenance is Needed	Results Expected When Maintenance is Performed.
Vault Area	Monitoring	Inspection of discharge water for obvious signs of poor water quality.	Effluent discharge from vault should be clear with out thick visible sheen.
	Sediment Accumulation	Sediment depth in bottom of vault exceeds 6 inches in depth.	No sediment deposits on vault bottom which would impede flow through the vault and separation efficiency.
	Trash and Debris Accumulation	Trash and debris accumulation in vault (floatables and non-floatables).	Trash and debris removed from vault, and inlet/outlet piping.
	Oil Accumulation	Oil accumulations that exceed 1 inch, at the surface of the water	Extract oil from vault by vactoring. Disposal in accordance with state and local rules and regulations.
Vault Structure	Damage to Wall, Frame, Bottom, and/or Top Slab	Cracks wider than ½-inch or evidence of soil particles entering the structure through the cracks, or maintenance/inspection personnel determines that the vault is not structurally sound.	Vault replaced or repaired to design specifications.
	Damaged Pipe Joints	Cracks wider than ½-inch at the joint of any inlet/outlet pipe or any evidence of soil particles entering the vault through the walls.	No cracks more than ¼-inch wide at the joint of the inlet/outlet pipe.
Baffles	Damaged	Baffles corroding, cracking, warping and/or showing signs of failure as determined by maintenance/inspection person.	Repair or replace baffles to specifications.
Inlet/Outlet Pipes	Trash and Debris Accumulation	Trash and debris accumulation in inlet/outlet (floatables and non-floatables).	Trash and debris removed from vault, and inlet/outlet piping.
	Damaged Pipes	Inlet or outlet piping damaged or broken and in need of repair.	Pipe repaired or replaced.
Access Cover	Damaged/Not Working	Cover cannot be opened. Corrosion/deformation of cover.	Cover repaired to proper working specifications or replaced.
Access Ladder	Damaged	Ladder is corroded or deteriorated, not functioning properly, missing rungs, cracks, and misaligned.	Ladder replaced or repaired and meets specifications, and is safe to use as determined by inspection personnel.

DRAFT

NO. 23 – COALESCING PLATE OIL/WATER SEPARATOR

Maintenance Component	Defect	Condition When Maintenance is Needed	Results Expected When Maintenance is Performed
Vault Area	Monitoring	Inspection of discharge water for obvious signs of poor water quality.	Effluent discharge from vault should be clear with no thick visible sheen.
	Sediment Accumulation	Sediment depth in bottom of vault exceeds 6 inches in depth and/or visible signs of sediment on plates.	No sediment deposits on vault bottom and plate media, which would impede flow through the vault and separation efficiency.
	Trash and Debris Accumulation	Trash and debris accumulated in vault, or pipe inlet/outlet, floatables and non-floatables.	Trash and debris removed from vault, and inlet/outlet piping.
	Oil Accumulation	Oil accumulation that exceeds 1 inch at the water surface.	Extract oil from vault by vactoring methods. Clean coalescing plates by thoroughly rinsing and flushing. Should be no visible oil depth on water.
Coalescing Plates	Damaged	Plate media broken, deformed, cracked and/or showing signs of failure.	Replace that portion of media pack or entire plate pack depending on severity of failure.
Vault Structure	Damage to Wall, Frame, Bottom, and/or Top Slab	Cracks wider than ½-inch and any evidence of soil particles entering the structure through the cracks, or maintenance inspection personnel determines that the vault is not structurally sound.	Vault replaced or repaired to design specifications.
	Damaged Pipe Joints	Cracks wider than ½-inch at the joint of any inlet/outlet pipe or any evidence of soil particles entering the vault through the walls.	No cracks more than ¼-inch wide at the joint of the inlet/outlet pipe.
Baffles	Damaged	Baffles corroding, cracking, warping and/or showing signs of failure as determined by maintenance/inspection person.	Repair or replace baffles to specifications.
Inlet/Outlet Pipes	Trash and Debris Accumulation	Trash and debris accumulation in inlet/outlet (floatables and non-floatables).	Trash and debris removed from vault, and inlet/outlet piping.
	Damaged Pipes	Inlet or outlet piping damaged or broken and in need of repair.	Pipe repaired or replaced.
Access Cover	Damaged/Not Working	Cover cannot be opened. Corrosion/deformation of cover.	Cover repaired to proper working specifications or replaced.
Access Ladder	Damaged	Ladder is corroded or deteriorated, not functioning properly, missing rungs, cracks, and misaligned.	Ladder replaced or repaired and meets specifications, and is safe to use as determined by inspection personnel.

DRAFT

NO. 24 – CATCHBASIN INSERT

Maintenance Component	Defect or Problem	Conditions When Maintenance is Needed	Results Expected When Maintenance is Performed
Catch Basin	Inspection	Inspection of media insert is required.	Effluent water from media insert is free of oils and has no visible sheen.
	Sediment Accumulation	When sediment forms a cap over the insert media of the insert and/or unit.	No sediment cap on the insert media and its unit.
	Trash and Debris Accumulation	Trash and debris accumulates on insert unit creating a blockage/restriction.	Trash and debris removed from insert unit. Runoff freely flows into catch basin.
Media Insert	Visible Oil	Visible oil sheen passing through media	Remove and replace media inset
	Water Saturated	Catch basin insert is saturated with water, which no longer has the capacity to absorb.	Remove and replace media insert
	Oil Saturated	Media oil saturated due to petroleum spill that drains into catch basin.	Remove and replace media insert.
	Service Life Exceeded	Regular interval replacement due to typical average life of media insert product.	Remove and replace media at regular intervals, depending on insert product.

DRAFT

KING COUNTY, WASHINGTON
SURFACE WATER DESIGN MANUAL

APPENDIX B

MASTER DRAINAGE PLAN OBJECTIVE, CRITERIA AND COMPONENTS, AND REVIEW PROCESS

DRAFT

APPENDIX B

MASTER DRAINAGE PLAN OBJECTIVE, CRITERIA AND COMPONENTS, AND REVIEW PROCESS

DRAFT

Objective

The objective of the Master Drainage Plan (MDP) is to propose specific drainage control systems that will prevent significant adverse impacts to the site's natural hydrologic system and to existing and planned off-site drainage systems and resources. Although this is also the objective of the Surface Water Design Manual (SWDM) generally, the County allows smaller-scale projects to rely more heavily on the "cookbook" approach of the Core and Special Requirements specified in the Manual. Land use alterations from larger scale projects have a higher potential to result in resource and flooding impacts if the "cookbook" standards miss their mark. These larger project, then, are required to take a more detailed, site-specific look at drainage resources and associated management issues.

Larger projects are seen to entail more risk to receiving waters (including groundwater) for two reasons: (a) the relatively large area of the subbasin which is developed and (b) the shorter than typical time frame in which that development occurs. If the same area were developed as smaller parcels, rather than as a large site, development would normally be staggered over a longer period of time. This longer time frame allows a certain "grace" period for problems to be identified and corrective actions incorporated into later development proposals. Not only are formal drainage complaints called in to the County a source of information, but the SEPA public review process accompanying permit review offers an avenue for existing drainage problems to be made known. This longer time frame and input from the affected public offers certain safeguards that any problems resulting from application of the more general drainage planning approach specified in the SWDM are dealt with before additional development in the subbasin proceeds.

Some of the impacts that MDPs would be expected to address include the following:

1. Increase in flow rates and/or volumes that would result in flooding along the natural and/or constructed drainage system, or that would aggravate existing flooding problems, either on-site or downstream.
2. Increase of flow rates and/or volumes, both on- and off-site that would de-stabilize the existing geomorphic balance of the natural drainage systems. Examples would include an increase in the rate or frequency of streambank erosion resulting in bank/slope failures along stream corridors, and downstream sedimentation reducing channel capacity.
3. Alteration of natural topography and/or native vegetation that would result in unstable soil conditions, slopes, or embankments.
4. Alteration of natural hydrologic features or provision of site improvements that would reduce the functional ability of the subbasin to preserve water quality and quantity and/or in-stream and other aquatic habitat values.

5. Alteration of ground water/interflow that would adversely change downstream base flows and/or impair existing water rights.

Criteria

The proposed drainage plan, impact analysis and mitigation measures shall be supported by detailed technical analyses and reports as part of the MDP. In addition to the engineering plans, the MDP shall include appropriate geotechnical investigations, water quality and aquatic habitat analysis, and hydrologic computer modeling (see Section 3.2 in Chapter 3). The report shall also include maintenance and operation provisions for the existing natural drainage system and any on-site drainage facilities. Specific maintenance plans and agreements, identifying maintenance responsibilities, must be provided for any facility privately maintained.

The hydrologic and hydraulic analysis of the site, basin, and downstream system shall be done using the methods described in this Manual. Exceptions are for plans required to prepare hydrologic models using rainfall and stream gage data. Any upstream contributing systems or sub-basins shall be analyzed for both existing and future development conditions (as shown in the latest adopted Community Plan, the King County Comprehensive Plan, or other land use maps). Any agreements, contracts or work scopes for the MDP or monitoring plan are also considered a component of the MDP. Specific requirements and the order for submittal of the various components are given in a detached document entitled*: Master Drainage Planning for Large Site Developments - Process and Requirements*, May 1995

Components of Master Drainage Plans

The MDP consists of several components. These components are typically presented in a drainage plan developed using an approved hydrological model, special reports and studies to identify impacts, mitigation measures to reduce impacts, a technical report containing engineering analyses such as the off-site and flood plain analyses, and a post-development monitoring plan. The drainage plan shall provide a comprehensive analysis of existing and proposed surface and subsurface water quantity and quality conditions for both on and offsite systems. Offsite systems may include upstream and downstream hydrology. Upstream analysis shall include the total drainage area contributing to the site. Downstream analysis shall extend to an acceptable receiving body of water.

DRAFT

Technical elements

At a minimum, specific technical elements of the MDP include the following:

a) A conceptual or preliminary plan of the proposed drainage collection and flow control systems, based upon accurate field topographic mapping and geologic data, should be provided, along with appropriate cross-sections and details necessary to identify drainage system elements.

b) All assumptions, parameters, and input data used in the hydrologic model. Input and output files from hydrologic and/or hydraulic computer models shall be included as an appendix.

c) Hydraulic performance data (stage, storage, discharge) for all elements of the hydrologic system, whether existing or proposed, including lakes, ponds, and wetlands. This data shall be used to route inflow hydrographs to produce outflow hydrographs.

d) Flow data for all existing and proposed conveyance facilities, including streams, swales, pipes, and ditches which will support the proposed system.

e) Floodplain analysis identifying flows, velocities, and extent of flooding for the existing and proposed conditions. Other backwater analysis required to determine existing and proposed conveyance capacity within the MDP and downstream of the MDP.

f) Erosion analysis of on-site and downstream open-drainage systems, identifying flows, velocities, areas of existing and future deposition and channel erosion, and characterization of sediment.

g) Geotechnical analysis of the site and proposed improvements which specifically addresses soils and slope stability for proposed lakes/ponds, road alignments, channel/ravine conditions, building setbacks from steep slopes, vegetative preservation and controls, existing and proposed drainage facilities, and downstream system stability.

h) Ecological analysis to include the physical and biological features of the streams, lakes, wetlands and swales. The features identified shall be keyed to the map produced in Item (2)(b), below.

i) Method and conceptual design for maintaining existing flow regimes in any swales/ravines that may be altered by the development.

j) Method, conceptual design, and location of water quality compensating facilities that may be necessary to replace naturally occurring "biofiltration" functions of site vegetation, i.e. provision and/or preservation of vegetated swales.

k) Description of maintenance design features and provisions that will ensure reliable and long-term facility operation.

l) Provide construction phasing plan that will ensure stormwater/erosion control during development of individual subbasins.

m) Establish a stream flow/rainfall gauging and stream cross section monitoring plan that will document any changes in the levels of flooding, erosion, and sedimentation, and identify responsible parties for necessary mitigation.

Mapping requirements

Mapping for the MDP must be of adequate scale and detail for accurate definition and location of all system elements, both on-site and off-site, and must provide support for hydrologic model characterization. In general, the following are required:

a) Delineation of sub-basins of appropriate size/land use for computer model characterization and hydraulic analysis of all tributary flows.

b) Location and size of all existing and proposed hydrologic features and facilities in the basins. This includes lakes, ponds, wetlands, swales, streams, pipes, and culverts.

c) Overall plan/profile and cross-sections of conveyance systems and identification of the floodplain and floodway and frequency of flooding for existing and developed conditions.

d) Identify areas of in-stream erosion, sedimentation and/or unstable slopes.

e) Identify site soils for use in hydrologic modeling and preliminary analysis for controlling erosion during construction.

f) Identify upstream and downstream habitat condition, i.e., spawning, rearing, and transport areas; pools, riffles, and other in-stream habitat features; and species and populations observed. Locations shall be keyed to the map produced in Item (2)(b), above.

g) Identify general required building setbacks, clearing limits and Native Growth Protection Easements in areas of steep slopes and drainage features.

DRAFT

Review Process

Master Drainage Plans (MDPs) are submitted directly to the Department of Development and Environmental Services Division (DDES) for review. They must, however, be a part of a permit application that has been filed with DDES (see Section 1.1.1). The MDP process should commence concurrently with the SEPA process.

King County has prepared MDP guidelines entitled*: Master Drainage Planning for Large Site Developments - Process and Requirements*, May 1995, which provide technical guidance to implement the requirements of Section 1.3.3 and this Appendix B. The *MDP Guidelines* may be obtained by contacting DDES.

Prior to commencing preparation of the MDP, the applicant and design engineer (including the team that includes other design professionals such as geotechnical engineers and/or biologists, etc.) should request a MDP pre-application meeting for general information followed by a scoping meeting with DDES in order to coordinate the requirements for the hydrologic modeling and other special analysis which may be required. At these meetings, the applicant should present an outline for the proposed MDP that includes a description of the proposed project, a schedule for preparation of the MDP, and a description of any known environmental or regulatory issues related to the proposal.

DDES will review the components of the MDP as submitted, in a timely manner. The fees for review of the MDP will be determined from resources required (e.g., consultant, staff, and equipment) and will be billed to the applicant by King County. Review fees shall be paid by the applicant to King County prior to receiving MDP plan approval.

Following approval in concept of all of the MDP components, the applicant will submit four complete final MDP packages to DDES for approval. Three copies will be kept by DDES, and one copy will be returned to the applicant for their records.

Questions regarding the MDP review process should be directed to DDES.

DRAFT

APPENDIX C

SMALL PROJECT DRAINAGE REQUIREMENTS

DRAFT

KING COUNTY, WASHINGTON

SURFACE WATER DESIGN MANUAL

King County
Department of Natural Resources and Parks

January 24, 2005
Updated November 1, 2006

DRAFT

APPENDIX C
SMALL PROJECT DRAINAGE REQUIREMENTS

KING COUNTY, WASHINGTON
SURFACE WATER DESIGN MANUAL

DRAFT

Section C.1	**Small Project Drainage Review Requirements**	**C-5**
Section C.1.1	Procedure for Determining Requirements	C-7
Section C.1.2	Targeted Drainage Review Requirements	C-10
Section C.1.3	Application of Flow Control BMPs	C-14
Section C.1.4	Application of ESC Measures	C-21
Section C.1.5	Small Project Submittal Requirements	C-24
Section C.2	**Flow Control BMPS~~Flow Control BMPS~~**	**C-25**
Section C.2.1	Full Dispersion	C-26
Section C.2.2	Full Infiltration	C-40
Section C.2.3	Limited Infiltration	C-48
Section C.2.4	Basic Dispersion	C-50
Section C.2.5	Rain Garden	C-58
Section C.2.6	Permeable Pavement	C-63
Section C.2.7	Rainwater Harvesting	C-67
Section C.2.8	Vegetated Roof	C-70
Section C.2.9	Reduced Impervious Surface Credit	C-73
Section C.2.10	Native Growth Retention Credit	C-77
Section C.2.11	Perforated Pipe Connection	C-79
Section C.3	**Erosion and Sediment Control (ESC) Measures**	**C-81**
Section C.3.1	~~Temporary ESC~~Measure	
Section C.3.2	~~Final Stabilization~~Measure	
Section C.4	**Small Project Drainage Plan Specifications**	**C-109**
Section C.4.2	Specifications for Site Plans	C-111
Section C.4.3	BMP Design and Maintenance Details	C-115
Section C.4.4	Written Drainage Assessment	C-116
Section C.5	**Reference Section**	**C-119**
Section C.5.1	Small Project Drainage Review Process	C-119
Section C.5.2	Declaration of Covenant and Grant of Easement Form	C-123

DRAFT

APPENDIX C

SMALL PROJECT DRAINAGE REQUIREMENTS

The drainage requirements in this appendix are for small scale residential and ***agricultural projects*** that are subject to **Small Project Drainage Review** as determined in Section 1.1.2 of the *Surface Water Design Manual* (*SWDM*). *Small Project Drainage Review* is a simplified alternative to the Full Drainage Review process normally conducted by the County as part of its review of permits to evaluate a project's compliance with the core and special requirements of the *SWDM*. The thrust of these requirements is to provide for mitigation and control of increased runoff and pollution from development sites. For larger developments, this typically involves engineering analysis and design of flow control facilities (e.g., detention ponds) to mitigate increased runoff, water quality treatment facilities (e.g., wetponds) to remove pollutants from the runoff, and erosion and sediment controls (ESC) to minimize the discharge of sediment-laden runoff and other pollutants during construction.

For small scale projects, required mitigation of runoff impacts can usually be achieved with simpler measures that can be applied by a non-engineer. These include **flow control BMPs** (Best Management Practices) such as splash blocks or gravel trenches to disperse or infiltrate runoff from impervious areas, or reducing the amount of impervious area and preserving native vegetation. Such measures provide both flow and water quality mitigation. Also included are simpler **erosion and sediment control (ESC) measures** applicable to small projects to prevent the discharge of sediment ~~transport~~ and other pollutants during construction. Examples of ESC measures include phasing or minimizing clearing, ~~terracing exposed slopes~~installing silt fences to contain sediment on site, and placing straw or other mulching materials on exposed soils. It also includes implementation of pollution prevention practices applicable to specific construction activities such as proper use, handling, and storage of materials, chemicals, equipment, and fuel.

In most cases, the small project drainage requirements in this appendix can be met with submittals prepared by contractors, architects, or homeowners without the involvement of a professional engineer. For more information on the Small Project Drainage Review Process, see Reference Section C.5.1 (p. C-119).

Why Flow control BMPs are Necessary for Small Projects

On undeveloped land, most rainwater soaks into the ground and flows slowly to nearby lakes and streams through the upper layers of soil. When that same area is cleared or covered with an impervious surface, the rainwater is no longer captured by dense vegetation and forest duff, but flows quickly and in greater quantities across the site and through pipes and channels to streams and lakes. Also, as it flows over developed surfaces (e.g., driveways, roads, lawns, and pastures), various pollutants generated by human uses of the land are picked up and carried downstream. The increased quantities of runoff from the site, when combined with increases from other sites, results in increased flooding and erosion of downstream properties and damage to aquatic areas habitat. And, the pollutants collected by the runoff degrade the water quality and habitat functions of streams, lakes, and wetlands. Larger developments address these

DRAFT

impacts by storing the runoff in engineered flow control facilities (e.g., detention or infiltration ponds or vaults) that slowly release the runoff downstream and by treating the runoff in engineered water quality facilities (e.g., wet ponds, biofiltration swales, or sand filters).

Controlling flows from small projects is just as important as controlling flows from large developments, because the cumulative effect of uncontrolled flows from many small projects can be equivalent to those from a single large project. For most small projects, however, engineered flow control facilities may not be practicable or even warranted if the quantity of runoff from developed surfaces can be minimized, dispersed, or otherwise infiltrated onsite through the use of flow control BMPs. The same holds true for water quality facilities. While the primary focus of flow control BMPs is to mitigate increased runoff quantities, they are also effective in mitigating increased pollution generated by developed surfaces.

Why ESC is Necessary

ESC measures are necessary because land disturbing activity associated with clearing and grading ~~or construction of a project~~ exposes a site's soils to erosion by stormwater. The soil eroded from disturbed areas is referred to as *sediment*, which is washed downstream and deposited in pipes, ditches, streams and lakes. Sediment deposited in a pipe or ditch reduces its capacity to convey flows and can increase the likelihood of flooding. Sediment deposited in streams clog the gravels that salmon use for spawning. Nutrients contained in the eroded soil that reach lakes can upset the chemical balance of the lake, causing excessive growth of algae, milfoil, and other plants, and decreasing recreational uses such as swimming, boating, and fishing. ESC measures are typically used during construction to prevent soil erosion and/or transport of sediment downstream ~~during development of the site~~ until the site can be stabilized with vegetation cover/landscaping. Other construction activities such as the use, handling, and storage of materials, chemicals, equipment, and fuel can result ~~in~~ contaminates coming into contact with stormwater and potentially washed downstream. Therefore, pollution prevention measures applicable to specific construction activities need to be implemented to avoid the discharge of pollutants from the construction site.

DRAFT

Utility of Appendix C

For projects in Small Project Drainage Review, this appendix outlines the drainage requirements, flow control BMPs, and ESC measures necessary to mitigate the stormwater impacts of development without the construction of expensive stormwater facilities (i.e., flow control and water quality facilities). For projects in Full Drainage Review or other types of drainage review, the flow control BMPs contained in this appendix are referenced for application to any size or type of project as specified in the *SWDM*. In fact, because flow control facilities cannot mitigate all the impacts from developed surfaces, flow control BMPs are required to some extent on nearly all projects in drainage review regardless of whether stormwater facilities are required (see *SWDM* Section 1.2.3.4, "Flow Control BMPs Requirement").

Organization of Appendix C

The information presented in this appendix is organized into five main sections as follows:

- Section C.1, "Small Project Drainage Review Requirements" (p. C-5)
- Section C.2, "Flow Control BMPs~~Flow Control BMPs~~" (p. C-25)
- Section C.3, "Erosion and Sediment Control (ESC) Measures" (p. C-81)
- Section C.4, "Small Project Drainage Plan Specifications" (p. C-109)
- Section C.5, "Reference Section" (p. C-119)

Definitions of Key Terms

Proper application of the small project drainage requirements in this appendix requires an understanding of the following key terms and their definitions. These terms are highlighted in **bold italic** throughout Appendix C. Other important terms are defined in the text when they are first introduced. These are

highlighted in italic when they are first introduced but are not highlighted throughout the appendix as are key terms.

Agricultural project means any project located on, and proposing improvements consistent with, the permitted uses of land zoned for Agriculture (A zoned lands) as defined in KCC 21A.08.

Civil engineer means a person licensed by the State of Washington as a professional engineer in civil engineering.

Erosion hazard area is the *critical area*[1] designation, defined and regulated in KCC 21A, that is applied to areas underlain by soils that are subject to severe erosion when disturbed. See the definition of this term in KCC 21A.06 for more details.

Flood hazard area is the critical area designation, defined and regulated in KCC 21A, that is applied to areas subject to inundation by a 100-year flood event or areas at risk from channel migration. See the definition of this term in KCC 21A.06 for more details. Flood hazard areas generally include, but are not limited to, aquatic areas (e.g., streams or lakes), wetlands, or closed depressions. A flood hazard area may consist of the following components as determined by DDES: 100-year floodplain, zero-rise flood fringe, zero-rise floodway, FEMA floodway, and channel migration zones.

Geotechnical engineer means a civil engineer licensed by the State of Washington who has at least four years of professional employment as a geotechnical engineer in responsible charge, including experience with landslide evaluation. Geotechnical engineers specialize in the design and construction aspects of earth materials.

Land disturbing activity means any activity that results in a change in the existing soil cover, both vegetative and non-vegetative, or the existing soil topography. Land disturbing activities include, but are not limited to demolition, construction, clearing, grading, filling, excavation, and compaction. Land disturbing activity does not include tilling conducted as part of agricultural practices, landscape maintenance, or gardening.

Landslide hazard area is the critical area designation, defined and regulated in KCC 21A, that is applied to areas subject to severe risk of landslide due to topography, soil conditions, and geology. See the definition of this term in KCC 21A.06 for more details.

Engineering geologist means a person licensed by the State of Washington as a geologist specializing in evaluating geologic site characteristics to determine the responses of geologic processes and materials to development activities, such as removal of vegetation; construction activities such as earthwork; applying loads in foundations and embankments; use of earth materials in construction; and modifying ground water flow.

Native vegetated surface means a surface in which the soil conditions, ground cover, and species of vegetation are like those of the original native condition for the ***site***. More specifically, this means (1) the soil is either undisturbed or has been treated according to the "native vegetated landscape" specifications in Appendix C, Section C.2.1.8; (2) the ground is either naturally covered with vegetation litter or has been top-dressed with 4 inches of hog fuel (or other suitable mulch) consistent with the native vegetated landscape specifications in Appendix C; and (3) the vegetation is either (a) comprised predominantly of plant species, other than noxious weeds, that are indigenous to the coastal region of the Pacific Northwest and that reasonably could have been expected to occur naturally on the ***site*** or (b) comprised of plant species specified for a native vegetated landscape in Appendix C. Examples of these plant species include trees such as Douglas fir, western hemlock, western red cedar, alder, big-leaf maple and vine maple; shrubs such as willow, elderberry, salmonberry and salal; and herbaceous plants such as sword fern, foam flower, and fireweed.

DRAFT

[1] *Critical area* includes the following types of hazard or habitat areas defined and regulated in KCC 21A: coal mine hazard area, erosion hazard area, flood hazard area, landslide hazard area, seismic hazard area, steep slope hazard area, volcanic hazard area, aquatic area, wetland, wildlife habitat conservation area, wildlife habitat network, and critical aquifer recharge area.

New impervious surface means the addition of a hard or compacted surface like roofs, pavement, gravel, or dirt; or the addition of a more compacted surface, like paving over pre-existing dirt or gravel.

New pervious surface means the conversion of a native vegetated surface or other native surface to a non-native pervious surface (e.g., conversion of forest or meadow to pasture land, grass land, cultivated land, lawn, landscaping, bare soil, etc.), or any alteration of existing non-native pervious surface that significantly increases surface and storm water runoff (e.g., conversion of pasture land, grass land, or cultivated land to lawn, landscaping, or bare soil; or alteration of soil characteristics).

Pollution-generating impervious surface is an impervious surface considered to be a significant source of pollutants in surface and storm water runoff. Such surfaces include those subject to vehicular use (e.g., driveways, parking areas, roadways, etc.) or storage of erodible or leachable materials, wastes, or chemicals, and which receive direct rainfall or the run-on or blow-in of rainfall. Metal roofs are also considered pollution-generating impervious surface unless they are treated to prevent leaching. See the "Definitions" section of the *SWDM* for more details on this term.

Project site means that portion of a ***site*** and any offsite areas subject to proposed project activities, alterations, and improvements including those required by this appendix.

Replaced impervious surface means any existing impervious surface on the ***project site*** that is proposed to be removed and re-established as impervious surface, excluding impervious surface removed for the sole purpose of installing utilities or performing maintenance. For the purposes of this definition, *removed* means the removal of buildings down to bare soil or the removal of Portland cement concrete (PCC) slabs and pavement or asphaltic concrete (AC) pavement. It does not include the removal of pavement material through grinding or other surface modification unless the entire layer of PCC or AC is removed.

Single family residential project means any project that (a) constructs or modifies a single family dwelling unit, (b) makes improvements (e.g., driveways, roads, outbuildings, play courts, etc.) or clears native vegetation on a lot that contains or will contain a single family dwelling unit, or (c) is a plat, short plat, or boundary line adjustment that creates or adjusts lots that will contain single family dwelling units.

Site (a.k.a. ***development site***), as used in this appendix, means a single parcel, or two or more contiguous parcels that are under common ownership or documented legal control, used as a single parcel for purposes of applying for authority from King County to carry out a development/project proposal.

Steep slope hazard area is the critical area designation, defined and regulated in KCC 21A, that is applied to areas on a slope of 40% or more within a vertical elevation change of at least 10 feet. See the definition of this term in KCC 21A.06 for more details.

Target impervious surface, as used in this appendix, means that portion of a ***site's*** impervious surface required to be mitigated by flow control BMPs. For projects **on small *sites*/lots** (<22,000 square feet), target impervious surface is as specified in Section C.1.3.1 (e.g., roof area or equivalent when applying the full dispersion or full infiltration flow control BMPs). For projects **on large *sites*/lots** (≥22,000 square feet), target impervious surface is all ***new impervious surface*** and ***replaced impervious surface*** together with any existing impervious surface added on or after January 8, 2001 (the effective date of the Endangered Species Act "take prohibition" issued by the federal government to protect Puget Sound Chinook salmon). *Note: any impervious surface on the **site** other than target impervious surface may be mitigated by flow control BMPs in trade for not mitigating an equivalent-sized area of target impervious surface.*

DRAFT

C.1 SMALL PROJECT DRAINAGE REVIEW REQUIREMENTS

Small Project Drainage Review is required for any proposed ***single family residential project*** or ***agricultural project*** that results in 2,000 square feet or more of ***new impervious surface***, ***replaced impervious surface***, or ***new*** plus ***replaced impervious surface***, or ~~35,000~~7,000 square feet or more of ~~***new pervious surface***~~ ***land disturbing activity***, and meets one of the following criteria:

- The project will result in no more than 10,000 square feet of **total impervious surface** added on or after January 8, 2001 (the effective date of the Endangered Species Act "take prohibition" issued by the Federal government to protect Puget Sound Chinook Salmon), no more than 5,000 square feet of ***new impervious surface***, and no more than 35,000 square feet of ***new pervious surface*** (for ***sites*** zoned as RA, F, or A, ~~this~~ the ***new pervious surface*** threshold may be increased to ~~70,000~~52,500 square feet or ~~35% of the ***site***, whichever is greater~~to the remaining portion of the ***site*** if 65% or more of the ***site*** is preserved in native vegetation by clearing limit, covenant, easement, or tract), OR
- The project will result in no more than 10,000 square feet[13] of **total impervious surface** added on or after January 8, 2001 and its ***new pervious surface*** area will be no more than 35,000 square feet minus 3.25 times the area of ***new impervious surface*** being proposed by the project (for ***sites*** larger than 22,000 square feet, a factor of 2.25 may be used instead of 3.25, and for ***sites*** zoned as RA, F, or A, the allowable amount of ***new pervious surface*** calculated herein may be increased by 50% or may be the remaining portion of ***site*** if 65% or more of the ***site*** is preserved in native vegetation by clearing limit, covenant, easement, or tract), OR
- The project will result in no more than 4% **total impervious surface** and 15% ***new pervious surface*** on a single parcel ***site*** zoned as RA or F, or on a single or multiple parcel ***site*** zoned as A, AND all impervious surface area, except 10,000 square feet of it, will be set back from its natural location of discharge from the ***site*** at least 100 feet for every 10,000 square feet of **total impervious area**.

*Note: for the purposes applying this threshold to a proposed single family residential subdivision (i.e., plat or short plat project), the impervious surface coverage assumed on each created lot shall be 4,000 square feet (8,000 square feet if the **site** is zoned as RA) or the maximum allowed by KCC 21A.12.030, whichever is less. A lower impervious surface coverage may be assumed for any lot in which the lower impervious surface coverage is set as the maximum through a declaration of covenant recorded for the lot. Also, the **new pervious surface** assumed on each created lot shall be the entire lot area, except the assumed impervious portion and any portion in which native conditions are preserved by a clearing limit per KCC 16.82, a covenant or easement recorded for the lot, or a tract dedicated by the proposed subdivision.*

DRAFT

All projects subject to Small Project Drainage Review must comply with the following two basic mitigation requirements in this appendix:

1. Apply **flow control BMPs** to developed surfaces as directed in Section C.1.3 (p. C-14), and
2. Apply **erosion and sediment control (ESC) measures** to disturbed areas during construction as directed in Section C.1.4 (p. C-21).

To show how these requirements will be met, project applicants must submit drainage plans and supporting documentation as directed in Section C.1.5 (p. C-24).

In addition, some small projects may have ***site***-specific or project-specific drainage concerns or requirements that must be addressed by a ***civil engineer*** or County engineering review staff. Examples include the presence of flood, erosion, or landslide hazards on or near the ***site***, safe conveyance of stormwater through the ***site***, and application of special drainage requirements. The County will identify any such issues during Small Project Drainage Review and will require a separate **Targeted Drainage Review** in addition to Small Project Drainage Review to address them (see Section C.1.2, p. C-10). This may require the additional submittal of ***site*** information, reports, and/or engineering plans signed and

stamped by a ***civil engineer***. For more information on how Targeted Drainage Review relates to Small Project Drainage Review, see Reference Section C.5.1 (p. C-119).

Use Section C.1.1 (below) to determine the scope of requirements, if any, that must be addressed by a ***civil engineer*** and/or County engineering review staff under Targeted Drainage Review, and learn where to look to determine the scope of requirements for application of flow control BMPs and ESC measures and submittal of information necessary for Small Project Drainage Review.

DRAFT

C.1.1 PROCEDURE FOR DETERMINING REQUIREMENTS

The following questionnaire/flow chart (Table C.1.1.A) is intended to be a guide for determining the scope of requirements that will apply to a project in Small Project Drainage Review, and Targeted Drainage Review if applicable. It will refer or direct you to more specific information on the application of requirements found in subsequent subsections, and in some cases, King County Code.

TABLE C.1.1.A QUESTIONNAIRE/FLOW CHART FOR DETERMINING REQUIREMENTS

No.	Question	If YES	If NO
1.	Is the proposed project subject to drainage review as determined by consulting *DDES*[2] or Section 1.1.1 of the *SWDM*.	Go to the next question.	The project does not need to meet the requirements of the *SWDM* or this appendix.
2.	Is the project subject to Small Project Drainage Review as determined in Section C.1 (p. C-5) and confirmed with DDES?	Step through the following questions to (1) determine the scope of requirements, if any, that must be addressed by a ***civil engineer*** and/or DDES under Targeted Drainage Review, and (2) learn where to look to determine the scope of requirements for application of flow control BMPs and ESC measures and submittal of information necessary for Small Project Drainage Review.	Full Drainage Review, Targeted Drainage Review, or Large Project Drainage Review is required as specified in the *SWDM*, and engineering plans signed and stamped by a ***civil engineer*** must be submitted to DDES. Use the *SWDM* and not this appendix to determine drainage review requirements.
3.	Does the ***site*** contain or is it adjacent to a ***flood hazard area*** as determined by DDES through a "critical area review" per KCC 21A.24.100?	A notice on title will be required as specified in KCC 21A.24.170 and associated public rule, and any proposed structures or substantial improvements within the 100-year floodplain will require a FEMA Elevation Certificate completed by a ***civil engineer*** or ***land surveyor*** per KCC 21A.24.270. See Section C.1.2.1 (p. C-11) for further details. Go to the next question.	Skip to Question 7 (p. C-9).

DRAFT

[2] *DDES* means the King County Department of Development and Environmental Services, which is the department responsible for conducting drainage review of proposed projects that are subject to a King County development permit or approval. Applicants for a permit or approval should contact DDES permit review staff prior to submittal to determine/confirm that drainage review is required, and if so, what type of drainage review is appropriate. Applicants may also arrange a predesign meeting with DDES permit review staff to confirm the type of drainage review and scope of drainage requirements that apply to the proposed project.

TABLE C.1.1.A QUESTIONNAIRE/FLOW CHART FOR DETERMINING REQUIREMENTS			
No.	**Question**	**If YES**	**If NO**
4.	Has the 100-year floodplain boundary and *base flood elevation*[3] been determined for the ***flood hazard area*** based on available flood hazard data and deemed acceptable by DDES in accordance with KCC 21A.24.230?	The floodplain boundary and base flood elevation must be shown on the project's ***site*** plans and on the face of any recorded documents if the project is a subdivision. See Section C.1.2.1 (p. C-11) for further details. Go to the next question.	A floodplain study in accordance with Section 4.4.2 of the *SWDM* must be completed by a ***civil engineer*** (or authorized agency) to determine the appropriate floodplain boundary and base flood elevation that will be used by DDES to evaluate the proposed project's compliance with the ***flood hazard area*** development standards in KCC 21A.24. See Section C.1.2.1 (p. C-11) for further details and requirements. Go to the next question.
5.	Is the ***project site*** portion of the ***site*** located on land that is entirely outside of the 100-year floodplain boundary and above the base flood elevation determined in Question 4?	Go to the next question.	The ***project site*** must be relocated to land that is outside of the 100-year floodplain and above the base flood elevation, or a ***civil engineer*** must evaluate and modify the project as needed to comply with the standards in KCC 21A.24 for development within the floodplain. This may require a major floodplain study in accordance with Section 4.4.2 of the *SWDM* to determine the floodway boundary of the ***flood hazard area***. See Section C.1.2.1 (p. C-11) for further details and requirements. Go to the next question.
6.	Has a *channel migration zone*[4] been mapped by King County for the ***flood hazard area***?	The severe and moderate channel migration hazard area boundaries must be delineated on the project's ***site*** plans and on any recorded documents if the project is a subdivision. DDES will review the proposed project for compliance with the channel migration zone development standards in KCC 21A.24.275. Go to the next question.	Go to the next question.

DRAFT

[3] *Base flood elevation* is the elevation of the 100-year floodplain, at the ***project site***, that has been determined in accordance with the standards in KCC 21A.24.230.

[4] *Channel migration zone* means those areas within the lateral extent of likely stream channel movement that are subject to risk due to stream bank destabilization, rapid stream incision, stream bank erosion and shifts in the location of stream channels, as shown on King County's Channel Migration Zone maps. The channel migration zone includes two additional components, the *severe channel migration hazard area*, which includes the present channel width plus the area at greatest risk of lateral movement, and the *moderate channel migration hazard area*, which is the remaining portion of the channel migration zone.

TABLE C.1.1.A QUESTIONNAIRE/FLOW CHART FOR DETERMINING REQUIREMENTS			
No.	**Question**	**If YES**	**If NO**
7.	Does the ***site*** contain or is it adjacent to an ***erosion hazard area*** as determined by DDES through a "critical area review" per KCC 21A.24.100?	DDES may require additional flow control or ESC measures designed by a ***civil engineer*** to avoid impacts to these areas. See Section C.1.2.2 (p. C-12) for further details. Go to the next question.	Go to the next question.
8.	Does the ***site*** contain or is it adjacent to a ***steep slope hazard area*** or ***landslide hazard area*** as determined by DDES through a "critical area review" per KCC 21A.24.100?	DDES will review the project for compliance with the development standards for these hazard areas as specified in KCC 21A.24. The DDES staff geologist must approve all drainage systems for the project and may require a geotechnical analysis. A tightline designed by a ***civil engineer*** may be required to safely convey any concentrated runoff through the hazard area. See Section C.1.2.3 (p. C-12) for further details. Go to the next question.	Go to the next question.
9.	Is the project located in a basin planning area, community planning area, Critical Drainage Area (CDA), or other area with adopted area-specific drainage requirements AND does the project exceed the minimum thresholds for these drainage requirements as determined by DDES (see Section C.1.2.4, p. C-13)?	The project must meet the area-specific drainage requirements, some of which may require drainage systems or measures designed by a ***civil engineer***. DDES will determine which requirements are applicable and if engineering plans signed and stamped by a ***civil engineer*** are required. Go to the next question	Go to the next question.
10.	Is the project proposing ~~3~~ 1 acre~~s~~ or more of ***land disturbing activity*** (see Section C.1.2.5, p. C-13)?	ESC plans signed and stamped by a ***civil engineer*** are required to address compliance with the ESC standards for larger projects specified in ~~Appendix D of~~ the *SWDM*. Go to the next question.	Go to the next question.
11.	Is the project proposing to construct or modify a drainage pipe or ditch that is 12 inches or more in diameter/depth, or does the ***project site*** receive surface or storm water from a drainage pipe or ditch that is 12 inches or more in diameter/depth (see Section C.1.2.6, p. C-13)?	Engineering plans signed and stamped by a ***civil engineer*** are required to address compliance with the Targeted Drainage Review requirements pertaining to constructed or modified conveyance systems in the *SWDM*. Go to the next question.	Go to the next question.
12.	Are there any other drainage features onsite (swales, ditches, etc.) that may impact the proposed project or downstream properties or be impacted by the project?	Engineering analysis by a ***civil engineer*** may be required. DDES staff will need to assess features. Go to the next question.	Go to the next question.

DRAFT

TABLE C.1.1.A QUESTIONNAIRE/FLOW CHART FOR DETERMINING REQUIREMENTS			
No.	**Question**	**If YES**	**If NO**
13.	Is the proposed project on a ***site/lot*** smaller than 22,000 square feet?	Apply flow control BMPs in accordance with the Small Lot BMP Requirements in Section C.1.3.1 (p. C-14) and the Flow Control BMP Implementation Requirements in Section C.1.3.3 (p. C-19). Apply ESC measures in accordance with Section C.1.4 (p. C-21). Comply with the small project submittal requirements in Section C.1.5 (p. C-24)	Apply flow control BMPs in compliance with the Large Lot BMP Requirements in Section C.1.3.2 (p. C-16) and the Flow Control BMP Implementation Requirements in Section C.1.3.3 (p. C-19). Apply ESC measures in accordance with Section C.1.4 (p. C-21). Comply with the small project submittal requirements in Section C.1.5 (p. C-24)

C.1.2 TARGETED DRAINAGE REVIEW REQUIREMENTS

Targeted Drainage Review is usually required in addition to Small Project Drainage Review for any projects that have one or more of the following characteristics as determined by DDES:

- The project's drainage or improvements may impact or be impacted by the presence of certain critical areas (i.e., streams, lakes, wetlands, ***flood hazard areas***, ***erosion hazard areas***, ***steep slope hazard areas***, and ***landslide hazard areas***).
- The project is subject to additional drainage requirements by virtue of its location in areas where special drainage requirements have been adopted.
- The project proposes ~~3~~ 1 acre~~s~~ or more of ***land disturbing activity***.
- The project proposes to construct or modify a drainage pipe/ditch that is 12 inches or more in size or depth or receives runoff from a drainage pipe/ditch that is 12 inches or more in size or depth.
- The project has other concerns that require evaluation, analysis, and/or design by ***civil engineer***.

For some small projects in Targeted Drainage Review, DDES permit review staff may be able to address some of the above concerns/requirements without a ***civil engineer*** through approval of the flow control BMPs/ESC measures in this appendix combined with increased setbacks, geotechnical review, or permit approval conditions. In other cases, a ***civil engineer*** will be required to address specific requirements in the *SWDM* and submit engineering plans.

Note: Targeted Drainage Review is not a substitute for a Critical Area Review. Small project proposals are not exempted from applicable requirements of KCC 21A.24 (critical areas regulations) including critical area reports, notices on title, buffers, building setbacks, and development standards/alterations.

DRAFT

C.1.2.1 FLOOD HAZARD AREAS

Some small projects may be on ***sites*** that contain or are adjacent to a ***flood hazard area*** for a stream, lake, wetland, *closed depression*,[5] marine shoreline, or other water feature as determined by DDES through a critical area review. If the project is on such a ***site***, the 100-year **floodplain boundary** and **base flood elevation**, at a minimum, must be determined and shown on the project's ***site*** plans[6] and on the face of any recorded documents for a subdivision. If the ***flood hazard area*** includes a channel migration zone mapped by King County, the severe and moderate channel migration hazard area boundaries must also be delineated on the project's ***site*** plans and on any recorded documents if the project is a subdivision. DDES will review the proposed project for compliance with the channel migration zone development standards in KCC 21A.24.275.

The floodplain and base flood elevation may be identified from an **already completed 100-year floodplain study** approved by DDES in accordance with KCC 21A.24.230. Examples of approved floodplain studies include the Federal Emergency Management Agency (FEMA) mapping of the 100-year floodplain and base flood elevation, and floodplain mapping completed by the King County Department of Natural Resources, Water and Land Resources Division (WLRD).

If an **approved floodplain study does not exist** for the ***site***, one must be prepared by a ***civil engineer*** in accordance with the methods and procedures in Section 4.4.2 of the *SWDM*. For some ***sites***, if the ***project site*** is at least 10 feet above the ordinary high water mark or 2 feet above the downstream overflow elevation of a water feature, a simplified study per Section 4.4.2 may be used to identify an "approximate" floodplain boundary and base flood elevation. In some cases, DDES engineering review staff, in lieu of a ***civil engineer***, may identify this approximate floodplain boundary and base flood elevation based on elevation information provided by the applicant's *land surveyor*.[7]

If any portion of the project is within the 100-year floodplain, the 100-year **floodway** boundary must also be determined and shown on the project's ***site*** plans and on the face of any recorded documents for a subdivision. As with the floodplain boundary and base flood elevation, a floodplain study may be required in accordance with Section 4.4.2 of the *SWDM* to determine the floodway if one has not already been completed and approved by DDES for the ***site***.

If the ***flood hazard area*** includes a King County-mapped channel migration zone, the two component channel migration hazard area boundaries (severe and moderate) must be shown on the project's ***site*** plans and on the face of any recorded documents for a subdivision.

DDES uses all of the ***flood hazard area*** **information** determined above to review a project for compliance with FEMA regulations and the County's ***flood hazard area*** regulations in KCC 21A.24. If DDES staff determines that the proposed project meets these regulations for building in or near a floodplain, the permit may be approved with specific conditions to ensure the project does not impact the floodplain and that a flood will have minimal impact on the ***project site***. Examples of conditions could include:

- Building on a portion of the ***site*** where the existing ground is higher than the 100-year flood elevation,
- Building within the flood fringe using a pier or pile foundation to provide unrestricted flow through the foundation area,
- Placing no fill within any portion of the floodplain without providing equivalent compensating storage.

DRAFT

[5] *Closed depression* means an area greater than 5,000 square feet at overflow elevation that is low-lying and that has no or such a limited surface water outlet that the area acts as a stormwater retention facility. The primary loss of water volume from a closed depression is through evapotranspiration and discharge into the ground rather than surface flow.

[6] *Note: for **single family residential permits** and permits for **agricultural projects**, DDES may waive the requirement for floodplain delineation on the site plan, provided the plan notes that a floodplain exists and indicates the base flood elevation.*

[7] *Land surveyor* means a person licensed by the State of Washington as a professional land surveyor.

For permits proposing a building within the 100-year floodplain, a "**FEMA Elevation Certificate**" must be completed by a ***civil engineer*** or **land surveyor** and submitted to DDES after the foundation is constructed but prior to the framing approval. The certificate documents the elevation of the lowest finished floor of the building as determined by or under the direction of a ***civil engineer* or land surveyor**. This certificate is often required by mortgage companies, and it helps the homeowner obtain proper flood insurance and maintain accurate insurance ratings for flood-prone areas.

Prior to permit approval (or in the case of a short plat, at or before recording), a **notice on title** must be recorded for the ***site*** (or the individual lots of a short plat project) as specified in KCC 21A.24.170 and its associated public rule. The notice on title must note that a ***flood hazard area*** exists and that no fill or alteration is allowed within the ***flood hazard area***. The base flood elevation must also be noted.

If DDES staff determines that the proposed project does not meet FEMA or County regulations for building in or near a floodplain, the applicant may be required to hire a ***civil engineer*** to address compliance with these regulations. If the ***project site*** is partially or fully located in the mapped 100-year floodway, the permit may be denied as federal and County regulations prohibit building structures in the floodway.

C.1.2.2 EROSION HAZARD AREAS

Some projects may drain to or be on ***sites*** that contain an ***erosion hazard area***, which is a critical area defined and regulated in KCC 21A. Vegetation removal and grading make ***erosion hazard areas*** prone to erosion and sediment transport, and the *point discharge*[8] of stormwater runoff can cause erosion in such areas even if they are well vegetated. Small projects determined to drain to these areas may be required to provide additional flow control BMPs or other measures that must be engineered. In addition, more strict ESC measures may be required as well as a notice on title as specified in KCC 21A.24. If flow control and erosion and sediment control cannot be adequately addressed by the flow control BMPs and ESC measures in this appendix, DDES may require a ***civil engineer*** to provide a ***site-***specific construction sequence and engineered site improvement/ESC plans.

DRAFT

C.1.2.3 STEEP SLOPE AND LANDSLIDE HAZARD AREAS

Some projects may drain to or be on ***sites*** that contain or are adjacent to a ***steep slope hazard area*** or a ***landslide hazard area***. Storm runoff not properly controlled can cause erosion, landslides, raveling, and instability. Point discharge of runoff is not allowed near or onto these areas. Flow control BMPs may be allowed if installed according to the design requirements and specifications in Section C.2.

*All drainage systems on or near **steep slope hazard areas** or **landslide hazard areas** must be approved by the DDES staff geologist.*

If flow control BMPs are not adequate to prevent adverse impacts to a ***steep slope hazard area*** or ***landslide hazard area*** as determined by the DDES staff geologist, a *tightline*[9] may be constructed to convey the runoff to a stable discharge point with adequate energy dissipation. The location of the discharge point must be onsite or within a drainage easement or public right-of-way. The tightline must conform to the materials and design requirements of Section 4.2 of the *Surface Water Design Manual* and must be approved by a ***geotechnical engineer***, ***engineering geologist***, or the DDES staff geologist.

Tightlines typically require design by a ***civil engineer*** in accordance with Section 4.2.2.1 of the *Surface Water Design Manual*. However, for a simple installation serving one lot, DDES engineering and/or geotechnical staff may provide a standardized design if they determine that the standardized tightline and energy dissipation system is appropriate. *Note: For most small projects with less than 10,000 square feet of impervious surface, the tightline system may be constructed using 6-inch diameter "solid wall*

[8] *Point discharge* means a concentrated flow from a pipe, ditch, or other similar drainage feature.

[9] *Tightline* means a continuous length of pipe that conveys water from one point to another (typically down a steep slope) with no inlets or collection points in between.

polyethylene (SWPE) pipe" with a standard outfall. See Figure 4.2.2.D of the Surface Water Design Manual for an example tightline outfall.

C.1.2.4 ADOPTED AREA-SPECIFIC DRAINAGE REQUIREMENTS

Some projects may be subject to additional drainage requirements and/or engineering analysis by virtue of their location in an area where special drainage requirements have been adopted via a basin plan, salmon conservation plan, stormwater compliance plan, lake management plan, flood hazard reduction plan, etc. Projects located in such areas must comply with these requirements if the requirements are more stringent than the requirements of this appendix as determined by DDES.

Engineering analysis and/or engineering plans signed and stamped by a ***civil engineer*** may be required to comply with these requirements or show that the project is exempt or below the threshold for application of specific requirements. DDES staff will determine which requirements apply and the extent of engineering analysis required. When engineering analysis shows that a requirement threshold will not be exceeded, the project's applicant, contractors, and inspectors must be notified of any actions or limitations necessary to prevent that threshold from being exceeded.

C.1.2.5 ~~THREE~~ ONE ACRE~~S~~ OR MORE OF LAND DISTURBING ACTIVITY

Small projects proposing ~~3~~ 1 acre~~s~~ or more of ***land disturbing activity*** typically ~~require~~ necessitate more expert attention to required ESC and other pollution prevention measures. Consequently, a construction stormwater pollution prevention (CSWPP) plan will need to be prepared ~~an engineered sediment pond designed~~ in accordance with the ~~ESC~~ CSWPP plan requirements ~~Standards~~ for larger projects specified in ~~Appendix D~~Chapter 2 of the *SWDM*. In order to comply with these ~~standards~~requirements, an engineered ~~ESC~~ CSWPP plan and limited scope Technical Information Report (TIR) signed and stamped by a ***civil engineer*** will be required. DDES may waive this requirement if the ***site's*** topography is such that no more than ~~3~~ 1 acre~~s~~ of disturbed area will drain to one location.

DRAFT

C.1.2.6 PIPES/DITCHES TWELVE INCHES OR MORE IN SIZE OR DEPTH

Small projects that propose to construct or modify a drainage pipe/ditch that is 12 inches or more in size or depth or that receive runoff from a drainage pipe/ditch that is 12 inches or more in size or depth, must submit engineering plans meeting the requirements outlined for Targeted Drainage Review Category #2 (see Section 1.1.2.2 of the *Surface Water Design Manual*). This requirement may be waived by DDES for driveway culverts less than 25 feet in length that match downstream and upstream culvert sizes.

C.1.3 APPLICATION OF FLOW CONTROL BMPS

Flow control BMPs are methods and designs for dispersing, infiltrating, or otherwise reducing or preventing development-related increases in runoff at or near the sources of those increases. Flow control BMPs include, but are not limited to, preservation and use of ***native vegetated surfaces*** to fully disperse runoff; use of other pervious surfaces to disperse runoff; roof downspout infiltration; permeable pavements; rainwater harvesting; vegetated roofs; and reduction of development footprint.

For projects subject to Small Project Drainage Review, the application of flow control BMPs is mandatory for *individual lot projects* (i.e., projects not subdividing land) and is optional for subdivision projects unless otherwise specified by DDES. For individual lot projects, flow control BMPs must be applied as specified by one of the following two sets of BMP requirements, whichever is applicable based on the size of ***site*/lot**:

- "Small Lot BMP Requirements" (for ***sites*/lots** <22,000 square feet), Section C.1.3.1
- "Large Lot BMP Requirements" (for ***sites*/lots** ≥22,000 square feet), Section C.1.3.2

These requirements specify both the order of preference for selection of flow control BMPs and their extent of application to the developed surfaces of an **individual lot project**. This application of requirements is illustrated by the flow chart in Figure C.1.3.A~~Figure C.1.3.A~~ (p. C-121). In addition, the implementation of flow control BMPs by projects on either size of ***site*/lot** must be in accordance with the "BMP Implementation Requirements" detailed in Section C.1.3.3.

If the proposed project is a **single family residential subdivision** (i.e., plat or short plat project), the application of flow control BMPs for future anticipated improvements on the lots created by the subdivision may be deferred until an individual lot project is proposed for permit approval on each lot. Alternatively, the BMPs required for anticipated improvements on each lot may be installed as part of the subdivision project if the applicant so chooses. In either case, the required application of BMPs, in terms of order of preference and extent of application to developed surfaces, is the same as that for an **individual lot project** (i.e., as specified in Sections C.1.3.1 or C.1.3.2, and C.1.3.3).

Note: road right-of-way improvements constructed as part of a subdivision project may require implementation of flow control BMPs or other mitigation as determined necessary by DDES.

DRAFT

C.1.3.1 SMALL LOT BMP REQUIREMENTS

Any proposed project that is on an individual ***site*/lot smaller than 22,000 square feet** must comply with the flow control BMP application requirements in this section.

A. MITIGATION OF IMPERVIOUS SURFACE

For projects subject to small lot BMP requirements, flow control BMPs must be applied to the project's ***target impervious surface*** according to the order of preference and extent of application specified in the following requirements:

1. The feasibility and applicability of full dispersion as detailed in Section C.2.1 (p. C-26) must be evaluated for the **roof area** (or an impervious area of equivalent size) on the ***site*/lot**. If feasible and applicable, **full dispersion of roof runoff** must be implemented as part of the proposed project. Typically, small lot full dispersion will be applicable only in subdivisions where enough forest was preserved by tract, easement, or covenant to meet the minimum requirements for full dispersion in Section C.2.1.1 (p. C-26). If this first requirement is met for the ***site*/lot**, no other flow control BMPs are required for mitigation of impervious surface, and the remaining requirements below are optional.
2. Where full dispersion of **roof runoff** (or equivalent) is not feasible or applicable, or will cause flooding or erosion impacts, the feasibility and applicability of full infiltration as detailed in Section C.2.2 (p. C-40) must be evaluated for roof runoff (*note, this will require a soils report for the **site/lot***).

If feasible and applicable, **full infiltration of roof runoff** must be implemented as part of the proposed project. If this requirement or the full dispersion requirement above is met for the ***site*/lot**, no other flow control BMPs are required, and the remaining requirements below are optional.

3. Where full dispersion or full infiltration of **roof runoff** as specified in Requirements 1 and 2 above is not feasible or applicable, or will cause flooding or erosion impacts, **one or more of the following BMPs** must be applied to (or used to mitigate for) an impervious area equal to at least 10% of the ***site*/lot** for ***site*/lot sizes up to 11,000 square feet** and at least 20% of the ***site*/lot** for ***site*/lot sizes between 11,000 and 22,000 square feet**. For projects located within a *critical aquifer recharge area*,[10] these impervious area amounts must be doubled. The BMPs listed below may be located anywhere on the ***site*/lot** subject to the limitations and design specifications for each BMP. These BMPs must be implemented as part of the proposed project.

   - **Limited Infiltration~~Limited Infiltration~~** (see Section C.2.3)
   - **Basic Dispersion~~Basic Dispersion~~** (see Section C.2.4),
   - **Rain Garden~~Rain Garden~~** (see Section C.2.5),
   - **Permeable Pavement~~Permeable Pavement~~** (see Section C.2.6),
   - **Rainwater Harvesting~~Rainwater Harvesting~~** (see Section C.2.7),
   - **Vegetated Roof~~Vegetated Roof~~** (see Section C.2.8),
   - **Reduced Impervious Surface Credit~~Reduced Impervious Surface Credit~~** (see Section C.2.9),
   - **Native Growth Retention Credit~~Native Growth Retention Credit~~** (see Section C.2.10).

4. Any proposed pipe connection of roof downspouts to the *local drainage system*[11] must be via a **perforated pipe connection** as detailed in Section C.2.11.

DRAFT

B. MITIGATION OF NEW PERVIOUS SURFACE

For projects subject to small lot BMP requirements, **no flow control BMPs are required** for ***new pervious surface***. *Note, however, that KCC 16.82.100(G) requires amendment of the soil to mitigate for lost moisture holding capacity in any area that has been compacted or that has had some or all of the duff layer or underlying topsoil removed. The amendment must be such that the replaced topsoil is a minimum of 8 inches thick, unless the applicant demonstrates that a different thickness will provide conditions equivalent to the soil moisture holding capacity native to the* ***site****. The replaced topsoil must have an organic content of 8-13% dry weight and a pH suitable for the proposed surface vegetation (for most soils in King County, 4 inches of well-rotted compost tilled into the top 8 inches of soil is sufficient to achieve the organic content standard). The amendment must take place between May 1 and October 1.*

C. MITIGATION OF WATER QUALITY IMPACTS

For projects subject to small lot BMP requirements, most water quality impacts ~~are~~ will be adequately addressed through proper application of flow control BMPs to impervious surface as specified above. However, if the project results in 5,000 square feet or more of **new *pollution-generating impervious surface*** from which runoff is not fully dispersed in accordance with Section C.2.1 (p. C-26), then one of the following actions must be taken:

[10] *Critical aquifer recharge area* is the critical area designation, defined and regulated in KCC 21A, that is applied to areas where extra protection of groundwater quantity and quality is needed because of known susceptibility to contamination and importance to drinking water supply. Such areas are delineated on the *King County Critical Aquifer Recharge Area Map* available at DDES or on the County's Geographic Information System (GIS). See the definition of this term in KCC 21A.06 for more details.

[11] *Local drainage system* means any natural or constructed drainage feature that collects and concentrates runoff from the ***site*** and discharges it downstream.

- Reduce existing or proposed ***pollution-generating impervious surface*** so that the 5,000-square-foot threshold is not triggered (e.g., reduce the amount of metal roofing that is pollution-generating), or
- Provide a water quality facility designed by a ***civil engineer*** in accordance with Section 1.2.8 of the SWDM to treat the runoff that is not fully dispersed from all **new *pollution-generating impervious surface***.

C.1.3.2 LARGE LOT BMP REQUIREMENTS

Any proposed project that is on an individual ***site*/lot greater than or equal to 22,000 square feet** must comply with the flow control BMP application requirements in this section. *Note that projects applying for a Rural Stewardship Plan or Farm Management Plan as allowed in KCC 21A.24 to reduce buffer requirements or clearing standards may be required to implement additional flow control BMPs to mitigate for lost habitat functions.*

A. MITIGATION OF IMPERVIOUS SURFACE

For projects subject to large lot BMP requirements, flow control BMPs must be applied to the project's ***target impervious surface*** according to the order of preference and extent of application specified in the following requirements:

1. The feasibility and applicability of **full dispersion** as detailed in Section C.2.1 (p. C-26) must be evaluated for all ***target impervious surface***. If feasible and applicable, full dispersion must be implemented as part of the proposed project. Typically, full dispersion will be applicable only to ***sites*/lots** or portions of ***sites*/lots** where enough forest is preserved by a clearing limit per KCC 16.82 or by recorded tract, easement, or covenant to meet the minimum requirements for full dispersion in Section C.2.1.1 (p. C-26). If this requirement for full dispersion is met for all ***target impervious surface*** of the project, no other flow control BMPs are required.
2. For that portion of ***target impervious surface*** where full dispersion is not feasible or applicable, or will cause flooding or erosion impacts, the feasibility and applicability of **full infiltration of roof runoff** as detailed in Section C.2.2 (p. C-40) must be evaluated (*note, this will require a soils report for the **site/lot***). If feasible and applicable, full infiltration of roof runoff must be implemented as part of the proposed project.
3. For that portion of ***target impervious surface*** not addressed by Requirements 1 and 2 above, **one or more of the following BMPs** must be implemented as part of the proposed project:
   - **Limited Infiltration**~~**Limited Infiltration**~~ (see Section C.2.3),
   - **Basic Dispersion**~~**Basic Dispersion**~~ (see Section C.2.4),
   - **Rain Garden**~~**Rain Garden**~~ (see Section C.2.5),
   - **Permeable Pavement**~~**Permeable Pavement**~~ (see Section C.2.6),
   - **Rainwater Harvesting**~~**Rainwater Harvesting**~~ (see Section C.2.7),
   - **Vegetated Roof**~~**Vegetated Roof**~~ (see Section C.2.8),
   - **Reduced Impervious Surface Credit**~~**Reduced Impervious Surface Credit**~~ (see Section C.2.9),
   - **Native Growth Retention Credit**~~**Native Growth Retention Credit**~~ (see Section C.2.10).
4. Any proposed pipe connection of roof downspouts to the local drainage system must be via a **perforated pipe connection** as detailed in Section C.2.11.

DRAFT

B. MITIGATION OF NEW PERVIOUS SURFACE

For projects subject to large lot BMP requirements, flow control BMPs are required for all ***new pervious surface*** when it exceeds 35,000 square feet. Flow control BMPs must be applied to ***new pervious surface*** according to the order of preference and extent of application specified in the following requirements:

1. The feasibility and applicability of **full dispersion** as detailed in Section C.2.1 (p. C-26) must be evaluated for all ***new pervious surface***. If feasible and applicable, full dispersion must be implemented as part of the proposed project. Typically, full dispersion will be applicable only to ***sites*/lots** or portions of ***sites*/lots** where enough forest is preserved by a clearing limit per KCC 16.82 or by recorded tract, easement, or covenant to meet the minimum requirements for full dispersion in Section C.2.1.1 (p. C-26). If this requirement for full dispersion is met for all pervious surfaces of the project, no other flow control BMPs are required.

2. For that portion of ***new pervious surface*** not addressed in Requirement 1 above, **one or more of the following BMPs** must be implemented as part of the proposed project. This requirement may be waived or reduced where DDES determines that the requirement is not practicable or will cause flooding or erosion impacts.

   - **Basic Dispersion~~Basic Dispersion~~** (see Section C.2.4),
   - **Rain Garden~~Rain Garden~~** (see Section C.2.5).

Note: In addition to the above requirements, KCC 16.82.100(G) requires amendment of the soil to mitigate for lost moisture holding capacity in any area that has been compacted or that has had some or all of the duff layer or underlying topsoil removed. The amendment must be such that the replaced topsoil is a minimum of 8 inches thick, unless the applicant demonstrates that a different thickness will provide conditions equivalent to the soil moisture holding capacity native to the ***site****. The replaced topsoil must have an organic content of 8-13% dry weight and a pH suitable for the proposed surface vegetation (for most soils in King County, 4 inches of well-rotted compost tilled into the top 8 inches of soil is sufficient to achieve the organic content standard). The amendment must take place between May 1 and October 1.*

DRAFT

C. MITIGATION OF WATER QUALITY IMPACTS

For projects subject to large lot BMP requirements, most water quality impacts will be adequately addressed through proper application of flow control BMPs to impervious and pervious surfaces as specified above. However, if the project results in 5,000 square feet or more of **new *pollution-generating impervious surface*** from which runoff is not fully dispersed in accordance with Section C.2.1 (p. C-26), then one of the following actions must be taken:

- Reduce existing or proposed ***pollution-generating impervious surface*** so that the 5,000-square-foot threshold is not triggered (e.g., reduce the amount of metal roofing that is pollution-generating), or
- Provide a water quality facility designed by a ***civil engineer*** in accordance with Section 1.2.8 of the SWDM to treat the runoff that is not fully dispersed from all **new *pollution-generating impervious surface***.

FIGURE C.1.3.A FLOWCHART FOR DETERMINING APPLICATION OF FLOW CONTROL BMPS

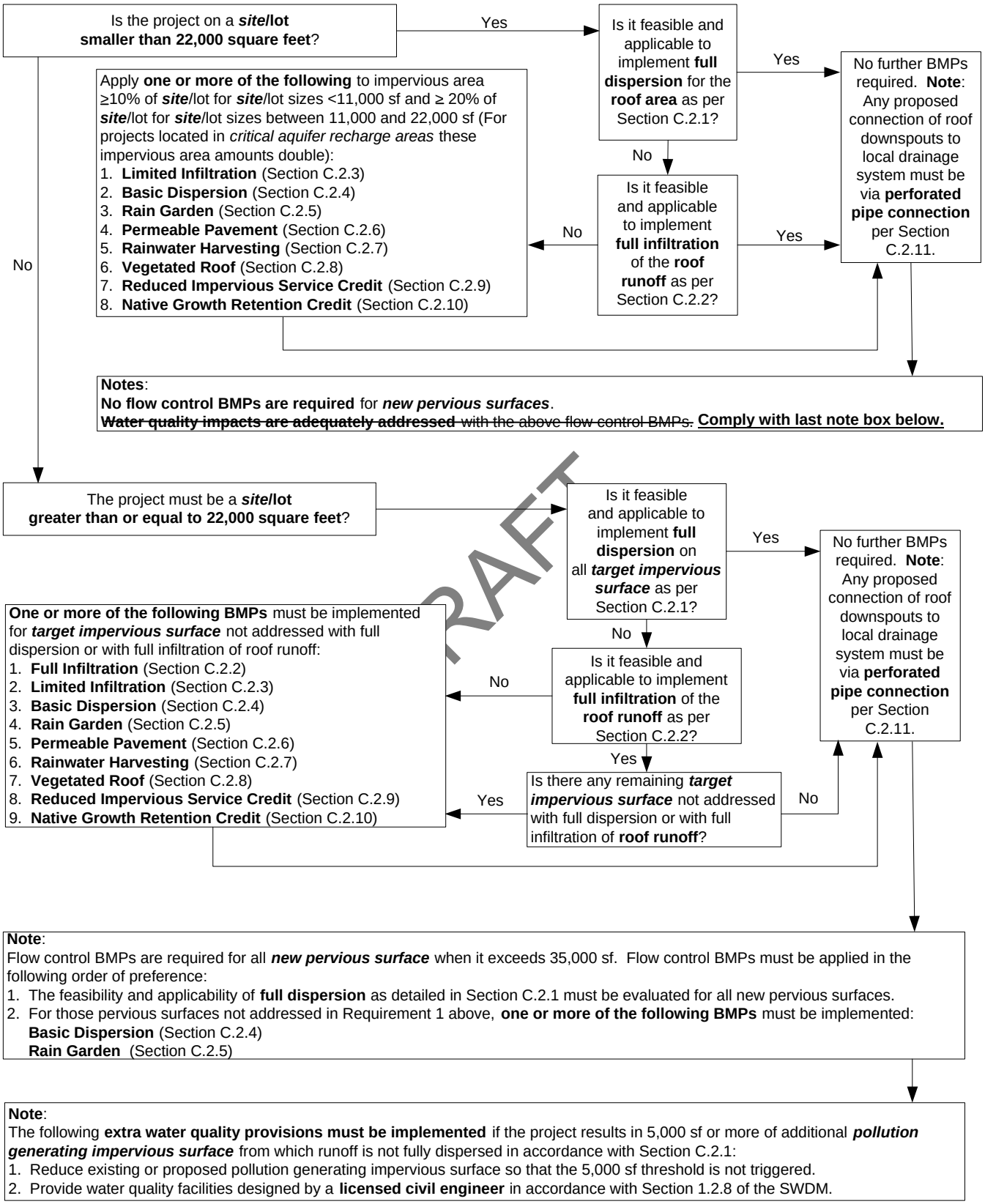

Note:
Flow control BMPs are required for all ***new pervious surface*** when it exceeds 35,000 sf. Flow control BMPs must be applied in the following order of preference:
1. The feasibility and applicability of **full dispersion** as detailed in Section C.2.1 must be evaluated for all new pervious surfaces.
2. For those pervious surfaces not addressed in Requirement 1 above, **one or more of the following BMPs** must be implemented:
   Basic Dispersion (Section C.2.4)
   Rain Garden (Section C.2.5)

Note:
The following **extra water quality provisions must be implemented** if the project results in 5,000 sf or more of additional ***pollution generating impervious surface*** from which runoff is not fully dispersed in accordance with Section C.2.1:
1. Reduce existing or proposed pollution generating impervious surface so that the 5,000 sf threshold is not triggered.
2. Provide water quality facilities designed by a **licensed civil engineer** in accordance with Section 1.2.8 of the SWDM.

C.1.3.3 FLOW CONTROL BMP IMPLEMENTATION REQUIREMENTS

The flow control BMPs required in Section C.1.3.1 or C.1.3.2 above must be implemented in accordance with the following requirements:

1. **Implementation Responsibility.** All flow control BMPs required for the ***site*/lot** must be implemented (installed) by the applicant as part of the proposed project unless they have already implemented as part of a subdivision project (e.g., plat or short plat) that created the lot.

2. **Maintenance Responsibility.** Maintenance of all required flow control BMPs is the responsibility of the owner of the ***site*/lot** served by these BMPs. The responsibility for such maintenance must be clearly assigned to the current and future owners of the ***site*/lot** through a "declaration of covenant and grant of easement" as described in Requirement 3 below.

3. **Declaration of Covenant and Grant of Easement.** A declaration of covenant and grant of easement must be recorded for each ***site*/lot** that contains flow control BMPs. A draft of the proposed covenant must be reviewed and approved by DDES prior to recording. All required covenants must be recorded prior to final construction approval for the proposed project. The covenant in Reference Section C.5.2, p. C-123, (or equivalent) must be used, and is designed to achieve the following:

   a) Provide **notice** to future owners of the presence of flow control BMPs on the lot and the responsibility of the owner to retain, uphold, and protect the flow control BMP devices, features, pathways, limits, and restrictions.

   b) Include as an **exhibit**, a *recordable version*[12] of the following drainage plan information:

      - The **flow control BMP site plan** showing all developed surfaces (impervious and pervious) and the location and dimensions of flow control BMP devices, features, flowpaths (if applicable), and limits of native growth retention areas (if applicable). This plan(s) must be to scale and include ***site*** topography in accordance with the specifications for such plans in Section C.4.2 (p. C-111). *Note: DDES may waive this element if, for example, the only flow control BMP proposed is a limit on impervious surface (reduced footprint).*

      - The **flow control BMP design and maintenance details** for each flow control BMP per Section C.4.3 (p. C-115). This includes a diagram (if applicable) of each flow control BMP device or feature and written maintenance and operation instructions and restrictions for each device, feature, flowpath (if applicable), native growth retention area (if applicable) and impervious surface coverage (if applicable).

   c) Require that each flow control BMP be operated and **maintained at the owner's expense** in accordance with the above exhibit.

   d) Grant King County or its successor the **right to enter** the property at reasonable times for purposes of inspecting the flow control BMPs and to perform any corrective maintenance, repair, restoration, or mitigation work on the flow control BMPs that has not been performed by the property owner within a reasonable time set by DNRP, and to charge the property owner for the cost of any maintenance, repair, restoration, or mitigation work performed by King County.

   e) Prohibit any **modification or removal** of flow control BMPs without written approval from King County. In cases where the modification or removal is done under a King County development permit, the approval must be obtained from DDES (or its successor) and a covenant must be recorded to reflect the changes. In all other cases, the approval must be obtained from DNRP (or its successor) and a covenant must be recorded to reflect the changes. Approval will be granted only if equivalent protection in terms of hydrologic performance is provided by other means.

DRAFT

[12] *Recordable version* means one that meets King County's "Standard Formatting Requirements for Recording Documents" pursuant to RCW 36.18.010 and 65.04.045, available online at ftp://ftp.metrokc.gov/records/formatting_requirements.pdf or from the King County Recorder's Office. These requirements include specifications for such things as page size ($8^1/_2$" x 14" or smaller), font size (at least 8-point), and margin width (1" on all sides of every page if there is a standard cover sheet).

4. **Timing of Implementation.** All required flow control BMPs must be installed prior to final inspection approval of constructed improvements. For BMPs that rely on vegetation, the vegetation must be planted and starting to grow prior to final construction approval.

5. **Acceptance Standards.** Flow control BMPs may be inspected during and/or following construction. Approval of the constructed BMPs will be based on verification that the materials and placement appear to meet the specifications and that the BMPs appear to function as designed. Onsite observations may be used to verify that materials are as specified and material receipts checked. Performance may be evaluated by a ***site*** visit while it is raining or by testing with a bucket of water or garden hose to check pavement permeability or proper connection to BMP devices/features, etc.

6. **Drainage Concerns.** If DDES determines that there is a potential for drainage impacts to a neighboring property or critical area, then additional measures may be required. Some flow control BMPs may not be appropriate in certain situations, and will not be allowed by DDES where they may cause drainage problems.

7. **Geotechnical Concerns.** A ***geotechnical engineer***, ***engineering geologist***, or DDES staff geologist must evaluate flow control BMPs proposed on slopes steeper than 15%. In addition, DDES may require review by a ***geotechnical engineer*** or ***engineering geologist*** of any proposed BMP within 50 feet of a slope steeper than 15%. DDES may also require some projects to route flows down or around such slopes using non-perforated pipes. Some flow control BMPs may not be appropriate for these locations, and will not be allowed by DDES where flows may cause erosion problems.

8. **Sewage System Concerns.** If DDES determines that there is a potential conflict between onsite sewage systems and flow control BMPs, additional measures may be required. Some projects may need to route flows past onsite sewage systems using non-perforated pipes. Also, some flow control BMPs may not be appropriate for these ***sites***, and will not be allowed where sewage systems may be impacted.

9. **Engineering Concerns.** While most of the flow control BMPs in this appendix can be implemented by a non-engineer, there are some that have structural components that must be designed or evaluated by a ***civil engineer*** or *structural engineer*.[13] When a BMP is proposed that has such components as identified in Section C.2, DDES may require submittal of engineering plans for that component signed and stamped by a ***civil engineer*** or structural engineer.

10. **Connection to Subsurface Drains.** Flow control BMPs **should not** be connected to subsurface drains (e.g., footing drains) as these connections may adversely affect the performance of the BMPs, and in some cases may cause reverse flow into the footing drains during storm events.

11. **Small Project Drainage Plan**. The type, size, and placement of proposed flow control BMPs are to be shown on the **flow control BMP site plan** portion of the small project drainage plan submitted for the proposed project. This plan must be in accordance with the specifications for such plans outlined in Section C.4 (p. C-109) unless otherwise directed by DDES.

DRAFT

[13] *Structural engineer* means a person licensed by the State of Washington as a professional civil engineer specializing in structural engineering.

C.1.4 APPLICATION OF ESC MEASURES

It is the responsibility of both the applicant and contractor to prevent the erosion and transport of sediment and other construction-related pollutants to the maximum extent practicable. Erosion and sediment control (ESC) measures must be used both during and after construction as specified in this section.

~~ESC measures used during construction are referred to as temporary ESC measures. Examples of temporary ESC measures include the use of mulches or other cover materials, marked/minimized clearing limits, and routing of water around exposed soils. Installation and maintenance of silt fencing is an example of sediment trapping. ESC measures used after construction are referred to as permanent or final stabilization measures. Examples of permanent ESC measures include landscaping, mulching, and seeding.~~

For projects subject to Small Project Drainage Review and disturbing less than 1 acre of land, the application of ESC measures must be in accordance with the "Small Site ESC Requirements" in Section C.1.4.1 and the "ESC Implementation Requirements" in Section C.1.4.2. The ESC Small Site Requirements specify the types of measures that must be considered for application to the construction site based on project-specific ***site*** features, soil conditions, weather conditions, time of year, and construction activities. The ESC implementation requirements are generally applicable to all small projects disturbing less than 1 acre.

C.1.4.1 SMALL SITE ESC REQUIREMENTS

For projects in Small Project Drainage Review that disturb less than 1 acre of land, all of the following small site ESC requirements must be evaluated for applicability to the proposed project:

DRAFT

A. MARK CLEARING LIMITS/MINIMIZE CLEARING

Prior to beginning land disturbing activities, all clearing limits, sensitive areas and their buffers, and trees that are to be preserved within the construction area shall be clearly marked, both in the field and on the small site ESC plan, to prevent damage and offsite impacts. Also, clearing shall be minimized to the maximum extent practicable. See "**Mark Clearing Limits/Minimize Clearing**~~**Mark Clearing Limits/Minimize Clearing**~~," Section C.3.5, for more detailed specifications.

B. MINIMIZE SEDIMENT TRACKED OFFSITE

1. Establish a stabilized entrance for construction vehicle access to minimize the tracking of sediment onto public roads. Entrance and exit shall be limited to one route, if possible. See "**Stabilized Construction Entrance**~~**Stabilized Construction Entrance**~~," Section C.3.1, for detailed specifications.

2. If sediment is tracked offsite, public roads shall be cleaned thoroughly at the end of each day, or more frequently during wet weather, if necessary to prevent sediment from entering waters of the state. Sediment shall be removed from roads by shoveling or pickup sweeping and shall be transported to a controlled sediment disposal area. Street washing will be allowed only after sediment is removed in this manner. Street wash wastewater shall be controlled by pumping back onsite, or otherwise be prevented from discharging into drainage systems tributary to surface waters. This requirement **shall be included as a note** on the small site ESC plan.

C. CONTROL SEDIMENT

Runoff from disturbed areas must pass through a sediment control measure to prevent the transport of sediment downstream until the disturbed area is fully stabilized. Sediment controls must be installed as one of the first steps in grading and shall be functional before other land disturbing activities take place. One or more the following sediment controls may be used to meet this requirement:

- **Silt Fence**~~**Silt Fence**~~ (See Section C.3.6)

- **Vegetated Strip~~Vegetated Strip~~** (See Section C.3.7)
- **Triangular Silt Dike~~Triangular Silt Dike~~** (See Section C.3.8)
- **Storm Drain Inlet Protection~~Storm Drain Inlet Protection~~** (See Section C.3.9)

D. STABILIZE EXPOSED SOILS

All exposed and unworked soils shall be stabilized through the application of **cover measures** to protect the soil from the erosive forces of raindrop impact, flowing water, and wind erosion. One or more of the following **cover measures** may be used to meet this requirement during the construction phase:

- **Mulching~~Mulching~~** (See Section C.3.2)
- **Plastic Covering~~Plastic Covering~~** (See Section C.3.4)
- **Nets and Blankets~~Nets and Blankets~~** (See Section C.3.3)
- **Seeding~~Seeding~~** (See Section C.3.10)
- **Sodding~~Sodding~~** (See Section C.3.11)

Cover measures shall be **applied in accordance with the following requirements**:

1. Cover measures must be installed if an area is to remain unworked for more than seven days during the dry season (May 1 to September 30) or for more than two consecutive working days during the wet season (October 1 to April 30). These time limits may be relaxed if an area poses a low risk of erosion due to soil type, slope gradient, anticipated weather conditions, or other factors. Conversely, the County may reduce these time limits if site conditions warrant greater protection (e.g., adjacent to significant aquatic resources or highly erosive soils) or if significant precipitation is expected.
2. Any area to remain unworked for more than 30 days shall be seeded or sodded unless the County determines that winter weather makes vegetation establishment infeasible. During the wet season, exposed ground slopes and stockpile slopes with an incline of 3 horizontal to 1 vertical (3H:1V) or steeper and with more than ten feet of vertical relief shall be covered if they are to remain unworked for more than 12 hours. Also during the wet season, the material necessary to cover all disturbed areas must be stockpiled on site. The intent of these cover requirements is to have as much area as possible covered during any period of precipitation.

DRAFT

E. CONTROL RUNOFF

Stormwater runoff originating on the ***site*** and/or entering the ***site*** from offsite areas must be controlled so as to minimize erosion of disturbed areas and exposed cut and fill slopes. The following runoff control measures shall be used as needed per the conditions of use and specifications for each measure:

- **Interceptor Dikes and Swales~~Interceptor Dikes and Swales~~** (see Section C.3.12 for conditions of use and specifications)
- **Ditches~~Ditches~~** (see Section C.3.13 for conditions of use and specifications)
- **Pipe Slope Drain~~Pipe Slope Drain~~** (see Section C.3.14 for conditions of use and specifications)

F. CONTROL DEWATERING

Accumulated water in foundation areas, excavations, and utility trenches shall be removed and disposed of in a manner that does not pollute surface waters or cause downstream erosion or flooding. See "**Dewatering Control~~Dewatering Control~~**," Section C.3.15 for detailed specifications.

G. CONTROL OTHER POLLUTANTS

All construction activities shall be done in a manner that prevents pollution of surface waters and ground waters as specified in the King County's *Stormwater Pollution Prevention Manual (SPPM)*. See "**Control**

of Other Pollutants~~**Control of Other Pollutants**~~," Section C.3.16, for specific measures and references to applicable activity sheets in the *SPPM*. References to applicable activity sheets in *SPPM* shall be included in the small site ESC plan.

H. FINAL STABILIZATION

1. Prior to final construction approval, the ***project site*** shall be stabilized to prevent sediment-laden water from leaving the ***project site*** after project completion. All disturbed areas of the ***project site*** shall be vegetated or otherwise permanently stabilized. At a minimum, disturbed areas must be seeded and mulched to ensure that sufficient cover will develop shortly after final approval. Mulch without seeding is adequate for small areas to be landscaped before October 1.
2. All temporary ESC measures shall be removed within 30 days after final site stabilization is achieved or after the temporary measures are no longer needed. Trapped sediment shall be removed or stabilized onsite. Disturbed soil areas resulting from removal of measures or vegetation shall be permanently stabilized with seeding or sodding.

C.1.4.2 ESC IMPLEMENTATION REQUIREMENTS

Projects in Small Project Drainage Review that disturb less than 1 acre of land must ~~apply~~ implement the ESC measures determined necessary in Section C.1.4.1 in accordance with the following requirements:

~~1. The measures detailed in Section C.3.1, "Temporary ESC" (p. C-79), must be applied as needed **during construction** to minimize the amount of sediment mobilized and trap any mobilized sediment before it leaves the disturbed portion of the ***site***.~~

~~2. The measures detailed in Section C.3.2, "Final Stabilization" (p. C-90), must be applied **after construction** to stabilize disturbed areas against further erosion.~~

~~3.~~1. The placement and type of proposed ESC measures are to be shown on the **small site ESC plan** portion of the small project drainage plan submitted for the proposed project. This plan must be in accordance with the specifications for such plans outlined in Section C.4 (p. C-109) unless otherwise directed by DDES.

~~4.~~2. If DDES finds that implementation of the proposed small site **ESC plan is insufficient** to prevent the ~~transport~~ discharge of sediment or other pollutants to the maximum extent practicable, additional measures will be required by DDES. In some cases, an ESC plan or a complete Construction Stormwater Pollution Plan prepared by a ***civil engineer*** per Chapter 2 of the *SWDM* may be required.

~~5.~~3. The contractor or other persons performing construction activities shall comply with the **storm**water ~~**quality source control**~~**pollution prevention measures/BMPs** specified for such activities in the King County *Stormwater Pollution Prevention Manual*. A note to this effect must be put on the approved ESC plan.

~~6.~~4. Prior to commencing construction, the applicant must identify to the County a **contact person** responsible for overseeing the installation and maintenance of required ESC measures and compliance with the *Stormwater Pollution Prevention Manual* during construction. The name and contact information for this person must be on or attached to small site ESC plan at the time of construction.

~~7.~~5. Both the **applicant and contractor are responsible** for implementation and maintenance of the approved small site ESC plan and any additional measures required by the County.

6. The **small site ESC plan shall be retained onsite** or within reasonable access to the site. The plan shall be modified whenever there is a significant change in the design, construction, operation, or maintenance at the construction site that has, or could have, a significant effect on the discharge of pollutants to surface waters. The plan shall be modified, if during inspections or investigations conducted by the County, it is determined that the plan is ineffective in eliminating or significantly minimizing pollutants in stormwater discharges from the site. The plan shall be modified as necessary to include additional or modified measures designed to correct problems identified.

DRAFT

DRAFT

C.1.5 SMALL PROJECT SUBMITTAL REQUIREMENTS

For projects in Small Project Drainage Review, the items listed below must be submitted to DDES for review unless the item is not applicable or necessary as specified for that item below or as determined by DDES. See Section C.5.1 (p. C-119) for a description of the DDES permit review process for Small Project Drainage Review.

1. A **small project drainage plan**, which includes the components specified in Section C.4 (p. C-109) unless otherwise directed by DDES. These components vary depending on whether the project is an individual lot development or a subdivision. For most projects in Small Project Drainage Review (i.e., individual lot projects), the required components of a small project drainage plan include a flow control BMP site plan, flow control BMP design and maintenance details, a small site ESC plan, and a written drainage assessment with supporting documentation (e.g., soils report, special studies, etc). *Note: small project subdivisions that do not require engineering plans or analysis will typically be asked to complete small project drainage plans prior to preliminary approval of the subdivision. Projects submitting small project drainage plans after preliminary approval must include in the written assessment a discussion of any changes made to the project after preliminary approval.*

2. A draft of the **declaration of covenant and grant of easement** required to be recorded for application of flow control BMPs on an individual ***site*/lot** in accordance with Requirement 3 of Section C.1.3.3.

3. A copy of any **recorded covenant** that limits the amount of impervious surface or clearing on the ***site*** for purposes of qualifying for Small Project Drainage Review. If one does not exist or does not include provisions for County inspection, it must be combined with the covenant required for application of flow control BMPs.

4. An **engineering plan** and **technical information report** signed and stamped by a ***civil engineer*** if needed to address targeted drainage review requirements identified in Section C.1.1 and described in Section C.1.2. The specifications for such plans and reports are found in Chapter 2 of the *SWDM*.

DRAFT

DRAFT

C.2 FLOW CONTROL BMPs

This section presents the minimum design requirements and specifications for each type of flow control BMP. *Flow control BMPs* are methods and designs for dispersing, infiltrating, or otherwise reducing or preventing development-related increases in runoff at or near the sources of those increases. Flow control BMPs include, but are not limited to, preservation and use of ***native vegetated surface*** to fully disperse runoff; use of other pervious surfaces to disperse runoff; roof downspout infiltration; permeable pavements; rainwater harvesting; vegetated roofs; and reduction of development footprint.

Intent of Flow Control BMPs

The primary intent of flow control BMPs is to mitigate the hydrologic impacts of impervious surface, which means preventing or reducing the increased runoff peaks, volumes, and loss of groundwater recharge associated with conversion of forest or grassland to impervious surface. Such impacts are known to cause or contribute to downstream flooding, erosion, sedimentation, loss of aquatic habitat, and loss of groundwater available for human consumption and summer stream flows necessary for fish use.

The secondary intent of flow control BMPs is to mitigate the water quality impacts of impervious surface and in some cases, ***new pervious surface***, where the ***new pervious surface*** exceeds 35,000 square feet.

Some flow control BMPs are more effective than others at minimizing hydrologic impacts and are given preference in the BMP application requirements. For example, where substantial amounts of native vegetation are being retained onsite, "full dispersion" of runoff is the preferred or required BMP if it can be implemented onsite per the minimum design requirements and specifications in Section C.2.1 (p. C-26).

DRAFT

Organization of Section C.2

Section C.2 is organized as follows:

- Section C.2.1, "Full Dispersion" (p. C-26)
- Section C.2.2, "Full Infiltration" (p. C-40)
- Section C.2.3, "Limited Infiltration" (p. C-48)
- Section C.2.4, "Basic Dispersion" (p. C-50)
- Section C.2.5, "Rain Garden" (p. C-58)
- Section C.2.6, "Permeable Pavement" (p. C-63)
- Section C.2.7, "Rainwater Harvesting" (p. C-67)
- Section C.2.8, "Vegetated Roof" (p. C-70)
- Section C.2.9, "Reduced Impervious Surface Credit" (p. C-73)
- Section C.2.10, "Native Growth Retention Credit" (p. C-77)
- Section C.2.11, "Perforated Pipe Connection" (p. C-79)

Other Resources

Other resources are available that may be helpful in the design of flow control BMPs. The state Department of Ecology *Stormwater Management Manual for Western Washington* (August 2001) and the Puget Sound Water Quality Action Team's *Low Impact Development Technical Guidance Manual for Puget Sound* (January 2005) are both good references and sources of ideas. For many of the above BMPs, these manuals may provide much more design information than is presented in this appendix. Where such information conflicts with the minimum design requirements and specifications contained herein, King County's standards shall govern.

C.2.1 FULL DISPERSION

Full dispersion is a BMP strategy for minimizing the area of onsite developed surface (i.e., impervious or non-native pervious surface) relative to ***native vegetated surface*** (e.g., forested surface) together with the application of dispersion techniques that utilize the natural capacity of the ***native vegetated surface*** to mitigate the runoff quantity and quality impacts of the developed surfaces. Developed surfaces that meet the minimum requirements and specifications for full dispersion as set forth in this section are referred to as *fully dispersed surfaces*. As specified in the *SWDM*, fully dispersed impervious surface is not subject to the "flow control facility requirement." Similarly, any ***pollution-generating impervious surface*** or pervious surface that is fully dispersed is not subject to the water quality facility requirements of the *SWDM*.

Applicable Surfaces

Full dispersion may be applied to any impervious surface such as a roof, driveway, parking area, or road, and to any non-native pervious surface such as a lawn, landscaped area, or pasture.

Operation and Maintenance

See Section C.2.1.9 (p. C-39).

C.2.1.1 MINIMUM DESIGN REQUIREMENTS FOR FULL DISPERSION

DRAFT

All of the following requirements must be met in order for full dispersion to be feasible and applicable to a ***target impervious surface*** or ***new pervious surface***:

1. The **total area of impervious surface** being fully dispersed must be no more than 15% of the total area of ***native vegetated surface*** being preserved by a clearing limit per KCC 16.82 or by a recorded tract, easement, or covenant on the ***site***. This area of ***native vegetated surface*** must be delineated on the ***site*** as specified in and subject to the restrictions in Section C.2.1.2. The total area of impervious surface plus *non-native pervious surface*[14] being fully dispersed must be no more than 35% of the ***site***. *Note: for **sites** that span the divide between two or more stream basins, DDES may require that these percentages be applied by "threshold discharge area" as defined in the Surface Water Design Manual.*
2. The runoff from a fully dispersed surface must be discharged using one of the following **dispersion devices** in accordance with the design specifications and maximum area of fully dispersed surface for each device as set forth in Sections C.2.1.3 through C.2.1.6:
   - Splash blocks (see Section C.2.1.3, p. C-28)
   - Rock pads (see Section C.2.1.4, p. C-28)
   - Gravel filled trenches (see Section C.2.1.5, p. C-29)
   - Sheet flow (see Section C.2.1.6, p. C-30)
3. A **native vegetated flowpath segment** of at least 100 feet in length (25 feet for sheet flow from a non-native pervious surface) must be available along the flowpath that runoff would follow upon discharge from a dispersion device listed in Minimum Requirement 2 above. The native vegetated flowpath segment **must meet all of the following criteria:**
   a) The flowpath segment must be over ***native vegetated surface***.
   b) The flowpath segment must be **onsite** or in an **offsite tract or easement area** reserved for such dispersion.

[14] *Non-native pervious surface* means a pervious surface that does not meet the definition of a ***native vegetated surface*** and is not a natural water body or critical area.

c) The **slope** of the flowpath segment must be no steeper than 15% for any 20-foot reach of the flowpath segment.

d) The flowpath segment must be located between the dispersion device and any **downstream drainage feature** such as a pipe, ditch, stream, river, pond, lake, or wetland.

e) The flowpath segments for adjacent dispersion devices must be sufficiently spaced in order to prevent overlap of flows in the segment areas. The **minimum spacing** between flowpath segments is specified for each dispersion device in subsequent sections, and includes an exception made in cases where sheet flow from a non-native pervious surface overlaps with other flowpath segments.

4. For ***sites*** with **septic systems**, the discharge of runoff from dispersion devices must be located down slope of the primary and reserve drainfield areas. DDES permit review staff can waive this requirement if site topography clearly prohibits discharged flows from intersecting the drainfield.

5. Dispersion devices are not allowed in critical area **buffers** (unless approved by DDES) or on **slopes** steeper than 20%. Dispersion devices proposed on slopes steeper than 15% or within 50 feet of a ***steep slope hazard area*** or ***landslide hazard area*** must be approved by a ***geotechnical engineer*** or ***engineering geologist*** unless otherwise approved by the DDES staff geologist.

6. The dispersion of runoff must not create **flooding or erosion impacts** as determined by the DDES. If runoff is discharged toward a ***landslide hazard area***, ***erosion hazard area***, ***steep slope hazard area***, or any slope steeper than 15%, DDES may require evaluation and approval of the proposal by a ***geotechnical engineer*** or ***engineering geologist***.

DRAFT

C.2.1.2 DELINEATION OF NATIVE VEGETATED AREA FOR FULL DISPERSION

The area of ***native vegetated surface*** used for full dispersion must be delineated as a "**native growth retention area**" on the flow control BMP site plan that will be attached to the required declaration of covenant and grant of easement per Requirement 3 of Section C.1.3.3. Delineation of the native growth retention area is subject to the following **restrictions:**

1. The principle restriction on native growth retention areas is **removal of vegetation and trees**. All trees within the native growth retention area at the time of permit application shall be retained, aside from approved timber harvest activities and the removal of dangerous and diseased trees.

2. The native growth retention area may include any *unsubmerged*[15] critical areas and any critical area buffers.

3. The native growth retention area may include previously cleared areas replanted by the proposed project in accordance with the **native vegetated landscape** specifications in Section C.2.1.8 (p. C-37).

4. The native growth retention area **may be used for passive recreation** and related facilities, including pedestrian and bicycle trails, nature viewing areas, fishing and camping areas, and other similar activities that do not require permanent structures, provided that cleared areas and areas of compacted soil associated with these areas and facilities do not exceed eight percent of the native growth retention area.

5. The native growth retention area **may contain utilities and utility easements**, including other flow control BMPs, but not septic systems.

Note: the Public Benefit Rating System (PBRS) provides tax credit for properties that preserve 4 acres or more of contiguous open space in rural areas. Additional credits are granted under the forested open space category, provided a Forest Management Plan is developed that maintains the open space in a fully forested condition.

[15] *Unsubmerged* means outside the ordinary high water mark of streams, lakes, and wetlands.

C.2.1.3 USE OF SPLASH BLOCKS FOR FULL DISPERSION

Splash blocks such as that shown in Figure C.2.1.A (p. C-32) may be used to disperse the runoff collected from small amounts of roof area and discharged via a downspout.

Design Specifications

1. No more than 700 square feet of roof area may be drained to a single splash block unless the native vegetated flowpath segment is longer than the 100-foot minimum length specified in Minimum Requirement 3 of Section C.2.1.1.
2. A maximum roof area of 1,400 square feet may be discharged to a single splash block if the native vegetated flowpath segment is at least 200 feet in length. *Note: for roof areas larger than 700 square feet, the splash block should be located away from building or other provisions should be made to prevent flooding/erosion problems.*
3. For roof areas of between 700 square feet and 1,400 square feet, the length of the flowpath segment may vary proportionally between 100 and 200 feet.
4. For purposes of maintaining adequate separation of flows discharged from adjacent dispersion devices, the native vegetated flowpath segment for the splash block must have at least 50 feet of separation from an adjacent flowpath segment at the downstream end of whichever segment is the shorter. **Exception:** where sheet flow from a non-native pervious surface overlaps with the flowpath of a splash block, the splash block flowpath segment must be extended at least 1 foot for every 3 feet of non-native pervious surface area **width** draining to the same flowpath. *Note that width is measured in the general direction that runoff flows across the non-native pervious surface.*

DRAFT

C.2.1.4 USE OF ROCK PADS FOR FULL DISPERSION

Pads of crushed rock, 2 feet wide (perpendicular to flow) by 3 feet long by 6 inches deep, may be used as a dispersion device to discharge small amounts of concentrated runoff from impervious surface or non-native pervious surface.

Design Specifications

1. No more than 700 square feet of impervious surface may be drained to a single rock pad unless the native vegetated flowpath segment is longer than the 100-foot minimum length specified in Minimum Requirement 3 of Section C.2.1.1 above. If the developed surface is non-native pervious surface other than pasture, no more than 2,500 square feet may be drained to a single rock pad with a 100-foot native vegetated flowpath segment. For pasture, the maximum is 8,000 square feet. Combinations of different surfaces draining to a single rock pad are allowed provided that the sum of each surface area divided by its maximum (e.g., impervious area divided by 700) is less than or equal to 1.0.
2. A maximum impervious surface area of 1,400 square feet may be drained to a single rock pad if the native vegetated flowpath segment is at least 200 feet in length. For non-native pervious surface other than pasture, the maximum area is 5,000 square feet. For pasture, the maximum is 16,000 square feet. Again, combinations of different surfaces are allowed as explained in Item 1 above.
3. For impervious surface areas of between 700 and 1,400 square feet, the length of the flowpath segment may vary proportionally between 100 and 200 feet. This variation is also allowed for non-native pervious surfaces (i.e., between 2,500 and 5,000 square feet for surfaces other than pasture, and between 8,000 and 16,000 square feet for pasture).
4. For purposes of maintaining adequate separation of flows discharged from adjacent dispersion devices, the native vegetated flowpath segment for the rock pad must have at least 50 feet of separation from an adjacent flowpath segment at the downstream end of whichever segment is the shorter. **Exception:** where sheet flow from a non-native pervious surface overlaps with the flowpath

of a rock pad, the rock pad flowpath segment must be extended at least 1 foot for every 3 feet of non-native pervious surface area **width** draining to the same flowpath. *Note that width is measured in the general direction that runoff flows across the non-native pervious surface.*

C.2.1.5 USE OF GRAVEL FILLED TRENCHES FOR FULL DISPERSION

Either of the two types of gravel filled trenches (also called "**dispersion trenches**") shown in Figure C.2.1.C (p. C-34) and Figure C.2.1.D (p. C-35) may be used as a dispersion device to spread the discharge of concentrated runoff from any type of developed surface.

General Design Specifications

1. All trenches are filled with $^{3}/_{4}$-inch to $1^{1}/_{2}$-inch washed rock.
2. All trenches must be placed at least 10 feet from any building and must be as parallel as possible to the contour of the ground.
3. For purposes of maintaining adequate separation of flows discharged from adjacent dispersion devices, the outer edge of the native vegetated flowpath segment for the dispersion trench must have at least 50 feet of separation from an adjacent flowpath segment at the downstream end of whichever segment is the shorter. **Exception:** where sheet flow from a non-native pervious surface overlaps with the flowpath of a dispersion trench, the dispersion trench flowpath segment must be extended at least 1 foot for every 3 feet of non-native pervious surface area **width** draining to the same flowpath. *Note that width is measured in the general direction that runoff flows across the non-native pervious surface.*

Design Specifications for Simple 10-Foot Trench (Full Dispersion)

1. The simple 10-foot-long trench illustrated in Figure C.2.1.B (p. C-33) and Figure C.2.1.C (p. C-34) must be at least 2-feet-wide by 18-inches deep.
2. The 10-foot trench length is the maximum allowed without a notch grade board as shown in Figure C.2.1.D (p. C-35).
3. No more than 1,400 square feet of impervious area may be drained to a single 10-foot trench unless the native vegetated flowpath segment is longer than the 100-foot minimum length specified in Minimum Requirement 3 of Section C.2.1.1 above. If the developed surface is non-native pervious surface other than pasture, no more than 5,000 square feet may be drained to a single 10-foot trench with a 100-foot native vegetated flowpath segment. For pasture, the maximum is 16,000 square feet. Combinations of different surfaces draining to a single 10-foot trench are allowed provided that the sum of each surface area divided by its maximum (e.g., impervious area divided by 1,400) is less than or equal to 1.0.
4. A maximum impervious surface area of 2,800 square feet may be drained to a single 10-foot trench if the native vegetated flowpath segment is at least 200 feet in length. For non-native pervious surface other than pasture, the maximum area is 10,000 square feet. For pasture, the maximum is 32,000 square feet. Again, combinations of different surfaces are allowed as explained in Item 3 above.
5. For impervious surface areas of between 1,400 and 2,800 square feet, the length of the flowpath segment may vary proportionally between 100 and 200 feet. This variation is also allowed for non-native pervious surfaces (i.e., between 5,000 and 10,000 square feet for surfaces other than pasture, and between 16,000 and 32,000 square feet for pasture).

Design Specifications for 50-Foot Trench with Notch Board (Full Dispersion)

1. The 50-foot-long trench with notch grade board detailed in Figure C.2.1.D (p. C-35) must be at least 2-feet wide by 24-inches deep.
2. The 50-foot trench length is the longest allowed.

DRAFT

3. No more than 5,000 square feet of impervious area may be drained to a single 50-foot trench unless the native vegetated flowpath segment is longer than the 100-foot minimum length specified in Minimum Requirement 3 of Section C.2.1.1 above. If the developed surface is non-native pervious surface other than pasture, no more than 17,500 square feet may be drained to a single 50-foot trench with a 100-foot native vegetated flowpath segment. For pasture, the maximum is 1.25 acres (54,450 square feet). Combinations of different surfaces draining to a single 50-foot trench are allowed provided that the sum of each surface area divided by its maximum (e.g., impervious area divided by 5,000) is less than or equal to 1.0.
4. A maximum impervious surface area of 10,000 square feet may be drained to a single 50-foot trench if the native vegetated flowpath segment is at least 200 feet in length. For non-native pervious surface other than pasture, the maximum area is 35,000 square feet. For pasture, the maximum is 2.5 acres (108,900 square feet). Again, combinations of different surfaces are allowed as explained in Item 3 above.
5. For between 5,000 square feet and 10,000 square feet of impervious area, the length of the flowpath segment may vary proportionally between 100 and 200 feet for a 50-foot trench. The trench length may also vary proportionally between the 10-foot trench values above and the 50-foot values given here. For impervious surface areas of between 5,000 and 10,000 square feet, the length of the flowpath segment may vary proportionally between 100 and 200 feet. This variation is also allowed for non-native pervious surfaces (i.e., between 17,500 and 35,000 square feet for surfaces other than pasture, and between 1.25 and 2.5 acres for pasture).
6. Manifolds may be used to split flows between up to four 50-foot trenches.

C.2.1.6 USE OF SHEET FLOW FOR FULL DISPERSION

DRAFT

Sheet flow, as a dispersion device, is the grading of a developed surface (either a strip of impervious surface or a patch of non-native pervious surface) as needed to avoid the concentration of runoff before and after discharge from the surface. Two types of sheet flow, one for impervious surface and one for pervious surface, are detailed below.

Design Specifications for Impervious Surface Sheet Flow (Full Dispersion)

1. The strip of impervious surface may be either roof (with no gutter) or pavement. The edge of the impervious strip and the ground adjacent to or immediately below the edge must be level or sloped no more than 5% along the edge as shown in Figure C.2.1.E (p. C-36).
2. A 2-foot-wide, 4-to-6 inch-deep, strip of crushed rock or the extended base course of a road or driveway must be provided at or below the edge of the impervious strip to facilitate dispersal of runoff.
3. No more than a 25-foot-wide strip of impervious surface may be sheet flowed in this manner unless the native vegetated flowpath segment is longer than the 100-foot minimum length specified in Minimum Requirement 3 of Section C.2.1.1 above.
4. A maximum 50-foot-wide strip may be sheet flowed if the flowpath segment is at least 200 feet in length.
5. For strip widths of between 25 and 50 feet, the length of the flowpath segment may vary proportionally between 100 and 200 feet in length.
6. For purposes of maintaining adequate separation of flows discharged from adjacent dispersion devices, the outer edge of the native vegetated flowpath segment for the strip of impervious surface must have at least 50 feet of separation from an adjacent flowpath segment at the downstream end of whichever segment is the shorter. **Exception:** where sheet flow from a non-native pervious surface overlaps with the flowpath for sheet flow from an impervious surface, the impervious surface flowpath segment must be extended at least 1 foot for every 3 feet of non-native pervious surface area

width draining to the same flowpath. *Note that width is measured in the general direction that runoff flows across the non-native pervious surface.*

Design Specifications for Pervious Surface Sheet Flow (Full Dispersion)

1. The area of non-native pervious surface being dispersed by sheet flow must have a *width*[16] of no more than 25 feet unless the native vegetated flowpath segment is longer than the 25-foot minimum length specified in Minimum Requirement 3 of Section C.2.1.1 above.
2. If the width of the non-native pervious surface is greater than 25 feet, the vegetated flowpath segment must be extended 1 foot for every 3 feet of width beyond 25 feet up to a maximum width of 250 feet.
3. The topography of the non-native pervious surface must be such that runoff will not concentrate prior to discharge from surface.
4. The vegetated flowpath segment for sheet flow from non-native pervious surface may overlap with the flowpath segments for other dispersion devices provided adjustments are made to the length of those segments as specified in the design specifications for each dispersion device.

C.2.1.7 FULL DISPERSION FIGURES AND SUMMARY INFORMATION

This section contains the figures referenced in the preceding sections for details on full dispersion devices and includes a useful summary table of the flowpath lengths and capacities of the dispersion devices.

TABLE C.2.1.A SUMMARY OF DISPERSION DEVICE FLOWPATH LENGTHS & CAPACITIES

Full Dispersion Device	Native Vegetated Flowpath Length	Maximum Impervious Surface Amount	Maximum Non-Native Pervious Surface Amount	
			Non-Pasture	Pasture
Splash Block	100 feet	700 sq ft	NA	NA
	200 feet	1,400 sq ft	NA	NA
Rock Pad	100 feet	700 sq ft	2,500 sq ft	8,000 sq ft
	200 feet	1,400 sq ft	5,000 sq ft	16,000 sq ft
10-foot Gravel Trench	100 feet	1,400 sq ft	5,000 sq ft	16,000 sq ft
	200 feet	2,800 sq ft	10,000 sq ft	32,000 sq ft
50-foot Gravel Trench	100 feet	5,000 sq ft	17,500 sq ft	54,450 sq ft
	200 feet	10,000 sq ft	35,000 sq ft	108,900 sq ft
Sheet Flow from Impervious Surface	100 feet	25-ft strip width	NA	NA
	200 feet	50-ft strip width	NA	NA
Sheet Flow from Non-Native Pervious Surface	25 feet	NA	25 feet of width in direction of flow	
	50 feet	NA	100 feet of width in direction of flow	
	75 feet	NA	175 feet of width in direction of flow	
	100 feet	NA	250 feet of width in direction of flow	

DRAFT

[16] *Width* is measured in the general direction that runoff flows across the area of non-native pervious surface. For irregular-shaped areas, the width may be an average of distances along multiple paths of runoff across the non-native pervious surface.

FIGURE C.2.1.A TYPICAL SPLASH BLOCK

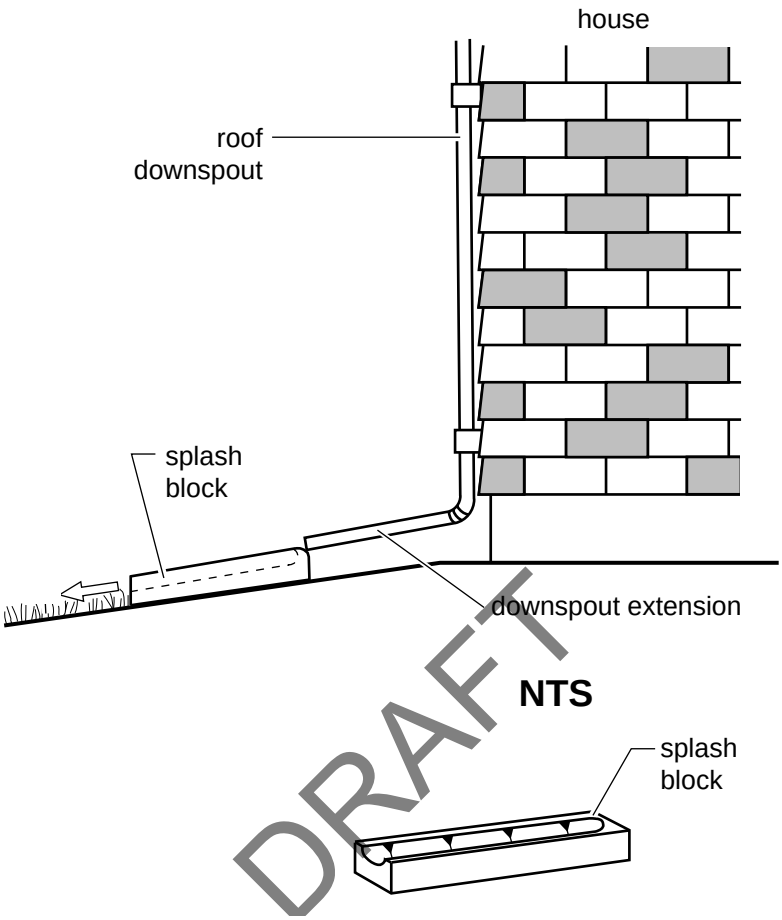

DRAFT

FIGURE C.2.1.B DRIVEWAY APPLICATION OF DISPERSION TRENCH AND ROCK PAD

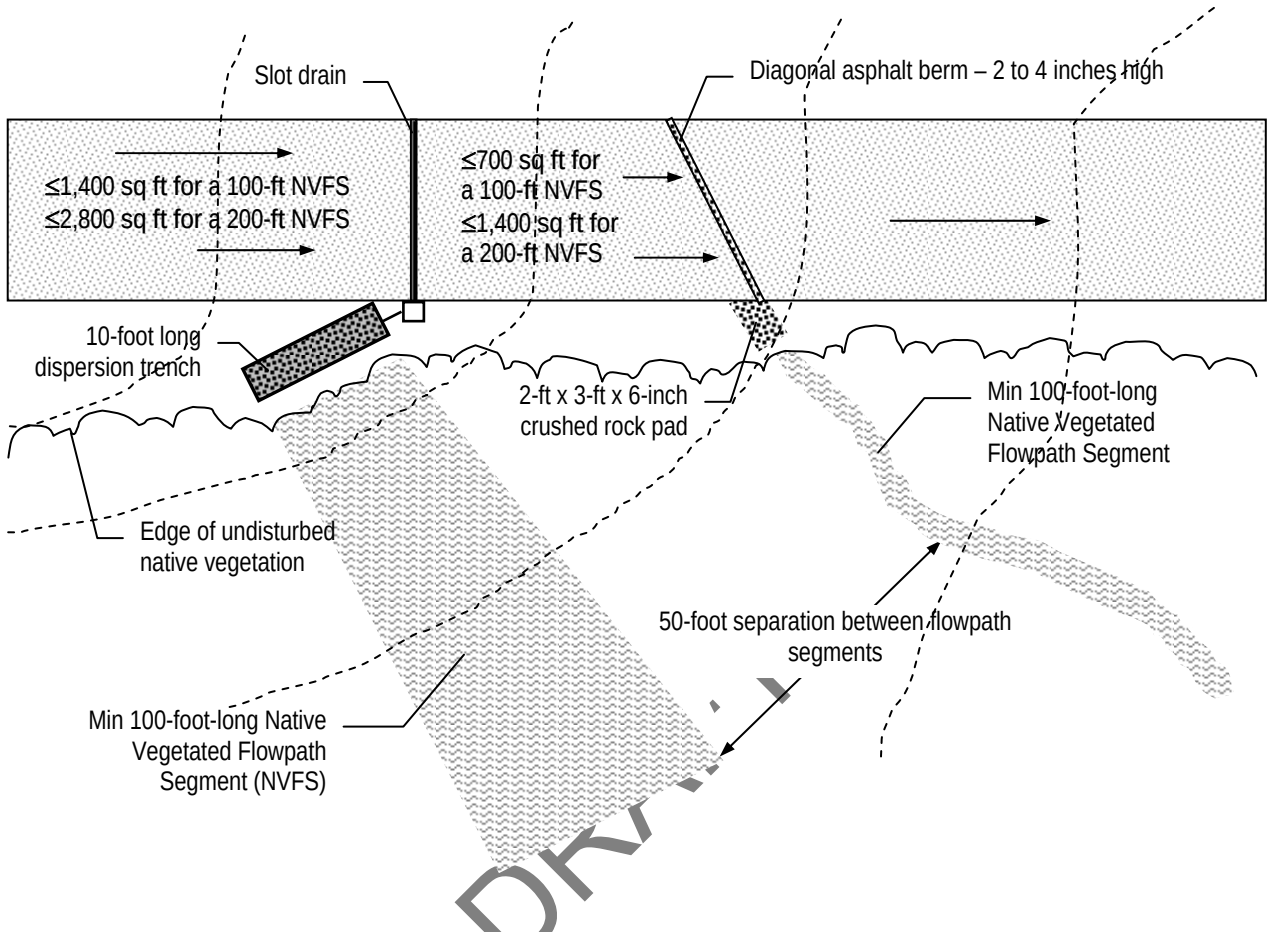

PLAN VIEW OF DRIVEWAY
NTS

FIGURE C.2.1.C 10-FOOT DISPERSION TRENCH CROSS-SECTION AND ROOF APPLICATION

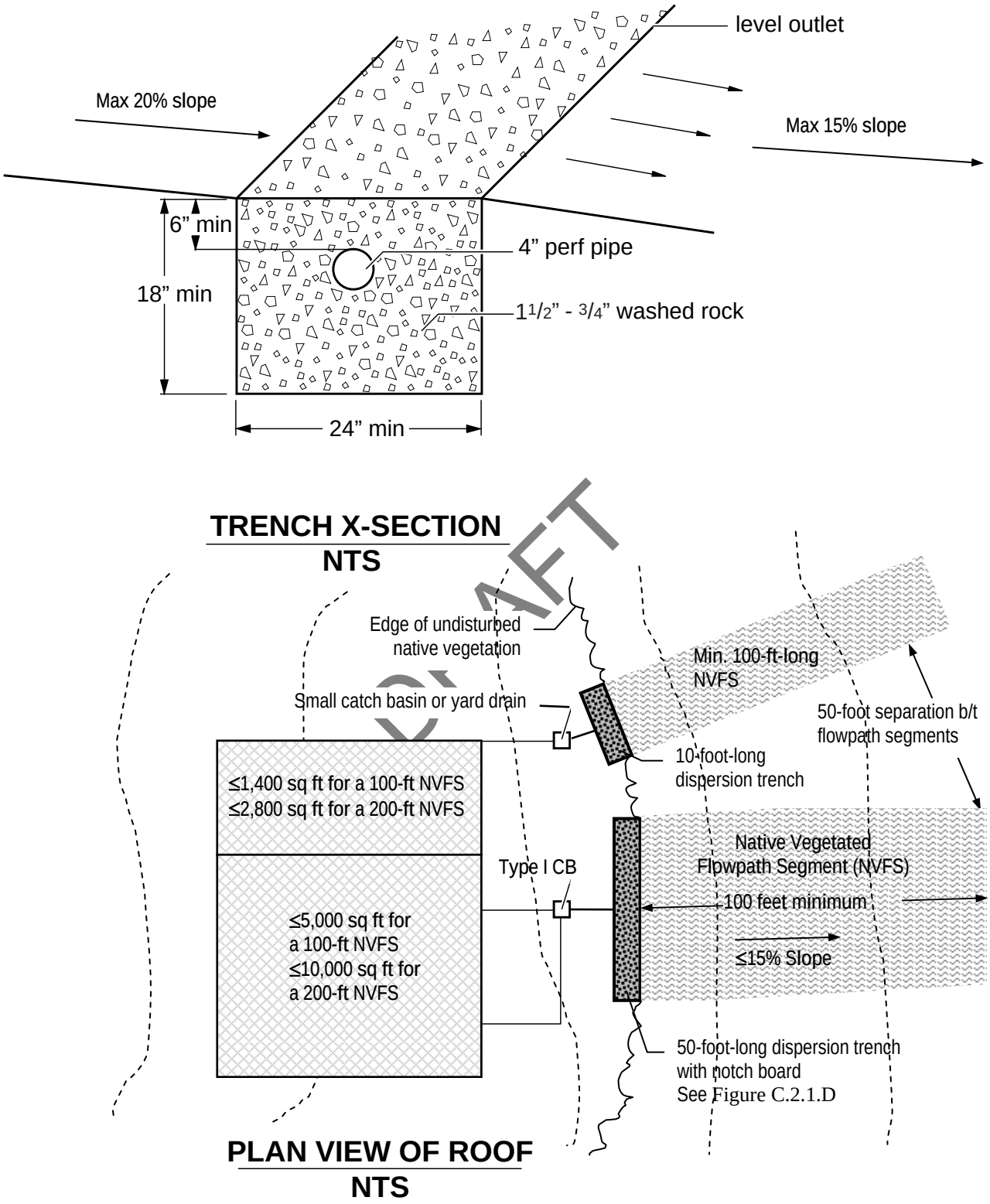

DRAFT

FIGURE C.2.1.D 50-FOOT DISPERSION TRENCH WITH NOTCHED BOARD

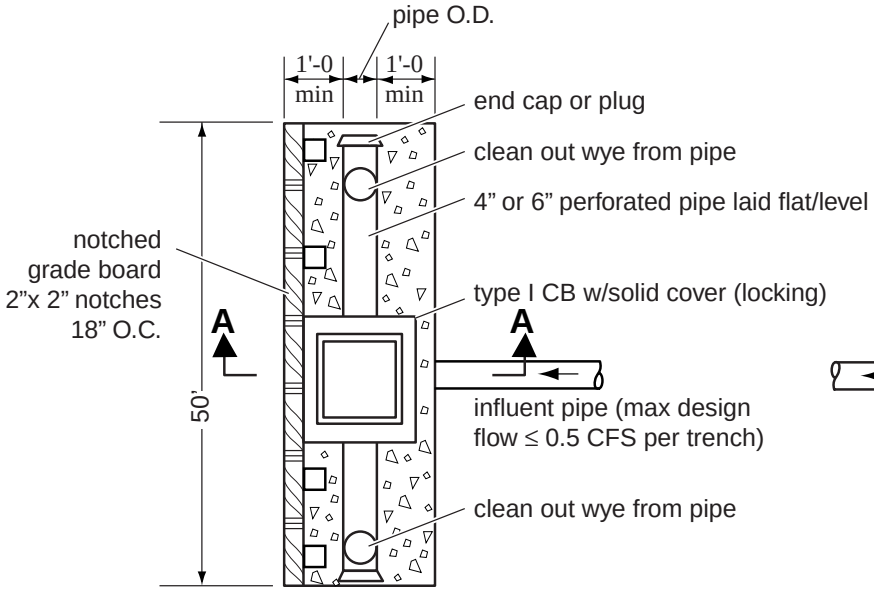

PLAN
NTS

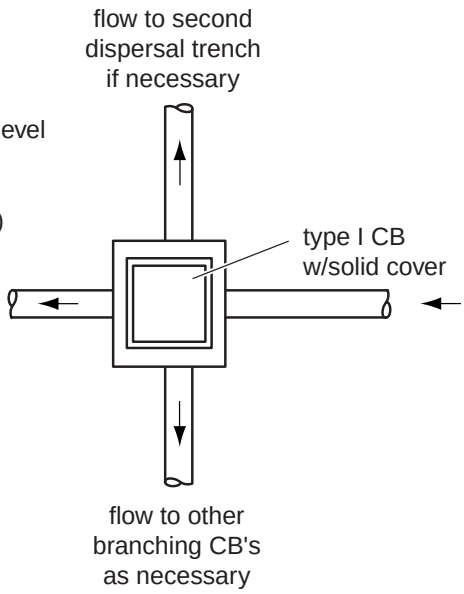

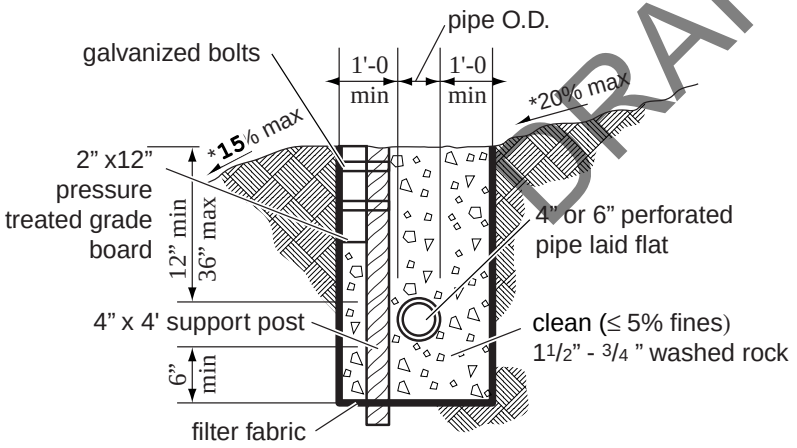

SECTION A-A
NTS

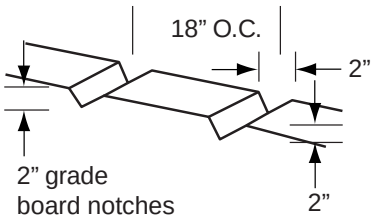

NOTES:

1. This trench shall be constructed so as to prevent point discharge and/or erosion.
2. Trenches may be placed no closer than 50 feet to one another. (100 feet along flowline)
3. Trench and grade board must be level. Align to follow contours of site.
4. Support post spacing as required by soil conditions to ensure grade board remains level.

DRAFT

FIGURE C.2.1.E APPLICATION OF SHEET FLOW DISPERSION

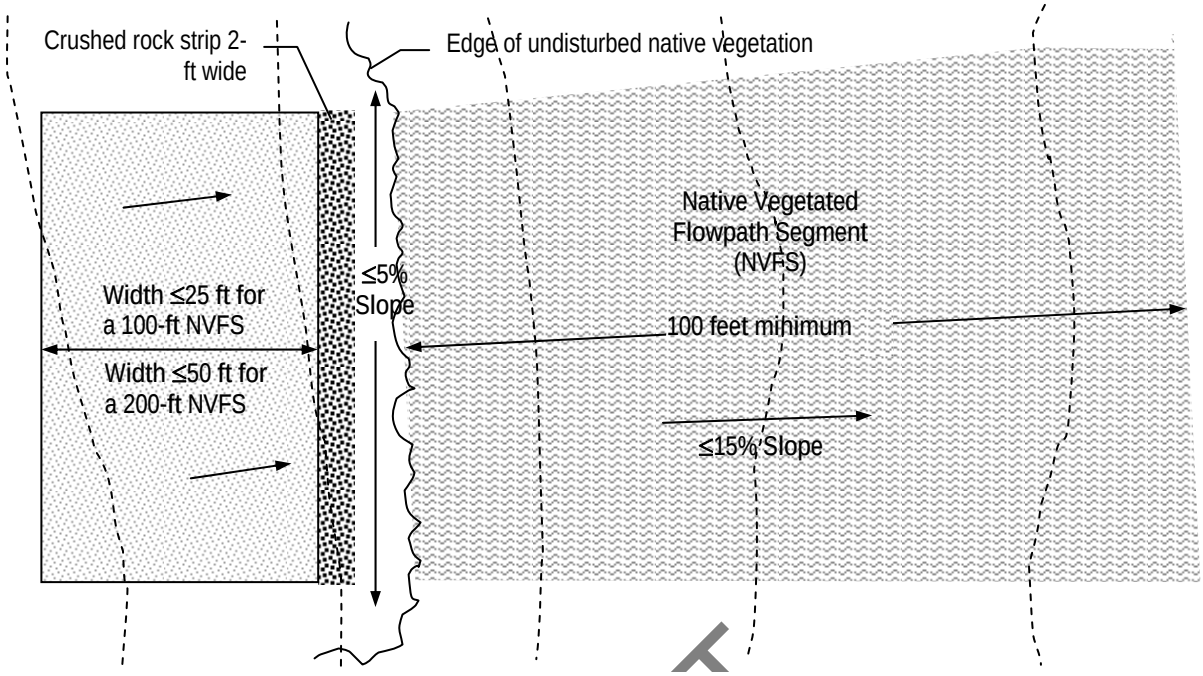

PLAN VIEW
NTS

DRAFT

C.2.1.8 NATIVE VEGETATED LANDSCAPE SPECIFICATIONS

Native vegetated landscape is basically the **manmade version of a *native vegetated surface***. It may be used in situations where an applicant wishes to convert a previously developed surface to a ***native vegetated surface*** for purposes of meeting full dispersion requirements or code requirements for forest retention. Native vegetated landscape is intended to have the soil, vegetation, and runoff characteristics approaching that of natural forestland.

Conversion of a previously developed surface to native vegetated landscape requires the removal of impervious surface, de-compaction of soils, and the planting of native trees, shrubs, and ground cover in compost-amended soil according to all of the following specifications:

1. **Existing impervious surface** and any underlying base course (e.g., crushed rock, gravel, etc.) must be completely removed from the conversion area(s).
2. **Underlying soils** must be broken up to a depth of 18 inches. This can be accomplished by excavation or ripping with either a backhoe equipped with a bucket with teeth, or a ripper towed behind a tractor.
3. At least 4 inches of well-decomposed **compost** must be tilled into the broken up soil as deeply as possible. The finished surface should be gently undulating and must be only lightly compacted.
4. The area of native vegetated landscape must be **planted with native species** trees, shrubs, and ground cover from Table C.2.1.B (p. C-38). Species must be selected as appropriate for ***site*** shade and moisture conditions, and in accordance with the following requirements:
   a) **Trees:** a minimum of two species of trees must be planted, one of which is a conifer. Conifer and other tree species must cover the entire landscape area at the spacing given in Table 1.
   b) **Shrubs:** a minimum of two species of shrubs should be planted. Space plants to cover the entire landscape area, excluding points where trees are planted.
   c) **Groundcover:** a minimum of two species of ground cover should be planted. Space plants so as to cover the entire landscape area, excluding points where trees or shrubs are planted.

   Note: for landscape areas larger than 10,000 square feet, planting a greater variety of species than the minimum suggested above is strongly encouraged. For example, an acre could easily accommodate three tree species, three species of shrubs, and two or three species of groundcover.
5. At least 4 inches of **hog fuel** or other suitable mulch must be placed between plants as mulch for weed control. It is also possible to mulch the entire area before planting; however, an 18-inch diameter circle must be cleared for each plant when it is planted in the underlying amended soil. *Note: plants and their root systems that come in contact with hog fuel or raw bark have a poor chance of survival.*
6. Plantings must be **watered** consistently once per week during the dry season for the first two years.
7. The **plantings must be well established** on at least 90% of the converted area in order to be considered a ***native vegetated surface***.

DRAFT

TABLE C.2.1.B SELECTED NATIVE VEGETATION, SIZE, AND SPACING REQUIREMENTS				
Species	**Type**	**Sun and Moisture Preferences**	**Planted Size**	**Spacing**
TREES				
Douglas fir (*Psedotsuga menziesii*)	conifer	Sun, dry to moist soil	5 gallon, 6'-7' B&B	12' o.c.
Western red cedar (*Thuja plicata)*	conifer	Sun or shade, moist to wet soil	5 gallon, 6'-7' B&B	12' o.c.
Western hemlock (*Tsuga heterophylla)*	conifer	Sun or shade, well-drained soil	5 gallon, 6'-7' B&B	12' o.c.
Sitka spruce (*Picea sitchensis*)	conifer	Sun or shade, moist mineral soils to wet soils	5 gallon, 6'-7' B&B	12' o.c.
Red alder (*Alnus rubra*)	tree	Sun, a Nitrogen fixer,	5 gallon, 5'-6' B&B	12' o.c.
Bigleaf maple (*Acer macrophyllum)*	tree	Sun or shade, dry to moist soil	5 gallon, 5'-6' B&B	12' o.c.
Black cottonwood (*Populus trichocarpa)*	tree	Sun, wet soil	5 gallon, 5'-6' B&B	12' o.c.
Cascara (*Rhamnus purshiana*)	tree/shrub	Sun to partial shade, dry to moist soil	5 gallon, 5'-6' B&B	8' o.c.
Pacific willow (*Salix lucida*)	tree/shrub	Sun, damp soil	1 gallon 2 gallon 5 gallon	4' o.c. 6' o.c. 8' o.c.
SHRUBS				
Sitka willow (*Salix sitchensis)*	shrub	Sun or shade, dry to damp soil	1 gallon 2 gallon 5 gallon	4' o.c. 6' o.c. 8' o.c.
Vine maple (*Acer circinatum*)	shrub	Shade, moist to damp soils	1 gallon 2 gallon 5 gallon	4' o.c. 6' o.c. 8' o.c.
Filbert (hazelnut) (*Corylus cornuta*)	shrub	Sun to shade, dry soil	1 gallon 2 gallon 5 gallon	4' o.c. 6' o.c. 8' o.c.
Salmonberry (*Rubus spectabilis*)	shrub	Sun to shade, moist to wet soil	1 gallon 2 gallon 5 gallon	4' o.c. 6' o.c. 8' o.c.
Thimbleberry (*Rubus parviflorus*)	shrub	Sun to partial shade, dry to moist soil	1 gallon 2 gallon 5 gallon	4' o.c. 6' o.c. 8' o.c.
Ocean spray (*Holodiscus discolor*)	shrub	Sun to partial shade, dry	1 gallon 2 gallon 5 gallon	4' o.c. 6' o.c. 8' o.c.
Tall Oregon grape (*Berberis aquifolium*)	shrub	Sun to shade, dry to moist soil	1 gallon	4' o.c.
Snowberry (*Symphoricarpos albus*)	shrub	Sun to shade, dry to wet soil	1 gallon, 30-36"	4' o.c.
Service berry *(Amelanchier alnifolia*)	shrub	Sun to shade, dry to wet soil	1 gallon	6' o.c.
Indian plum (*Oemleria cerasiformis*)	shrub	Sun to shade, moist soil	1 gallon	4' o.c.
Twinberry (*Lonicera involucrata*)	shrub	Sun to partial shade, moist soil	1 gallon	4' o.c.
GROUND COVER				
Evergreen huckleberry (*Vaccinium ovatum*)	groundcover	Sun to partial shade, moist soil	1 gallon	2' o.c.
Kinnikinick (*Arctostaphyllos uva-ursa*)	groundcover	Sun to partial shade, dry soil	1 gallon	2' o.c.
Salal (*Gaultheria shallon*)	groundcover	Sun to shade, dry to moist soil	1 gallon	18" o.c.
Low Oregon grape (*Mahonia repens*)	groundcover	Sun to partial shade, dry to moist soil	9-12"	18" o.c.
Sword fern (*Polystichum munitum*)	groundcover	Sun to deep shade, dry to moist soil	2 gallon	3' o.c.

DRAFT

C.2.1.9 MAINTENANCE INSTRUCTIONS FOR FULL DISPERSION

If the full dispersion flow control BMP is proposed for a project, the following maintenance and operation instructions must be recorded as an attachment to the required **declaration of covenant and grant of easement** per Requirement 3 of Section C.1.3.3 (p. C-19). The intent of these instructions is to explain to future property owners, the purpose of the BMP and how it must be maintained and operated. These instructions are intended to be a minimum; DDES may require additional instructions based on site-specific conditions. Also, as the County gains more experience with the maintenance and operation of these BMPs, future updates to the instructions will be posted on King County's *Surface Water Design Manual* website.

❑ TEXT OF INSTRUCTIONS

Your property contains a stormwater management flow control BMP (best management practice) called "full dispersion." Full dispersion is a strategy for minimizing the area disturbed by development (i.e., impervious or non-native pervious surfaces, such as concrete areas, roofs, and lawns) relative to native vegetated areas (e.g., forested surface) together with the application of dispersion techniques that utilize the natural capacity of the native vegetated areas to mitigate the stormwater runoff quantity and quality impacts of the developed surfaces. This flow control BMP has two primary components that must be maintained: (1) the devices that disperse runoff from the developed surfaces and (2) the native vegetated area.

Dispersion Devices

The dispersion devices used on your property include the following as indicated on the flow control BMP site plan: ❑ splash blocks, ❑ rock pads, ❑ gravel filled trenches, ❑ sheet flow. The size, placement, composition, and downstream flowpaths of these devices as depicted by the flow control BMP site plan and design details must be maintained and may not be changed without written approval either from the King County Water and Land Resources Division or through a future development permit from King County.

Dispersion devices must be inspected annually and after major storm events to identify and repair any physical defects. When native soil is exposed or erosion channels are present, the sources of the erosion or concentrated flow need to be identified and mitigated. Bare spots should be re-vegetated with native vegetation. Concentrated flow can be mitigated by leveling the edge of the pervious area and/or regrading or replenishing the rock in the dispersion device, such as in rock pads and gravel-filled trenches.

DRAFT

Native Growth Retention Area

The native vegetated surface required for full dispersion is delineated as a "native growth retention area" on the flow control BMP site plan. The trees, vegetation, ground cover, and soil conditions in this area may not be disturbed, except as allowed by the following provisions for that portion of the native growth retention area outside of critical areas and critical area buffers:

1. Trees may be harvested in accordance with a King County-approved forest management plan.
2. Individual trees that have a structural defect due to disease or other defects, and which threaten to damage a structure, road, parking area, utility, or place of employment or public assembly, or block emergency access, may be topped, pruned, or removed as needed to eliminate the threat.
3. Dead or fallen trees, tree limbs within ten feet of the ground, and branches overhanging a residence may be removed to reduce the danger of wildfire.
4. Noxious weeds (i.e., plant species listed on the State noxious weed list in Chapter 16-750 WAC) and invasive vegetation (i.e., plant species listed as obnoxious weeds on the noxious weed list adopted by the King County Department of Natural Resources and Parks) may be removed.
5. Passive recreation uses and related facilities, including pedestrian, equestrian community and bicycle trails, nature viewing areas, fishing and camping areas, and other similar uses that do not require permanent structures, are allowed if clearing and soil compaction associated with these uses and facilities does not exceed eight percent of the native growth retention area.

C.2.2 FULL INFILTRATION

This section presents the minimum requirements and design specifications for "full infiltration" of runoff from impervious surfaces. *Full infiltration* means the use of BMPs that can "fully and reliably" infiltrate (i.e., soak) runoff into the ground. "Fully" in this context means all the runoff from nearly all storm events is soaked into the ground. "Reliably" means that the soil conditions are favorable enough to assure that the device used to soak water into the ground (e.g., gravel filled trench, drywell, etc.) will perform as expected for a reasonable number of years before having to be replaced.

Applicable Surfaces

Full infiltration may be applied to any impervious surface (e.g., roof, driveway, parking area, or road) subject to the minimum design requirements and specifications in this section.

Operation and Maintenance

See Section C.2.2.6 (p. C-43).

C.2.2.1 REQUIRED SOILS REPORT

Many locations in King County have soils that are underlain by a compacted layer of soil (i.e., glacial till or hardpan) which severely limits soaking capacity and causes water to perch on the relatively impervious layer during the wet season. This can make full infiltration of runoff impracticable, cost prohibitive, unreliable, or all three. Thus, a soils report is necessary to identify soil types and depth to impermeable layers (hardpan) or the maximum wet season groundwater level.

For the purposes of determining if full infiltration of roof runoff is **mandatory** as outlined in Section C.1.3, the report is a requirement for any ***site*/lot** where full dispersion of runoff from ***target impervious surface*** is not feasible or applicable as specified in the individual lot BMP requirements in Sections C.1.3.1 and C.1.3.2. The report is also required for any **optional** use of full infiltration.

Soils reports for individual lots must include at least one **soils log** for each proposed infiltration location. Each log shall be a minimum of 4 feet deep (6 feet for drywells). The report shall describe the SCS series of the soil and the textural class of each horizon through the depth of the log, and it shall include notes of any evidence of a high groundwater table, such as mottling. Soils reports must be prepared by or under the direction of a **licensed onsite sewage system designer**, ***civil engineer***, ***engineering geologist***, or ***geotechnical engineer***.

A soils report produced for siting and design of an **onsite sewage system** may also be used to satisfy this soils report requirement, provided that (a) the depth of the soil log(s) is at least 4 feet, (b) the depth to seasonal high water table is determined, and (c) the location of the soil logs is adequate to determine the feasibility of the infiltration system.

Note: soils reports for a single infiltration system serving more than one lot must be prepared in accordance with the standards contained in Section 5.4 of the SWDM.

C.2.2.2 MINIMUM DESIGN REQUIREMENTS FOR FULL INFILTRATION

All of the following requirements must be met in order for full infiltration to be feasible and applicable to a ***target impervious surface***:

1. As determined from the soils report required in Section C.2.2.1, all of the following soil conditions must be met in vicinity of where the infiltration system would be located:

    a) Existing soils must be **coarse sands or cobbles or medium sands** and cannot be comprised of fill materials where the infiltration device will be located. *Note: full infiltration may be possible in*

DRAFT

*other types of soils or fill materials if designed by a **civil engineer** in accordance with the infiltration facility standards in Section 5.4 of the SWDM.*

b) For purposes of determining whether full infiltration of roof runoff is mandatory as outlined in Section C.1.3, the **depth of soil** to the maximum wet season water table or hardpan must be at least 3 feet. For any optional or mandatory application of full infiltration, the depth of soil to the maximum wet season water table or hardpan must be at least 1 foot below the bottom of a gravel filled infiltration system and at least 3 feet below the bottom of ground surface depression used for full infiltration.

2. For purposes of determining whether full infiltration of roof runoff is mandatory as outlined in Section C.1.3, one of the following **infiltration devices** must be used in accordance with the design specifications for each device set forth in Sections C.2.2.3, C.2.2.4, and C.2.2.5. *Note: full infiltration may be possible using other types and sizes of infiltration devices if designed by a **civil engineer** in accordance with the infiltration facility standards in Section 5.4 of the SWDM.*

   - **Gravel filled trenches** (see Section C.2.2.3, p. C-41)
   - **Drywells** (see Section C.2.2.4, p. C-42)
   - **Ground surface depressions** (see Section C.2.2.5, p.C-42)

3. A minimum 5-foot **setback** shall be maintained between any part of an infiltration device and any structure or property line. Larger setbacks from structures may be specified in the design specifications for each infiltration device. Infiltration devices may not be placed in sensitive area buffers. A 50-foot setback is required between an infiltration device and a ***steep slope hazard area*** or ***landslide hazard area*** (this may be reduced if approved by a ***geotechnical engineer*** or ***engineering geologist*** and DDES).

4. Infiltration devices are not allowed in critical area **buffers** or on **slopes** steeper than 25% (4 horizontal to 1 vertical). Infiltration devices proposed on slopes steeper than 15% or within 50 feet of a ***landslide hazard area*** or ***steep slope hazard area*** must be approved by a ***geotechnical engineer*** or ***engineering geologist*** unless otherwise approved by the DDES staff geologist.

5. For ***sites*** with **septic systems**, infiltration devices must be located downgradient of the primary and reserve drainfield areas. DDES permit review staff can waive this requirement if site topography clearly prohibits subsurface flows from intersecting the drainfield.

6. The infiltration of runoff must not create **flooding or erosion impacts** as determined by DDES. If runoff is infiltrated near a ***landslide hazard area***, ***erosion hazard area***, ***steep slope hazard area***, or a slope steeper than 15%, DDES may require evaluation and approval of the proposal by a ***geotechnical engineer*** or ***engineering geologist***.

DRAFT

C.2.2.3 USE OF GRAVEL FILLED TRENCHES FOR FULL INFILTRATION

Gravel filled trenches (also called "**infiltration trenches**") are a good option where the depth to the maximum wet-season water table or hardpan is between 3 and 6 feet. Figure C.2.2.A (p. C-44) and Figure C.2.2.B (p. C-45) illustrate the specifications for gravel filled trench systems as outlined below:

1. When located in coarse sands or cobbles, infiltration trenches must be at least 20 feet in **length** per 1,000 square feet of impervious surface served. When located in medium sands, infiltration trenches must be at least 30 feet in length per 1,000 square feet of impervious surface served.

2. **Maximum trench length** must not exceed 100 feet from the inlet sump.

3. The **trench width** must be a minimum of 2 feet.

4. The trench must be filled with at least 18 inches of $^{3}/_{4}$-inch to $1^{1}/_{2}$-inch **washed drain rock**. The drain rock may be covered with backfill material as shown in Figure C.2.2.A or remain exposed at least 6 inches below the lowest surrounding ground surface as shown in Figure C.2.2.B.

5. **Filter fabric** (geotextile) must be placed on top of the drain rock (if proposed to be covered with backfill material) and on the trench sides prior to filling with the drain rock.
6. **Spacing** between trench centerlines must be at least 6 feet.
7. Infiltration trenches must be **setback** at least 15 feet from buildings with crawl space or basement elevations that are below the overflow point of the infiltration system.
8. To prevent damage to overlying pavement, **trenches located beneath pavement** shall be constructed such that the trench pipe is connected to a small yard drain or catch basin with a grate cover so that if the trench infiltration capacity is exceeded, the overflow would occur out of the catch basin at an elevation at least one foot below that of any overlying pavement, and in a location that provides a safe path for the overflow.
9. Runoff from roadways, driveways, and parking areas shall pass through a yard drain or catch basin fitted with a **down-turned elbow** prior to entering the infiltration trench (see Figure C.2.2.B, p. C-45). The elbow is intended to trap spilled material in the catch basin sump so that the spilled material can be cleaned up more easily by the homeowner.

C.2.2.4 USE OF DRYWELLS FOR FULL INFILTRATION

Drywells are gravel filled holes as opposed to trenches and therefore may allow for a more compact design in areas where the depth to the maximum wet-season water table is relatively deep (e.g., 6 feet or greater). Figure C.2.2.C on page C-46 illustrates the specifications for drywell infiltration systems as outlined below:

1. When located in coarse sands and cobbles, drywells must contain a **volume of gravel** equal to or greater than 60 cubic feet per 1,000 square feet of impervious surface served. When located in medium sands, drywells must contain at least 90 cubic feet of gravel per 1,000 square feet of impervious surface served.
2. Drywells must be at least 48 inches in **diameter** and deep enough to contain the gravel amounts specified above for the soil type and impervious surface area served.
3. The gravel used for drywells must be $1^1/_2$-inch to 3-inch **washed drain rock**. The drain rock may be covered with backfill material as shown in Figure C.2.2.C (p. C-46) or remain exposed at least 6 inches below the lowest surrounding ground surface.
4. **Filter fabric** (geotextile) must be placed on top of the drain rock (if proposed to be covered with backfill material) and on the drywell sides prior to filling with the drain rock.
5. **Spacing** between drywells shall be a minimum of 10 feet.
6. Drywells must be **setback** at least 15 feet from buildings with crawl space or basement elevations that are below the overflow point of the drywell.

C.2.2.5 USE OF GROUND SURFACE DEPRESSIONS FOR FULL INFILTRATION

Ground surface depressions (also called "**infiltration depressions**") are another option for full infiltration if the maximum wet-season water table or hardpan is at least 3 feet below the bottom of the depression. Figure C.2.2.D illustrates the specifications for infiltration depressions as outlined below:

1. When located in coarse sands or cobbles, infiltration depressions must be able to store at least 40 cubic feet of stormwater per 1,000 square feet of impervious surface served. When located in medium sands, ground surface depressions must be able to store at least 60 cubic feet of stormwater per 1,000 square feet of impervious surface served. This **volume of water storage** must be achieved through the excavation of existing native soil, not through the construction of berms.
2. The stormwater storage areas of infiltration depressions must be at least 12 inches in **depth** with a minimum 6 inches of freeboard before overflow.

DRAFT

3. The depression **overflow point** must be at least 6 inches below any adjacent pavement area and must be situated so that overflow does not cause erosion damage or unplanned inundation.
4. The depression **side slopes** must be no steeper than 3 horizontal to 1 vertical.
5. **Spacing** between multiple infiltration depressions shall be a minimum of 4 feet.
6. Infiltration depressions must be **setback** at least 15 feet from buildings with crawl space or basement elevations that are below the overflow point of the infiltration depression.
7. Infiltration depressions may be any **size** or **shape** provided the above specifications and the minimum requirements in Section C.2.2.1 are met.
8. The ground surface of the infiltration depression must be **vegetated** with grass or other dense ground cover.

C.2.2.6 MAINTENANCE INSTRUCTIONS FOR FULL INFILTRATION

If the full infiltration flow control BMP is proposed for a project, the following maintenance and operation instructions must be recorded as an attachment to the required **declaration of covenant and grant of easement** per Requirement 3 of Section C.1.3.3 (p. C-19). The intent of these instructions is to explain to future property owners, the purpose of the BMP and how it must be maintained and operated. These instructions are intended to be a minimum; DDES may require additional instructions based on site-specific conditions. Also, as the County gains more experience with the maintenance and operation of these BMPs, future updates to the instructions will be posted on King County's *Surface Water Design Manual* website.

DRAFT

❑ TEXT OF INSTRUCTIONS

Your property contains a stormwater management flow control BMP (best management practice) called "full infiltration," which was installed to mitigate the stormwater quantity and quality impacts of some or all of the impervious surfaces on your property. Full infiltration is a method of soaking runoff from impervious area (such as paved areas and roofs) into the ground. If properly installed and maintained, full infiltration can manage runoff so that a majority of precipitation events are absorbed. Infiltration devices, such as gravel filled trenches, drywells, and ground surface depressions, facilitate this process by putting runoff in direct contact with the soil and holding the runoff long enough to soak most of it into the ground. To be successful, the soil condition around the infiltration device must be reliably able to soak water into the ground for a reasonable number of years.

The **infiltration devices** used on your property include the following as indicated on the flow control BMP site plan: ❑ gravel filled trenches, ❑ drywells, ❑ ground surface depressions. The size, placement, and composition of these devices as depicted by the flow control BMP site plan and design details must be maintained and may not be changed without written approval either from the King County Water and Land Resources Division or through a future development permit from King County.

Infiltration devices must be inspected annually and after major storm events to identify and repair any physical defects. Maintenance and operation of the system should focus on ensuring the system's viability by preventing sediment-laden flows from entering the device. Excessive sedimentation will result in a plugged or non-functioning facility. If the infiltration device has a catch basin, sediment accumulation must be removed on a yearly basis or more frequently if necessary. Prolonged ponding around or atop a device may indicate a plugged facility. If the device becomes plugged, it must be replaced. Keeping the areas that drain to infiltration devices well swept and clean will enhance the longevity of these devices. For roofs, frequent cleaning of gutters will reduce sediment loads to these devices.

FIGURE C.2.2.A TYPICAL TRENCH INFILTRATION SYSTEM

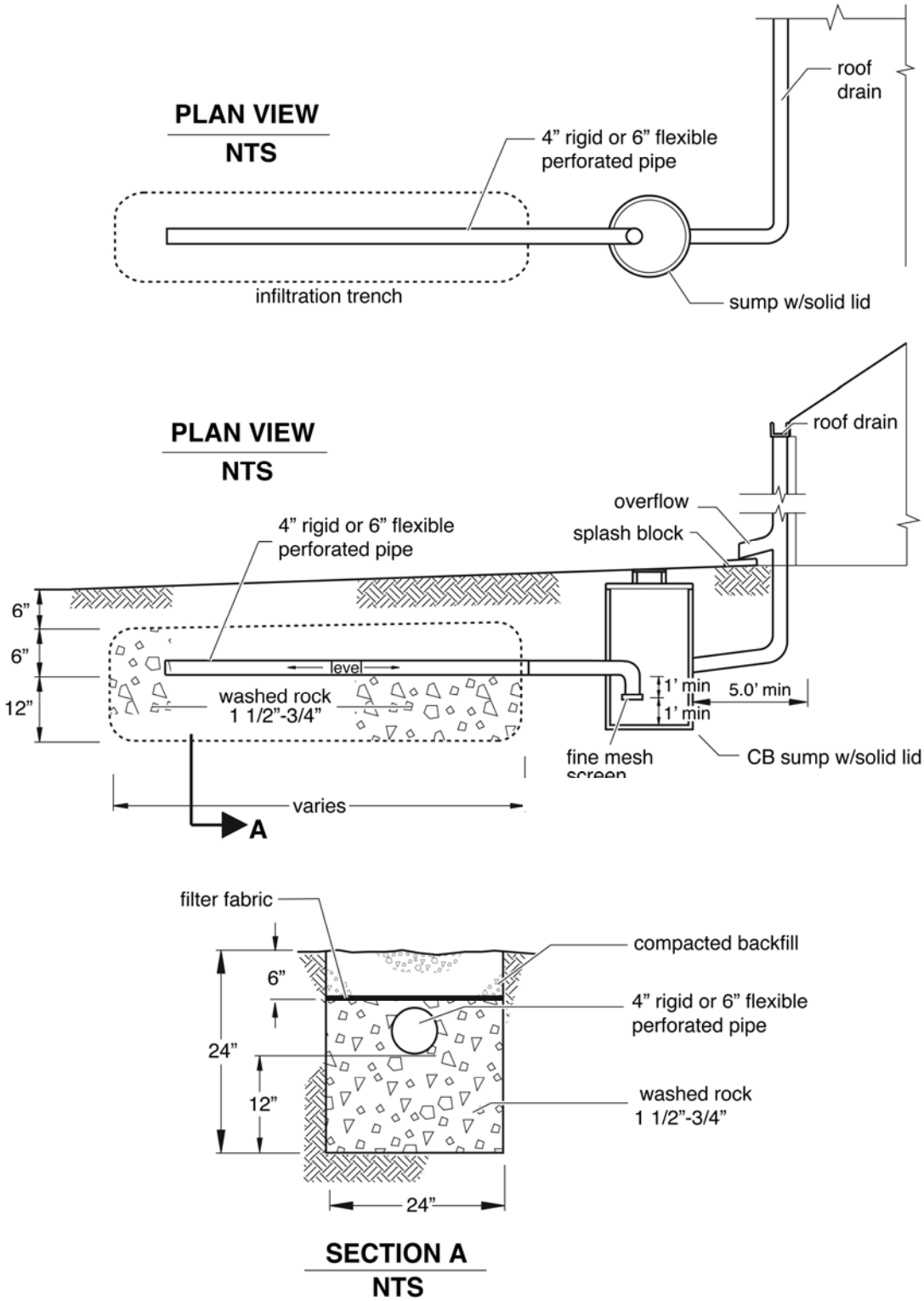

FIGURE C.2.2.B ALTERNATIVE TRENCH INFILTRATION SYSTEM

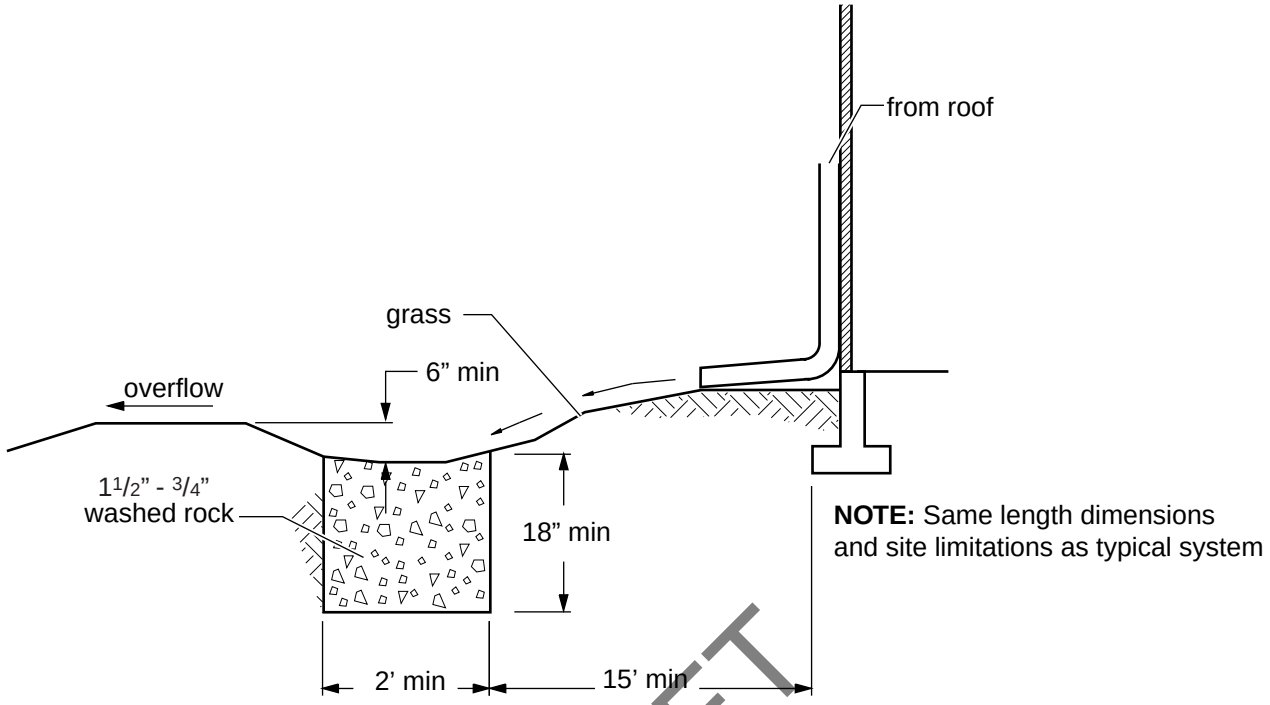

X-SECTION
NTS

DRAFT

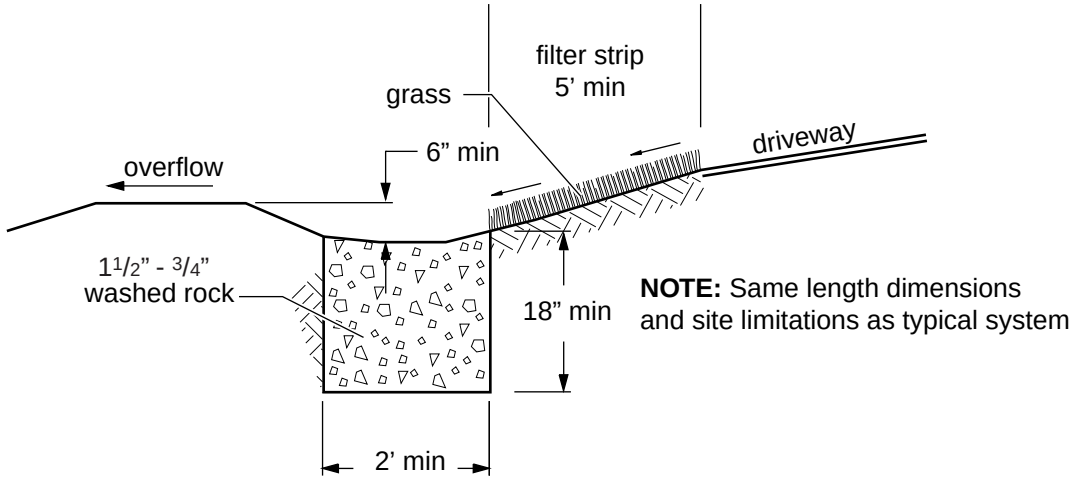

X-SECTION
NTS

FIGURE C.2.2.C TYPICAL DRYWELL INFILTRATION SYSTEM

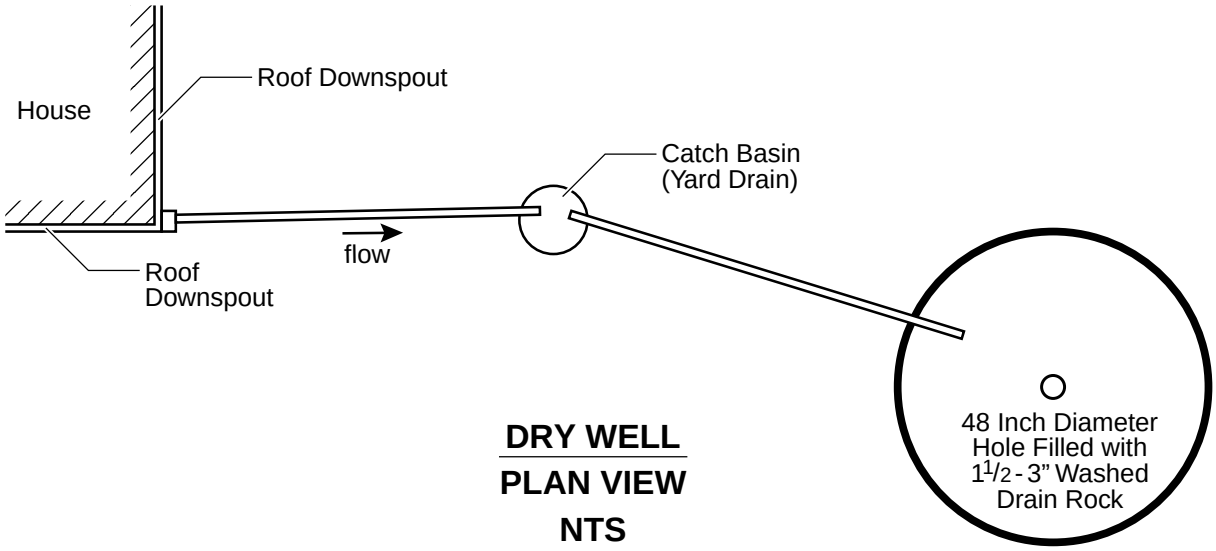

DRY WELL
PLAN VIEW
NTS

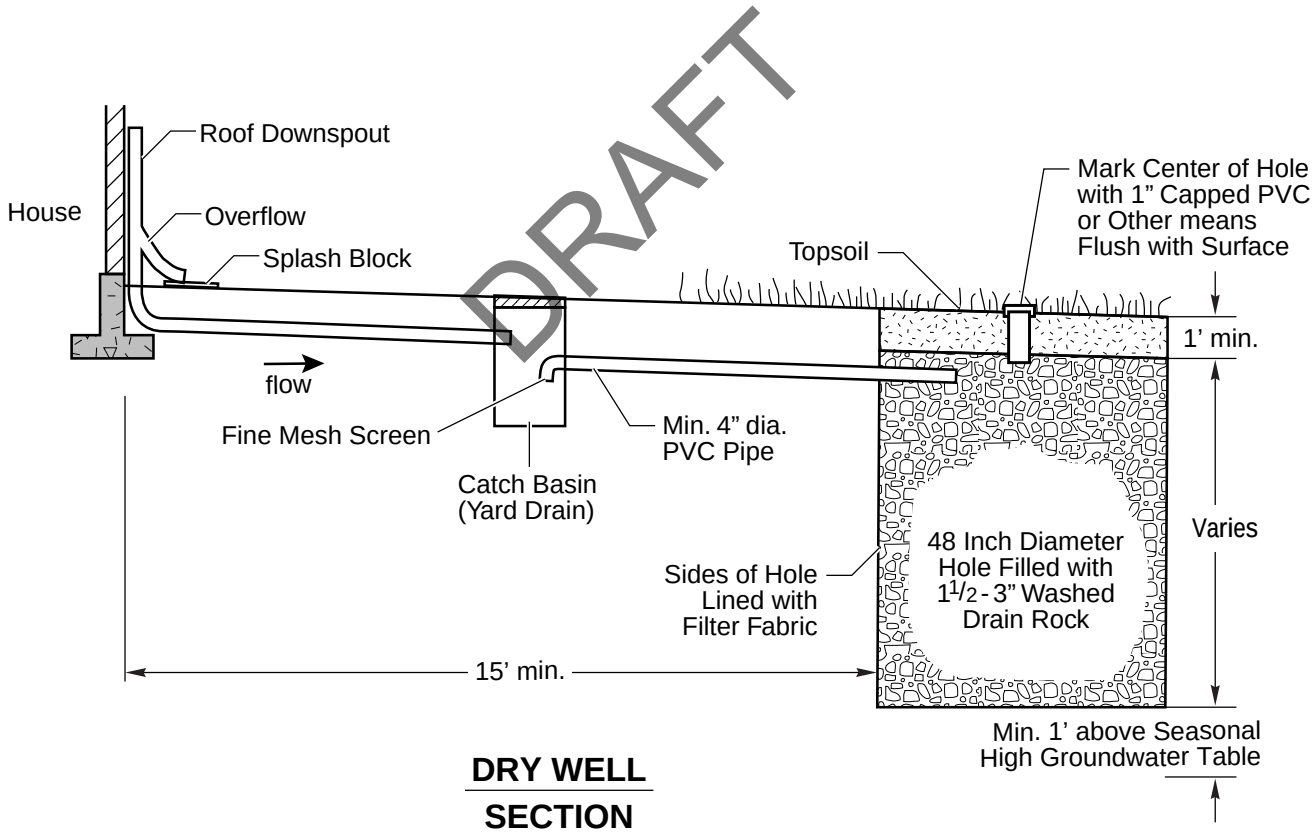

DRAFT

DRY WELL
SECTION
NTS

FIGURE C.2.2.D TYPICAL GROUND SURFACE DEPRESSION INFILTRATION SYSTEM

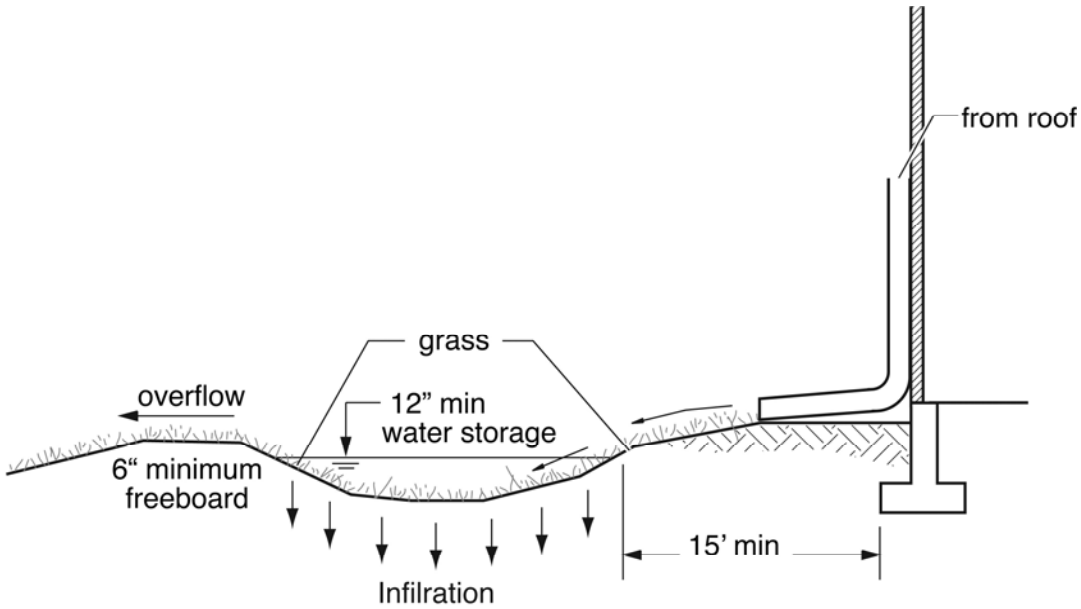

X-SECTION
NTS

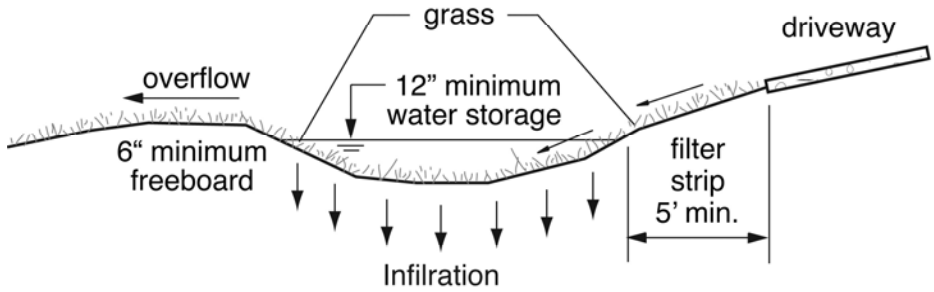

X-SECTION
NTS

C.2.3 LIMITED INFILTRATION

Limited infiltration is the use of infiltration devices from Section C.2.2 in soils that are not as permeable as the medium sands or coarse sands/cobbles targeted for full infiltration in Section C.2.2. These less desirable soils include fine sands, loamy sands, sandy loams, and loams, which tend to be more variable in permeability, more frequently saturated during the wet season, and more prone to plugging over time. While full infiltration may be possible under the best of these soil conditions, in the long run, these conditions will conspire to limit average infiltration capacity to something much less than that of full infiltration. Therefore, using limited infiltration as specified in this section will not be credited the same as using full infiltration as specified in Section C.2.2.

Applicable Surfaces

Limited infiltration may be applied to any impervious surface (e.g., roof, driveway, parking area, or road) subject to the minimum requirements and design specifications in this section.

Operation and Maintenance

See Section C.2.3.5 (p. C-49).

C.2.3.1 REQUIRED SOILS REPORT

In order to properly design limited infiltration devices, a soils report is required to identify the depth to impermeable layers (i.e., hardpan) and to the maximum wet season groundwater level. See Section C.2.2.1 (p. C-40) for more details on this report. In many cases, this report will have already been prepared as required in Sections C.1.3.1 and C.1.3.2 for lots where full dispersion is not feasible or applicable to ***target impervious surface*** per Section C.2.1.

DRAFT

C.2.3.2 MINIMUM DESIGN REQUIREMENTS FOR LIMITED INFILTRATION

The minimum requirements for limited infiltration are the same as those for full infiltration, except infiltration depressions are excluded and existing soils in the location of the infiltration device may be fine sands, loamy sands, sandy loams, or loams as opposed to only medium sands or better. *Note that gravel and medium sand soils used for full infiltration correspond to Soil Types 1A, 1B, 2A and 2B in the Soil Textural Classification system used for onsite septic system design; fine sands are Type 3; and loamy sands, sandy loams and loams are Type 4 soils. Silt and clay loams, and cemented till (hardpan) are not suitable for limited infiltration systems.*

C.2.3.3 USE OF GRAVEL FILLED TRENCHES FOR LIMITED INFILTRATION

The specifications for use of gravel filled trenches for limited infiltration are the same as those used for full infiltration, except that every 1,000 square feet of tributary impervious surface requires different **trench lengths** as follows: (a) 75 feet if the soil is a fine sand/loamy sand, (b) 125 feet if the soil is a sandy loam, or (c) 190 feet if the soil is a loam.

C.2.3.4 USE OF DRYWELLS FOR LIMITED INFILTRATION

The specifications for use of drywells for limited infiltration are the same as those used for full infiltration, except that every 1,000 square feet of tributary impervious surface requires different **gravel volumes** as follows: (a) 230 cubic feet if the soil is a fine sand/loamy sand, (b) 380 cubic feet if the soil is a sandy loam, or (c) 570 cubic feet if the soil is a loam.

C.2.3.5 MAINTENANCE INSTRUCTIONS FOR LIMITED INFILTRATION

If the limited infiltration flow control BMP is proposed for a project, the following maintenance and operation instructions must be recorded as an attachment to the required **declaration of covenant and grant of easement** per Requirement 3 of Section C.1.3.3 (p. C-19). The intent of these instructions is to explain to future property owners, the purpose of the BMP and how it must be maintained and operated. These instructions are intended to be a minimum; DDES may require additional instructions based on site-specific conditions. Also, as the County gains more experience with the maintenance and operation of these BMPs, future updates to the instructions will be posted on King County's *Surface Water Design Manual* website.

❑ TEXT OF INSTRUCTIONS

Your property contains a stormwater management flow control BMP (best management practice) called "limited infiltration," which was installed to mitigate the stormwater quantity and quality impacts of some or all of the impervious surfaces on your property. Limited infiltration is a method of soaking runoff from impervious area (such as paved areas and roofs) into the ground. Infiltration devices, such as gravel filled trenches, drywells, and ground surface depressions, facilitate this process by putting runoff in direct contact with the soil and holding the runoff long enough to soak most of it into the ground. To be successful, the soil condition around the infiltration device must be able to soak water into the ground for a reasonable number of years.

The **infiltration devices** used on your property include the following as indicated on the flow control BMP site plan: ❑ gravel filled trenches, ❑ drywells. The size, placement, and composition of these devices as depicted by the flow control BMP site plan and design details must be maintained and may not be changed without written approval either from the King County Water and Land Resources Division or through a future development permit from King County.

Infiltration devices must be inspected annually and after major storm events to identify and repair any physical defects. Maintenance and operation of the system should focus on ensuring the system's viability by preventing sediment-laden flows from entering the device. Excessive sedimentation will result in a plugged or non-functioning facility. If the infiltration device has a catch basin, sediment accumulation must be removed on a yearly basis or more frequently if necessary. Prolonged ponding around or atop a device may indicate a plugged facility. If the device becomes plugged, it must be replaced. Keeping the areas that drain to infiltration devices well swept and clean will enhance the longevity of these devices. For roofs, frequent cleaning of gutters will reduce sediment loads to these devices.

DRAFT

C.2.4 BASIC DISPERSION

Basic dispersion is the application of dispersion devices that utilize any available capacity of onsite vegetated areas to mitigate the runoff quantity and quality impacts from developed surfaces (i.e., impervious and non-native pervious surfaces). The requirements for basic dispersion are less restrictive than full dispersion (Section C.2.1) in that any type of vegetation cover is allowed, the flowpath lengths through the vegetation are shorter, and there is no requirement to preserve ***native vegetated surface*** (e.g., forested surface) or minimize developed surface. As such, its mitigation of runoff impacts is significantly lower than that of full dispersion.

Applicable Surfaces

Subject to the minimum design requirements and specifications in this section, basic dispersion may be applied to any impervious surface such as a roof, driveway, parking area, road, or sidewalk. Basic dispersion may also be used to disperse runoff from non-native pervious surface (e.g., lawns, landscaped areas, or pastures) if runoff from these surfaces is concentrated.

Operation and Maintenance

See Section C.2.4.6 (p. C-53).

C.2.4.1 MINIMUM DESIGN REQUIREMENTS FOR BASIC DISPERSION

DRAFT

All of the following requirements must be met in order for basic dispersion to be applicable to a target impervious or pervious surface:

1. Runoff from the target impervious or pervious surface must be discharged using one of the following **dispersion devices** in accordance with the design specifications and maximum area of developed surface for each device as set forth in Sections C.2.4.2 through C.2.4.5:
   - **Splash blocks** (see Section C.2.4.2, p. C-51)
   - **Rock pads** (see Section C.2.4.3, p. C-51)
   - **Gravel filled trenches** (see Section C.2.4.4, p. C-52)
   - **Sheet flow** (see Section C.2.4.5, p. C-53)
2. Each device must discharge runoff such that it flows over a minimum distance of vegetated area called the "**vegetated flowpath segment**." The minimum distance, or length of the flowpath segment, is specified in the design specifications for each device. The "vegetated flowpath segment" itself must meet all of the following criteria:
   a) The flowpath segment must be over well-established lawn or pasture, landscaping with well-established groundcover, or native vegetation with natural groundcover. The groundcover must be dense enough to help disperse and infiltrate flows and to prevent erosion.
   b) The flowpath segment must be **onsite or in an offsite tract or easement** area reserved for such dispersion.
   c) The **slope** of the flowpath segment must be no steeper than 15% for any 20-foot reach of the flowpath segment.
   d) The flowpath segment must be **located** between the dispersion device and any downstream impervious surface or drainage feature such as a pipe, ditch, stream, river, pond, lake, or wetland. All or a portion of the flowpath segment may be located within a critical area buffer.
3. Dispersion devices are not allowed in critical area **buffers** or on **slopes** steeper than 20%. Dispersion devices proposed on slopes steeper than 15% or within 50 feet of a ***steep slope hazard area*** or

landslide hazard area must be approved by a ***geotechnical engineer*** or ***engineering geologist*** unless otherwise approved by the DDES staff geologist.

4. For ***sites*** with **septic systems**, the discharge of runoff from dispersion devices must be located down slope of the primary and reserve drainfield areas. DDES permit review staff may waive this requirement if ***site*** topography clearly prohibits discharged flows from intersecting the drainfield.
5. The dispersion of runoff must not create **flooding or erosion impacts** as determined by the DDES. If runoff is discharged toward a ***landslide hazard area***, ***erosion hazard area***, ***steep slope hazard area***, or a slope steeper than 15%, DDES may require evaluation and approval of the proposal by a ***geotechnical engineer*** or ***engineering geologist***.

C.2.4.2 USE OF SPLASH BLOCKS FOR BASIC DISPERSION

Splash blocks are the simplest way to disperse flows from a roof area. Downspout splash blocks or downspout/drain extensions with splash blocks are often the only hardware required for this type of system. Vegetated flowpaths do the work of slowing and cleaning stormwater runoff. In general, if the ground is sloped away from the foundation, and there is adequate vegetation and area for effective dispersion, splash blocks will adequately disperse storm runoff. If the ground is fairly level, or if the structure includes a basement, or if foundation drains are proposed, splash blocks with downspout extensions may be a better choice because the discharge point is moved away from the foundation. Downspout extensions may include piping to a splash block that is a considerable distance from the roof downspout, provided the runoff can travel through a well-vegetated area as described below.

Uses: Roofs where runoff is collected and discharged via downspouts.

DRAFT

Design Specifications

Figure C.2.4.A (p. C-54) shows details of a roof downspout and splash block. The following specifications apply to use of splash blocks for basic dispersion:

1. No more than 700 square feet of roof area may be drained to a single splash block.
2. A "vegetated flowpath segment" of at least 50 feet in length must be available along the flowpath that runoff would follow upon discharge from the splash block.
3. For purposes of maintaining adequate separation of flows discharged from adjacent dispersion devices, the vegetated flowpath segment for the splash block must not overlap with other flowpath segments, except those associated with sheet flow from a non-native pervious surface.

C.2.4.3 USE OF ROCK PADS FOR BASIC DISPERSION

Pads of crushed rock, 2 feet wide (perpendicular to flow) by 3 feet long by 6 inches deep, may be used as a dispersion device to discharge concentrated runoff from small amounts of impervious surface or non-native pervious surface.

Uses: Roofs, driveways, lawns, pasture, etc. from which runoff is concentrated in a downspout, gutter, pipe, yard drain, ditch, swale, etc.

Design Specifications

Figure C.2.4.C (p. C-56) shows two possible ways of spreading flows from steep driveways. The following specifications apply to use of rock pads for basic dispersion:

1. No more than 700 square feet of impervious surface (or 5,000 square feet of non-native pervious surface) may be drained to a single rock pad.
2. A "vegetated flowpath segment" of at least 50 feet in length as illustrated in Figure C.2.4.C (p. C-56) must be available along the flowpath that runoff would follow upon discharge from the rock pad.

3. The pad of crushed rock shall be 2 feet wide by 3 feet long by 6 inches deep.
4. For purposes of maintaining adequate separation of flows discharged from adjacent dispersion devices, the vegetated flowpath segment for the rock pad must not overlap with other flowpath segments, except those associated with sheet flow from a non-native pervious surface.

C.2.4.4 USE OF GRAVEL FILLED TRENCHES FOR BASIC DISPERSION

Where dispersion of concentrated flows through 50 feet of vegetation is not feasible, such as on a small or highly constrained ***site***, a gravel filled trench (also called a **dispersion trench)** may be used to "unconcentrate" flows. Dispersion trenches provide some storage for runoff, promote infiltration, and spread concentrated flows so that a shorter vegetated flowpath length can be used at the trench outlet. This BMP is more expensive than the simple dispersion systems described above, and must be carefully constructed to be effective.

Uses: Roofs, driveways, lawns, pasture, etc. from which runoff is concentrated in a downspout, yard drain, pipe, drainage tile, etc.

Design Specifications

Figure C.2.4.B (p. C-55) shows two types of dispersion trenches that may be used, a "simple 10-foot trench" and a maximum "50-foot trench with notch board." The 50-foot trench with notch board is further detailed in Figure C.2.1.D (p. C-35). These gravel filled trenches must meet the following specifications for basic dispersion:

1. No more than 700 square feet of impervious surface (or 5,000 square feet of non-native pervious surface) may be drained to a simple 10-foot dispersion trench. Up to 3,500 square feet of impervious surface (or 25,000 square feet of non-native pervious surface) may be drained to a 50-foot trench with notch board. Smaller lengths of trench with notch board may be used at a ratio of 10 feet of trench per 700 square feet of impervious surface (or 5,000 square feet of non-native pervious surface).
2. A "vegetated flowpath segment" of at least 25 feet in length must be available along the flowpath that runoff would follow upon discharge from a dispersion trench. This length must be increased to 50 feet if the discharge is toward a ***steep slope hazard area*** or a ***landslide hazard area*** steeper than 15%. All or a portion of the vegetated flowpath segment may be within the buffer for the ***steep slope hazard area*** or ***landslide hazard area***.
3. The simple 10-foot trench illustrated in Figure C.2.4.B must be at least 2-feet wide by 18-inches deep. The maximum 50-foot trench with notch board detailed in Figure C.2.1.D must be at least 2-feet wide by 24-inches deep.
4. All trenches must be filled with $^{3}/_{4}$ to $1^{1}/_{2}$-inch washed rock.
5. All trenches must be placed at least 10 feet from any building and must be parallel as possible to the contour of the ground. A setback of at least 5 feet must be maintained between any edge of a trench and the property line.
6. For purposes of maintaining adequate separation of flows discharged from adjacent dispersion devices, the outer edge of the vegetated flowpath segment for the dispersion trench must not overlap with other flowpath segments, except those associated with sheet flow from a non-native pervious surface.

DRAFT

C.2.4.5 USE OF SHEET FLOW FOR BASIC DISPERSION

Sheet flow, as a dispersion device, is the grading of a developed surface (either a strip of impervious surface or a width of non-native pervious surface) as needed to avoid the concentration of runoff before and after discharge from the surface. Two types of sheet flow, one for impervious surface and one for pervious surface, are detailed in this section.

Uses: Flat or moderately sloping surfaces (<15% slope) such as driveways, sport courts, patios, roofs without gutters, lawns, pastures, etc.; or any situation where concentration of flows can be avoided.

Design Specifications for Impervious Surface Sheet Flow (Basic Dispersion)

Figure C.2.4.D (p. C-57) illustrates a typical use of sheet flow dispersion for impervious surface in accordance with the following specifications:

1. The strip of impervious surface may be either roof (with no gutter) or pavement. The edge of the target impervious strip and the ground adjacent to or immediately below the edge must be either level or sloped such that the direction of sheet flow is perpendicular to the edge or no more than 45 degrees from perpendicular.
2. A 2-foot-wide, 4-to-6 inch-deep, strip of crushed rock or the extended base course of a road or driveway must be provided at or below the edge of the impervious strip to facilitate dispersal of runoff. This requirement may be waived for use of *reverse slope sidewalks*[17] and other impervious strips that are 10-feet wide or less.
3. A "vegetated flowpath segment" of at least 10 feet in length must be available along the flowpath that runoff would follow upon discharge from the strip of crushed rock.
4. No more than a 20-foot-wide strip of impervious surface may be sheet flowed in this manner unless the length of vegetated flowpath segment is increased 10 feet for each additional 20 feet of impervious surface width or fraction thereof.
5. For purposes of maintaining adequate separation of flows discharged from adjacent dispersion devices, the outer edge of the vegetated flowpath segment for the strip of impervious surface must not overlap with other flowpath segments, except those associated with sheet flow from a non-native pervious surface.

DRAFT

Design Specifications for Pervious Surface Sheet Flow (Basic Dispersion)

The runoff from any ***new pervious surface*** is considered dispersed by sheet flow if the runoff is not concentrated by a manmade or natural conveyance system (e.g., pipe, yard drain, drain tile, ditch, swale, etc.) within 25 feet of leaving the ***new pervious surface*** area or prior to leaving the ***site*** or entering a critical area buffer on the ***site***.

C.2.4.6 MAINTENANCE INSTRUCTIONS FOR BASIC DISPERSION

If the basic dispersion flow control BMP is proposed for a project, the following maintenance and operation instructions must be recorded as an attachment to the required **declaration of covenant and grant of easement** per Requirement 3 of Section C.1.3.3 (p. C-19). The intent of these instructions is to explain to future property owners, the purpose of the BMP and how it must be maintained and operated. These instructions are intended to be a minimum; DDES may require additional instructions based on site-specific conditions. Also, as the County gains more experience with the maintenance and operation of these BMPs, future updates to the instructions will be posted on King County's *Surface Water Design Manual* website.

[17] *Reverse slope sidewalk* is one that slopes away from rather than onto the roadway it abuts as required by County road standards. If this technique is proposed within County right-of-way, a Road Variance will be required for its use.

❑ TEXT OF INSTRUCTIONS FOR BASIC DISPERSION

Your property contains a stormwater management flow control BMP (best management practice) called "basic dispersion," which was installed to mitigate the stormwater quantity and quality impacts of some or all of the impervious surfaces or non-native pervious surfaces on your property. Basic dispersion is a strategy for utilizing any available capacity of onsite vegetated areas to retain, absorb, and filter the runoff from developed surfaces. This flow control BMP has two primary components that must be maintained: (1) the devices that disperse runoff from the developed surfaces and (2) the vegetated area over which runoff is dispersed.

Dispersion Devices

The dispersion devices used on your property include the following as indicated on the flow control BMP site plan: ❑ splash blocks, ❑ rock pads, ❑ gravel filled trenches, ❑ sheet flow. The size, placement, composition, and downstream flowpaths of these devices as depicted by the flow control BMP site plan and design details must be maintained and may not be changed without written approval either from the King County Water and Land Resources Division or through a future development permit from King County.

Dispersion devices must be inspected annually and after major storm events to identify and repair any physical defects. When native soil is exposed or erosion channels are present, the sources of the erosion or concentrated flow need to be identified and mitigated. Concentrated flow can be mitigated by leveling the edge of the pervious area and/or realigning or replenishing the rocks in the dispersion device, such as in rock pads and gravel filled trenches.

Vegetated Flowpaths

The vegetated area over which runoff is dispersed must be maintained in good condition free of bare spots and obstructions that would concentrate flows.

DRAFT

FIGURE C.2.4.A TYPICAL SPLASHBLOCK FOR BASIC DISPERSION

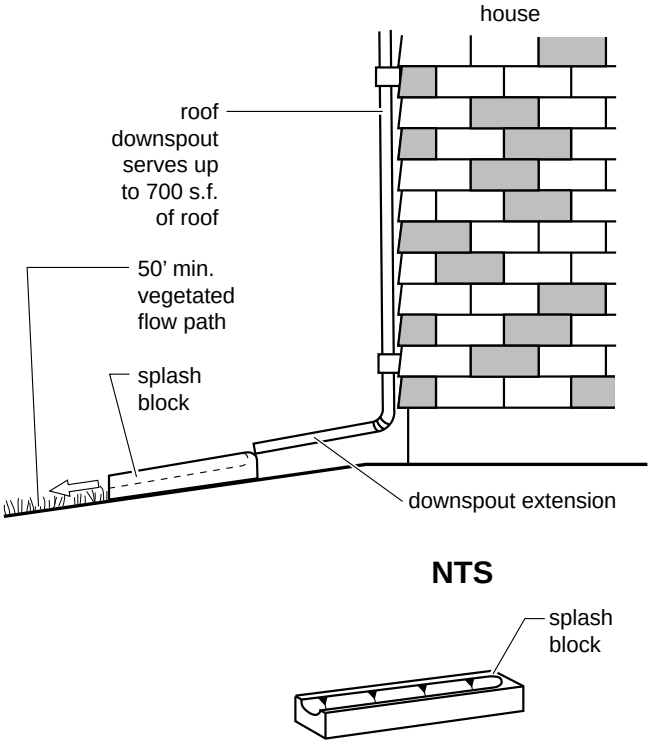

FIGURE C.2.4.B TYPICAL GRAVEL-FILLED DISPERSION TRENCH FOR BASIC DISPERSION

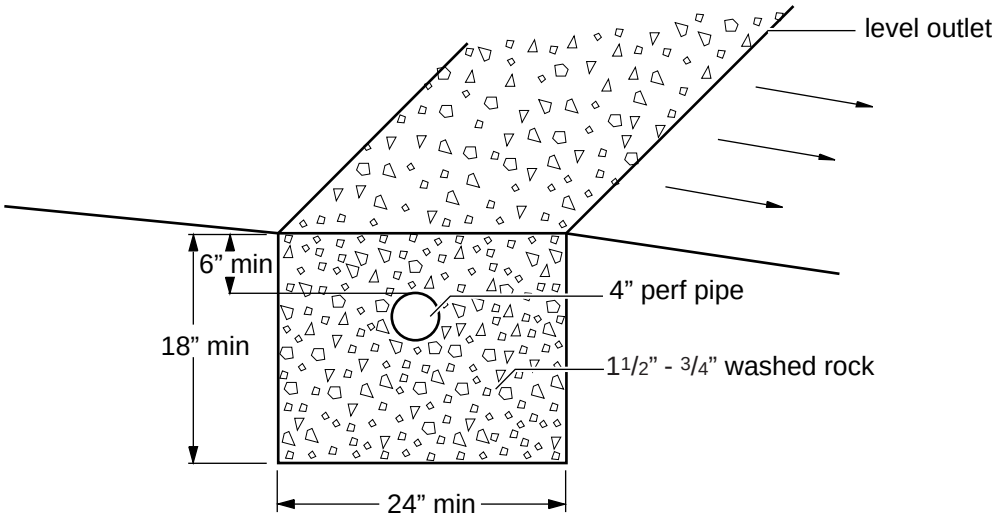

TRENCH X-SECTION
NTS

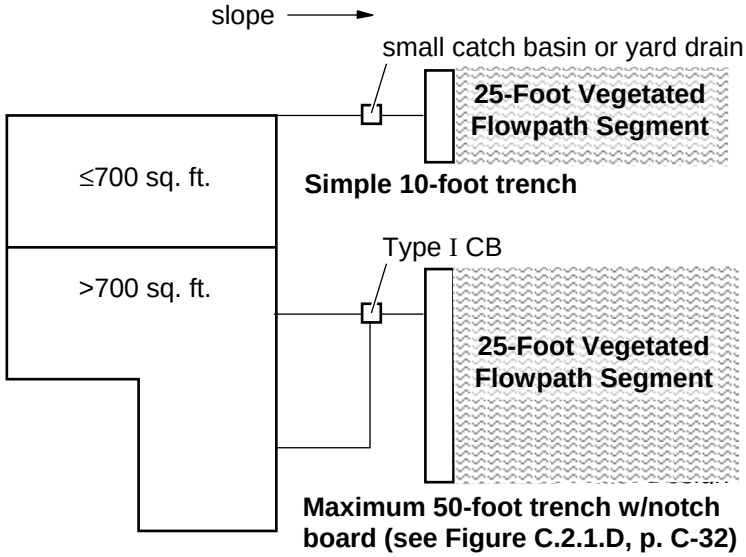

PLAN VIEW OF ROOF
NTS

FIGURE C.2.4.C EXAMPLES OF BASIC DISPERSION FOR STEEP DRIVEWAYS

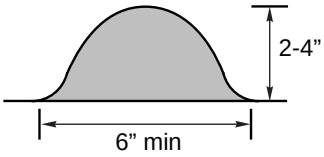

BERM DETAIL

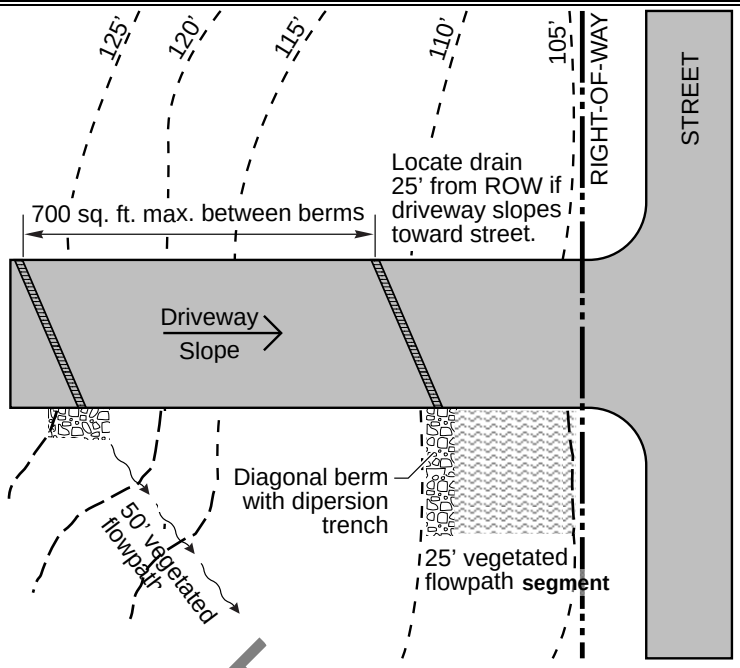

PLAN

Steep Driveway with Diagonal Berms

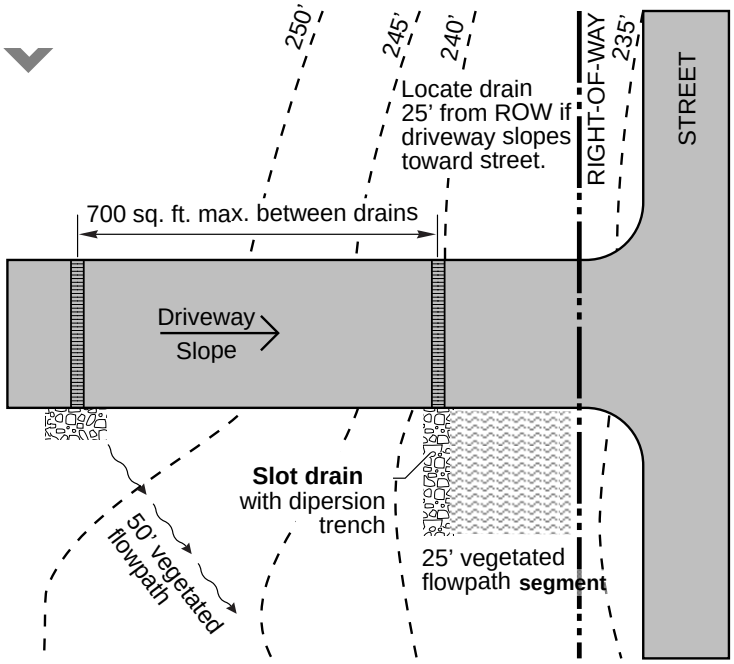

PLAN

Steep Driveway with Slotted Drains

FIGURE C.2.4.D EXAMPLES OF BASIC DISPERSION FOR DRIVEWAYS

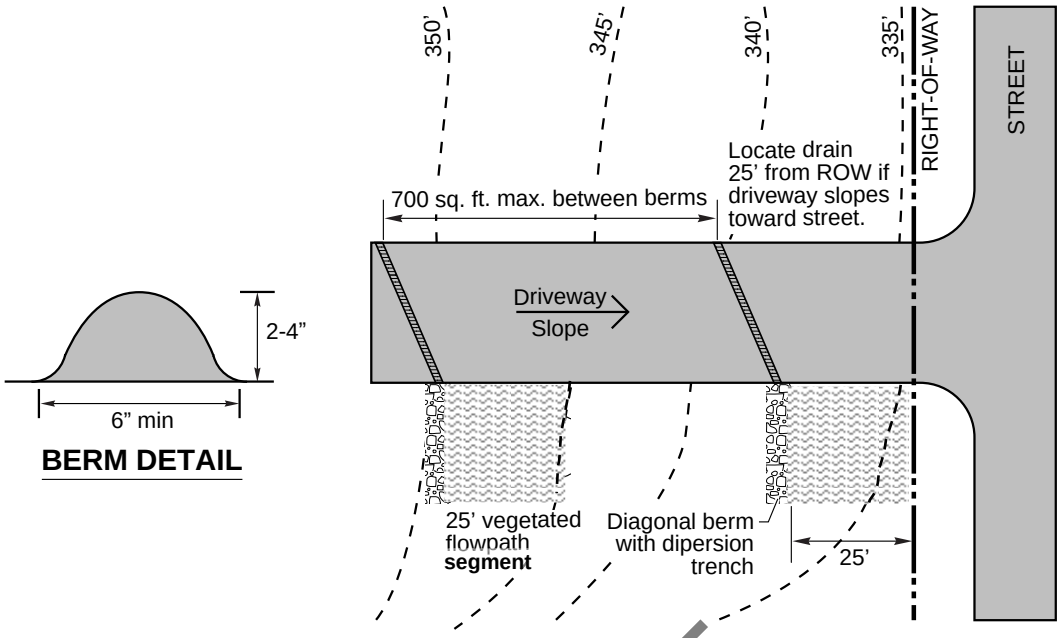

PLAN

Driveway Dispersion Trench
Driveway Slope Varies and Slopes Toward Street

DRAFT

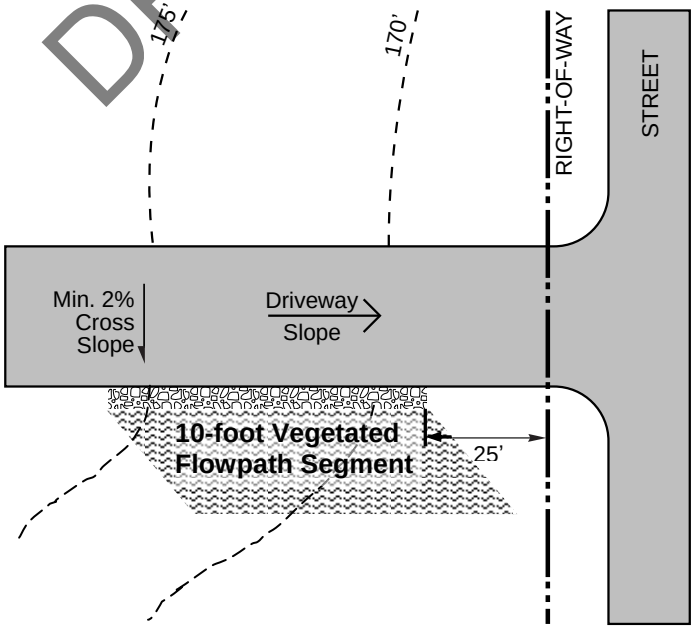

PLAN

Sheet Flow Dispersion from a Driveway
Flat to Moderately Sloping Driveways

C.2.5 RAIN GARDEN

Rain gardens, also known as "**bioretention**," are excavated or otherwise formed depressions in the landscape that provide for storage, treatment, and infiltration of stormwater runoff. The soil in the depression is enhanced to promote infiltration and plant growth. Plants adapted to wet conditions are planted in the enhanced soil. Figure C.2.5.A (p. C-60) shows a plan view and section of a typical rain garden system.

Applicable Surfaces

Subject to the minimum design requirements and specifications in this section, rain gardens may be applied to any impervious surface such as a roof, driveway, parking area, road, or sidewalk, and to any non-native pervious surface such as a lawn, landscaped area, or pasture.

Design Considerations

Rain gardens may overflow occasionally in large storm events or more frequently if located in very poorly drained soils or areas with very high water tables. In very well-drained soils, water may drain too quickly to support water loving plants and ponding may be of short duration. Conditioning the soil in the rain garden with abundant compost will enhance the growth of plants and help the soil to more readily admit water.

Operation and Maintenance

See Section C.2.5.3 (p. C-62).

DRAFT

C.2.5.1 MINIMUM DESIGN REQUIREMENTS

All of the following requirements must be met in order for a rain garden to be applicable to a ***target impervious surface*** or ***new pervious surface***:

1. A **minimum water storage volume** equivalent to 3 inches (0.25 feet) of runoff depth from the impervious surface area served is required. In other words, the volume in cubic feet shall equal 0.25 times the square footage of the impervious surface area served (see example calculation in Section C.2.5.2 below). For rain gardens serving ***new pervious surface***, a minimum water storage volume equivalent to 0.5 inches (0.04 feet) of runoff depth is required.
2. The **water storage area**, containing the minimum required storage volume, shall be 12 inches deep at overflow and have side slopes no steeper than 3 horizontal to 1 vertical. The overflow point of the water storage area shall be at least 6 inches below any adjacent pavement area. The overflow point must be situated so that overflow does not cause erosion damage or unplanned inundation.
3. If a **containment berm** is used to form the water storage area, the berm must be at least 2 feet wide and 6 inches above the 12 inches of water depth. A **catch basin** or **rock pad** must be provided to release water when the pond's water level exceeds the 12 inches of water depth. The catch basin may discharge to the local drainage system or other acceptable discharge location via a 4-inch rigid pipe. The rock pad may be used with or without a constructed drainage system downstream. If a rock pad is used, it must be composed of crushed rock, 6-inches deep and 2 feet wide (perpendicular to flow) and must extend at least 4 feet or beyond the containment berm, whichever is greater. The rock pad must be situated so that overflow does not cause erosion damage or unplanned inundation.
4. **Amended soil** consisting of minimum of 4 inches of compost tilled into the upper 12 inches of soil or 12 inches of imported sand/compost blend having 8 to 13% organic material by dry weight is required in the rain garden. Tilling and amending to greater depth is desirable.
5. **Water tolerant plants** such as those in Table C.2.5.A shall be planted in the pond bottom. Plants native to Western Washington are preferred.

6. A minimum 5-foot **setback** shall be maintained between any part of a rain garden and any structure or property line.
7. Rain gardens are not allowed in critical area **buffers** or on **slopes** steeper than 20%. Rain gardens proposed on slopes steeper than 15% or within 50 feet of a ***steep slope hazard area*** or ***landslide hazard area*** must be approved by a ***geotechnical engineer*** or ***engineering geologist*** unless otherwise approved by the DDES staff geologist.
8. For ***sites*** with **septic systems**, rain gardens must be located downgradient of the primary and reserve drainfield areas. DDES permit review staff can waive this requirement if site topography clearly prohibits subsurface flows from intersecting the drainfield.
9. The rain garden must not create **flooding or erosion impacts** as determined by the DDES. If a rain garden is proposed near a ***landslide hazard area***, ***erosion hazard area***, ***steep slope hazard area***, or a slope steeper than 15%, DDES may require evaluation and approval of the proposal by a ***geotechnical engineer*** or ***engineering geologist***.

TABLE C.2.5.A WATER TOLERANT PLANTS

Common Name	Scientific Name	Spacing (on center)
Western mannagrass	*Glyceria occidentalis*	seed
Velvetgrass	*Holcus mollis*	seed
Shortawn foxtail	*Alopecurus aequalis*	seed
Water foxtail	*Alopecurus geniculatus*	seed
Spike rush	*Eleocharis spp.*	4 inches
Slough sedge	*Carex obnupta*	6 inches or seed
Sawbeak sedge	*Carex stipata*	6 inches
Sedge	*Carex* spp.	6 inches
Slender rush	*Juncus tenuis*	6 inches
Water parsley	*Oenanthe sarmentosa*	6 inches
Hardstem bulrush	*Scirpus acutus*	6 inches
Watercress	*Rorippa nasturtium-aquaticum*	12 inches
Small-fruited bulrush	*Scirpus microcarpus*	12 inches

DRAFT

C.2.5.2 EXAMPLE SIZING CALCULATION

Runoff Source: 20-foot by 20-foot driveway

Minimum Storage Required = 3 inches (0.25 feet)

Storage Volume Needed = 20 feet x 20 feet x 0.25 feet = 100 cubic feet

Pond Design: Choosing a 1 foot depth with 3:1 side slopes and a bottom area of 4 feet x 10 feet provides a storage volume of 100 cubic feet.

Note that if the soil percolation rate is 0.5 inches per hour, a pond 1-foot deep will take 24 hours to drain when filled. Similarly, a small storm of 0.5 inches would produce a depth of about 3 inches and drain in 6 hours.

FIGURE C.2.5.A TYPICAL RAIN GARDEN (BIORETENTION POND)

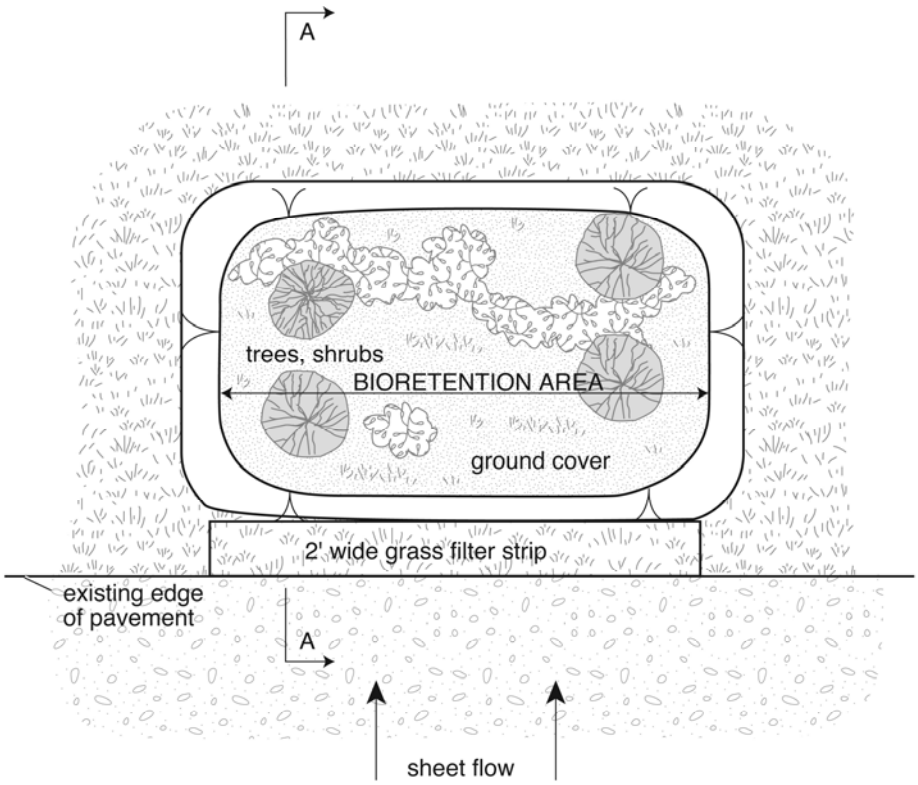

PLAN VIEW (not to scale)

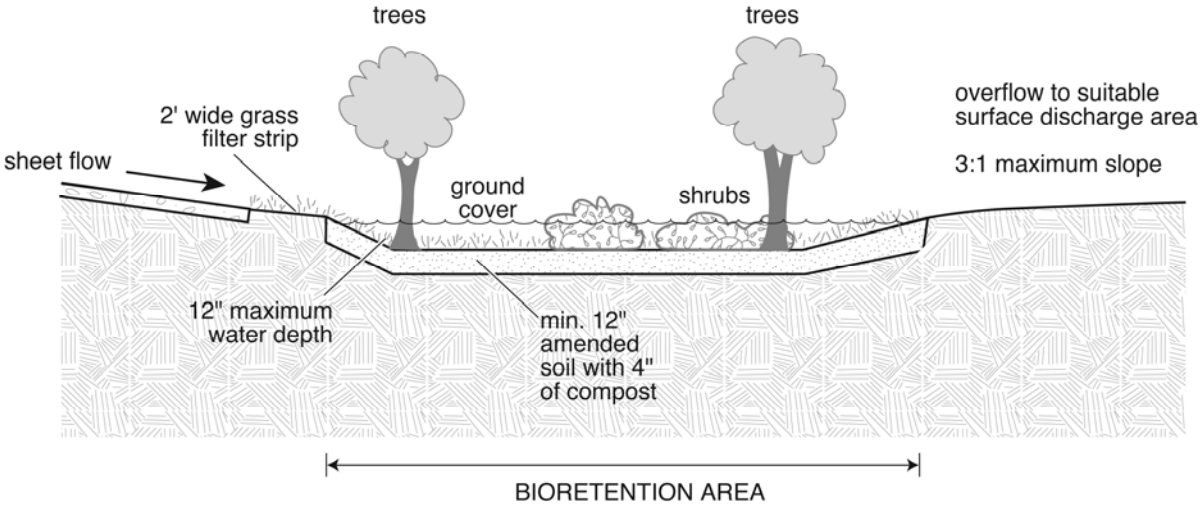

SECTION VIEW A-A (not to scale)

FIGURE C.2.5.B TYPICAL RAIN GARDEN WITH CONTAINMENT BERM

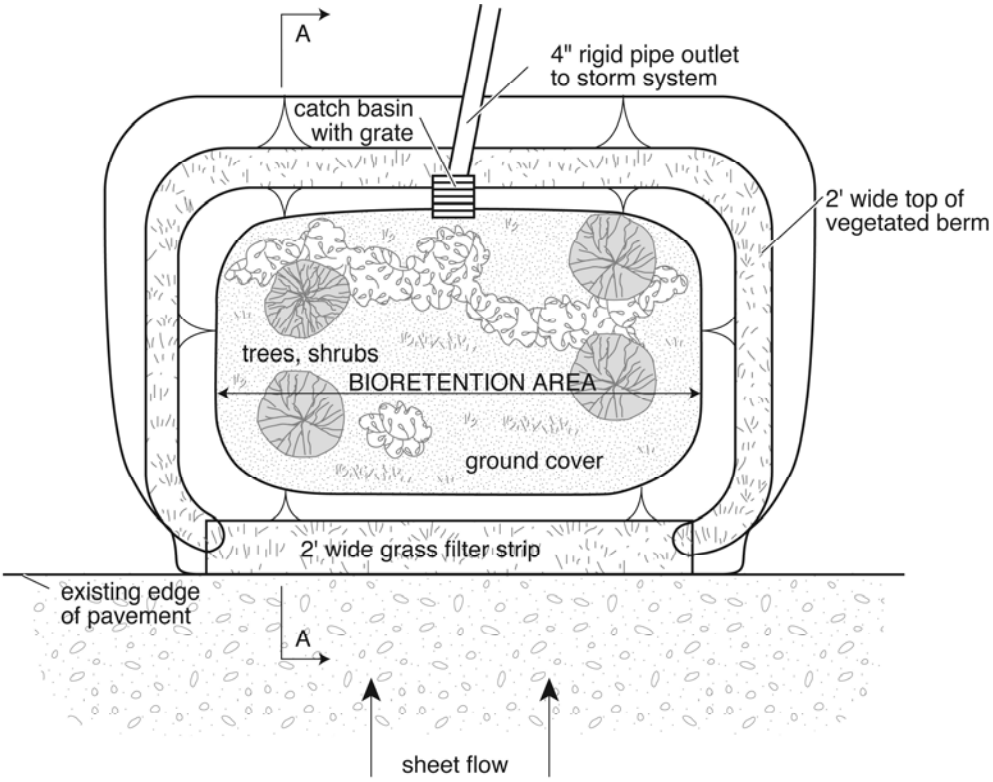

PLAN VIEW (not to scale)

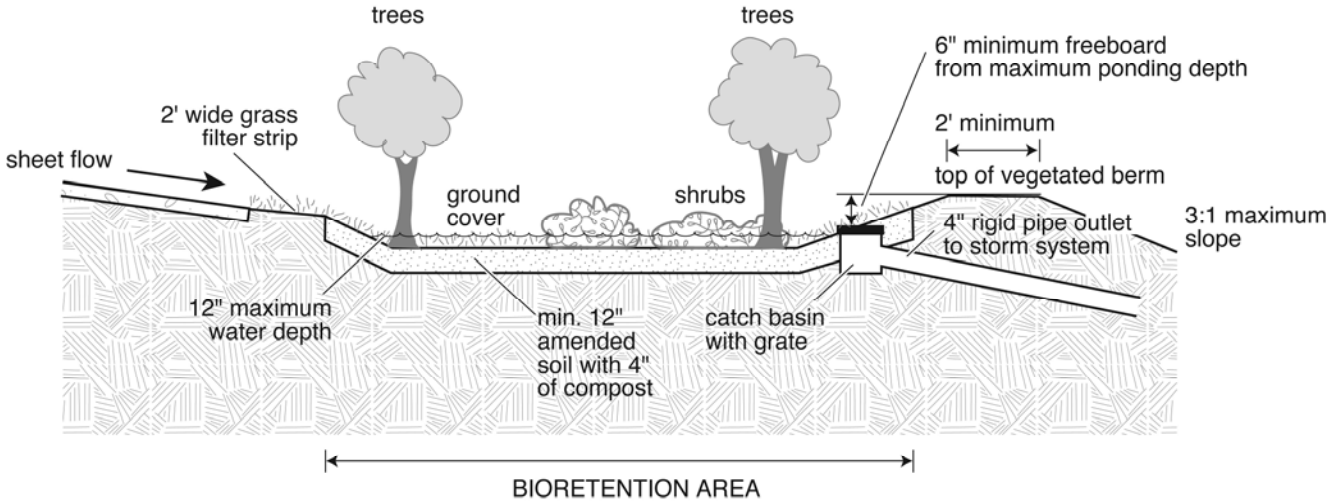

SECTION VIEW A-A (not to scale)

C.2.5.3 MAINTENANCE INSTRUCTIONS FOR A RAIN GARDEN

If the rain garden flow control BMP is proposed for a project, the following maintenance and operation instructions must be recorded as an attachment to the required **declaration of covenant and grant of easement** per Requirement 3 of Section C.1.3.3 (p. C-19). The intent of these instructions is to explain to future property owners, the purpose of the BMP and how it must be maintained and operated. These instructions are intended to be a minimum; DDES may require additional instructions based on site-specific conditions. Also, as the County gains more experience with the maintenance and operation of these BMPs, future updates to the instructions will be posted on King County's *Surface Water Design Manual* website.

❑ TEXT OF INSTRUCTIONS

Your property contains a stormwater management flow control BMP (best management practice) called a "rain garden," which was installed to mitigate the stormwater quantity and quality impacts of some or all of the impervious or non-native pervious surfaces on your property. Rain gardens, also known as "bioretention," are vegetated closed depressions or ponds that retain and filter stormwater from an area of impervious surface or non-native pervious surface. The soil in the rain garden has been enhanced to encourage and support vigorous plant growth that serves to filter the water and sustain infiltration capacity. Depending on soil conditions, rain gardens may have water in them throughout the wet season and may overflow during major storm events.

The size, placement, and design of the rain garden as depicted by the flow control BMP site plan and design details must be maintained and may not be changed without written approval either from the King County Water and Land Resources Division or through a future development permit from King County. Plant materials may be changed to suit tastes, but chemical fertilizers and pesticides must not be used. Mulch may be added and additional compost should be worked into the soil over time.

Rain gardens must be inspected annually for physical defects. After major storm events, the system should be checked to see that the overflow system is working properly. If erosion channels or bare spots are evident, they should be stabilized with soil, plant material, mulch, or landscape rock. A supplemental watering program may be needed the first year to ensure the long-term survival of the rain garden's vegetation. Vegetation should be maintained as follows: 1) replace all dead vegetation as soon as possible; 2) remove fallen leaves and debris as needed; 3) remove all noxious vegetation when discovered; 4) manually weed without herbicides or pesticides; 5) during drought conditions, use mulch to prevent excess solar damage and water loss.

DRAFT

C.2.6 PERMEABLE PAVEMENT

Permeable pavements include porous concrete, porous asphalt, cellular confinement gravel systems, unit pavers with a gravel bed, and grassed modular grid systems. There are many types of permeable pavement on the market today. Permeable pavement systems require careful design, construction, and maintenance in order to provide good service life and proper drainage. Manufacturer's recommendations should be strictly followed for proprietary systems.

Applicable Surfaces

Subject to the minimum design requirements and specifications in this section, permeable pavement systems may be applied to driveways, parking areas, sidewalks, and roads that are privately owned and maintained. Permeable pavement is not allowed in King County maintained road right-of-way unless approved by a Road Variance.

Design Considerations

Application of permeable pavement on steeper slopes may not be suitable because water draining through permeable base may daylight downslope. Ideally, permeable pavement slopes should be less than 5%. Areas with a high water table or highly impervious soils may be unsuitable for this pavement type.

Operation and Maintenance

See Section C.2.6.7 (p. C-65).

DRAFT

C.2.6.1 MINIMUM DESIGN REQUIREMENTS

All of the following requirements must be met in order for permeable pavement to be applicable to a ***target impervious surface***:

1. One of the following types of permeable pavement must be used in accordance with the design specifications for each type as set forth in Sections C.2.6.2 through C.2.6.6:
   - **Porous concrete** (see Section C.2.6.2, p. C-63)
   - **Porous asphaltic** concrete (see Section C.2.6.3, p. C-64)
   - **Permeable pavers** (see Section C.2.6.4, p. C-64)
   - **Modular grid pavement** (see Section C.2.6.5, p. C-64)
   - **Grassed modular grid pavement** (see Section C.2.6.6, p. C-65)
2. Permeable pavements shall be installed in accordance with the manufacturer's specifications, except when such specifications are less stringent than those set forth in Sections C.2.6.2 through C.2.6.6.
3. Permeable pavements shall not be placed on slopes steeper than 10%.

C.2.6.2 POROUS CONCRETE

Porous concrete consists of a mix of aggregate, cement paste, water and admixtures, but contains less fine aggregate than conventional concrete. Voids in the hardened concrete allow water to drain through the surface into the subgrade.

Uses: Sidewalks, patios, parking areas, and driveways.

Design Specifications

1. A minimum of 6 inches of free-draining sand or gravel base is required under the porous concrete surface.

2. The free-draining base shall have less than 5% fines (material passing the #200 sieve) based on the fraction passing the #4 sieve.
3. The porous concrete pavement shall be permeable enough to absorb water at a minimum rate of 10 inches per hour immediately after the pavement surface has been wetted continuously for at least 10 minutes. Compliance with this minimum rate shall be checked prior to construction approval of the pavement. Compliance may be checked using a simple bucket test in which 5 gallons of water are poured onto the pavement surface all at once from a 5-gallon bucket. If nothing but a scant amount of water puddles or runs off the surface, then the pavement is considered to meet the minimum rate of absorption. If this test is not conclusive, then a 6-inch ring sealed at the base to the pavement surface shall be used to measure the actual rate of absorption.
4. Porous concrete sidewalks placed in County road right-of-way (*note that a road variance is required for such placement*) or on private property subject to vehicle loading shall be a minimum of 5 inches thick and shall have a minimum 28-day compressive strength of 3000 psi.
5. Sidewalks and patios on private property not subject to vehicles shall be a minimum of 4 inches thick and should have a minimum 28-day compressive strength of 2000 psi.

C.2.6.3 POROUS ASPHALTIC CONCRETE

Porous asphaltic concrete uses a mix that contains less fine aggregate than conventional asphaltic concrete. Voids in the pavement allow water to drain through the surface into the subgrade.

Uses: Sidewalks, patios, parking areas, and driveways.

Design Specifications

Same as for porous concrete, except that the compressive strength specifications do not apply and the pavement section shall be as needed to provide a service life equivalent to conventional asphaltic concrete.

DRAFT

C.2.6.4 PERMEABLE PAVERS

Permeable pavers provide a solid surface but allow natural drainage and migration of water into the earth by permitting water to drain through the spaces between the pavers. On the Internet, there are a number of manufacturers and installers.

Uses: Sidewalks, patios, parking areas, and driveways.

Design Specifications

Same as for porous concrete, except that the compressive strength specifications do not apply and the pavement thickness shall be as specified by the manufacturer or a ***civil engineer***.

C.2.6.5 MODULAR GRID PAVEMENT

Modular grid pavement consists of a lattice of concrete, plastic, or other load bearing material over a permeable base of gravel or sand (or both). On the Internet, there is information on several manufacturers of the modular grid materials used for such pavement. These materials include plastic lattice, concrete pavers, or special forms for a cast-in-place concrete grid. These systems use a confining structure incorporated into the subgrade with an engineered fill material.

Uses: Low-traffic or infrequently used areas such as low-traffic driveways, overflow parking, event parking, church parking, employee parking, maintenance access roads, etc.; they are not allowed in King County road right-of-way.

Design Specifications

1. A minimum of 6 inches of free draining base material (sand or gravel) is required under the modular grid material.
2. The modular grid material must be installed according to the manufacturer's instructions.
3. The surface area of the modular grid openings must be at least 50% of the total surface area of the modular grid pavement.
4. The modular grid openings must be filled with gravel, sand, or a mixture of both.
5. Smooth surface walkways may be run across modular grid pavements, provided the impervious surfaced walkways do not exceed 10 percent of the total pavement surface.

C.2.6.6 GRASSED MODULAR GRID PAVEMENT

Grassed modular grid pavement is basically a modular grid pavement with grass planted in the openings or in a thin layer of soil over the grid material. The benefits of this measure are reduced runoff peaks and volumes resulting from the increased infiltration of stormwater, the increased water storage provided in the grid soil and base, and the increased evapotranspiration provided by the grass. The grassed surface also helps remove pollutants that are left behind by vehicles.

Uses: Low-traffic or infrequently used areas such as low-traffic driveways, overflow parking, event parking, church parking, employee parking, maintenance access roads, etc.; they are not allowed in King County road right-of-way.

Design Specifications

1. A minimum of 6 inches of free draining base material (sand or gravel) is required under the modular grid material.
2. The modular grid material must be installed according to the manufacturer's instructions.
3. The surface area of the modular grid openings must be at least 50% of the total surface area of the modular grid pavement.
4. The modular grid openings must be filled with a sandy soil mix suitable for growing grass as specified by the manufacturer's instructions or a landscape architect.
5. Smooth surface walkways may be run across modular grid pavements, provided the impervious surfaced walkways do not exceed 10 percent of the total pavement area.

DRAFT

C.2.6.7 MAINTENANCE INSTRUCTIONS FOR PERMEABLE PAVEMENT

If the permeable pavement flow control BMP is proposed for a project, the following maintenance and operation instructions, plus any provided by the manufacturer or installer, must be recorded as an attachment to the required **declaration of covenant and grant of easement** per Requirement 3 of Section C.1.3.3 (p. C-19). The intent of these instructions is to explain to future property owners, the purpose of the BMP and how it must be maintained and operated. These instructions are intended to be a minimum; DDES may require additional instructions based on site-specific conditions or manufacturer's recommendations. Also, as the County gains more experience with the maintenance and operation of these BMPs, future updates to these instructions will be posted on King County's *Surface Water Design Manual* website.

❑ TEXT OF INSTRUCTIONS FOR NON-VEGETATED PERMEABLE PAVEMENT

Your property contains a stormwater management flow control BMP (best management practice) called "permeable pavement," which was installed to minimize the stormwater quantity and quality impacts of some or all of the paved surfaces on your property. Permeable pavements reduce the amount of rainfall

that becomes runoff by allowing water to seep through the pavement into a free-draining gravel or sand bed, where it can be infiltrated into the ground.

The type(s) of permeable pavement used on your property is: ❑ porous concrete, ❑ porous asphaltic concrete, ❑ permeable pavers, ❑ modular grid pavement.

The area covered by permeable pavement as depicted by the flow control BMP site plan and design details must be maintained as permeable pavement and may not be changed without written approval either from the King County Water and Land Resources Division or through a future development permit from King County.

Permeable pavements must be inspected after one major storm each year to make sure it is working properly. Prolonged ponding or standing water on the pavement surface is a sign that the system is defective and may need to be replaced. If this occurs, contact the pavement installer or the King County Water and Land Resources Division for further instructions. A typical permeable pavement system has a life expectancy of approximately 25-years. To help extend the useful life of the system, the surface of the permeable pavement should be kept clean and free of leaves, debris, and sediment through regular sweeping or vacuum sweeping. The owner is responsible for the repair of all ruts, deformation, and/or broken paving units.

❑ TEXT OF INSTRUCTIONS FOR VEGETATED PERMEABLE PAVEMENT

Your property contains a stormwater management flow control BMP (best management practice) called "grassed modular grid pavement," which was installed to minimize the stormwater quantity and quality impacts of some or all of the paved surfaces on your property. Grassed modular grid pavement has the runoff characteristics of a lawn while providing the weight-bearing capacity of concrete pavement. The grassed surface not only minimizes runoff quantity, it helps to filter pollutants generating by vehicular use of the surface.

The composition and area of grassed modular grid pavement as depicted by the flow control BMP site plan and design details must be maintained and may not be changed without written approval either from the King County Water and Land Resources Division or through a future development permit from King County.

Grassed modular grid pavement must be inspected after one major storm each year to make sure it is working properly. Prolonged ponding or standing water on the pavement surface is a sign that the system defective and may need to be replaced. If this occurs, contact the pavement installer or the King County Water and Land Resources Division for further instructions. The grassed surface of the pavement must be regularly mowed and maintained in a good condition. Bare spots must be replanted in the spring or fall.

DRAFT

C.2.7 RAINWATER HARVESTING

Rainwater harvesting means the collection and storage of roof runoff for domestic or irrigation uses. Rainwater harvesting systems include a collection area, a filter, a storage device and an outflow device. Storage may be above ground or below grade and may consist of tanks or vaults. Example configurations are shown in Figure C.2.7.A (p. C-68) and Figure C.2.7.B (p. C-68). The stored water may be used for any domestic purpose including irrigation. The distribution system may be gravity or pumped.

Applicable Surfaces

Subject to the minimum design requirements and specifications in this section, rainwater harvesting systems may be used with any roof area.

Design Considerations

Provisional specifications available in the State UBC for commercial rainwater systems may be used for guidance in designing the various elements of a non-commercial system. *Note that a water right may be required to collect and use rainwater.*

Operation and Maintenance

See Section C.2.7.3 (p. C-69) and Minimum Design Requirement 2 below.

C.2.7.1 MINIMUM DESIGN REQUIREMENTS

DRAFT

All of the following requirements must be met in order for rainwater harvesting to be applicable to a ***target impervious surface***:

1. The system must be designed to collect and use at least 95% of the average annual runoff volume from the ***target impervious surface***. To show this, **water balance calculations** must be submitted with the small project drainage plan. Such calculations may be prepared by the system's manufacturer or installer. *Note: the area of roof directed to the system must be matched to the system's capacity. Additional roof area shall not be connected to the system. Overloading the system will cause the storage to fill in the fall and overflow in the winter when flow mitigation is needed most.*
2. To assure the system functions as designed and provides the required stormwater management, **system-specific maintenance and operation instructions** must be submitted with the small project drainage plan and approved by DDES. Such instructions should be prepared by the system's manufacturer or installer.
3. A minimum 5-foot **setback** shall be maintained between any part of the rainwater harvesting system and any property line.

C.2.7.2 EXAMPLE SIZING CALCULATION

Target impervious surface: 1,000 square feet of roof area

Desired use: Use system to store roof runoff for summer irrigation

Amount of runoff: Assume an average annual runoff depth of 30 inches (2.5 feet) for the King County area based on an annual average precipitation of 36 inches

Storage Volume = 1,000 square feet x 2.5 feet runoff depth = 2,500 cubic feet or 20,000 gallons

FIGURE C.2.7.A TYPICAL ABOVE GROUND RESERVOIR CONFIGURATION (STENSROD, 1978)

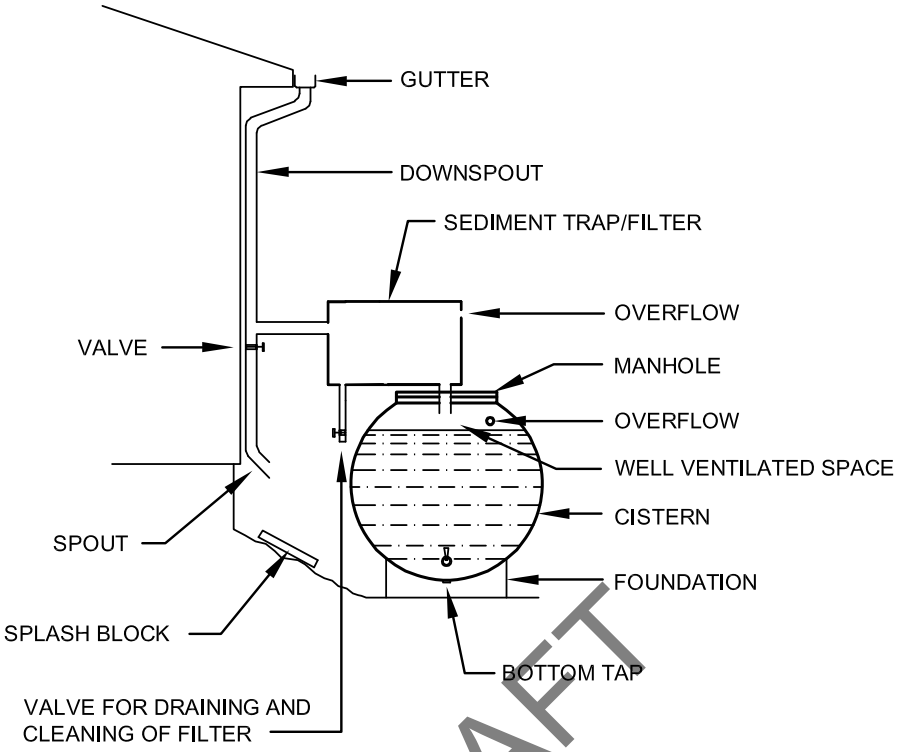

DRAFT

FIGURE C.2.7.B VARIOUS POSSIBLE RESERVOIR CONFIGURATIONS (STENSROD, 1978)

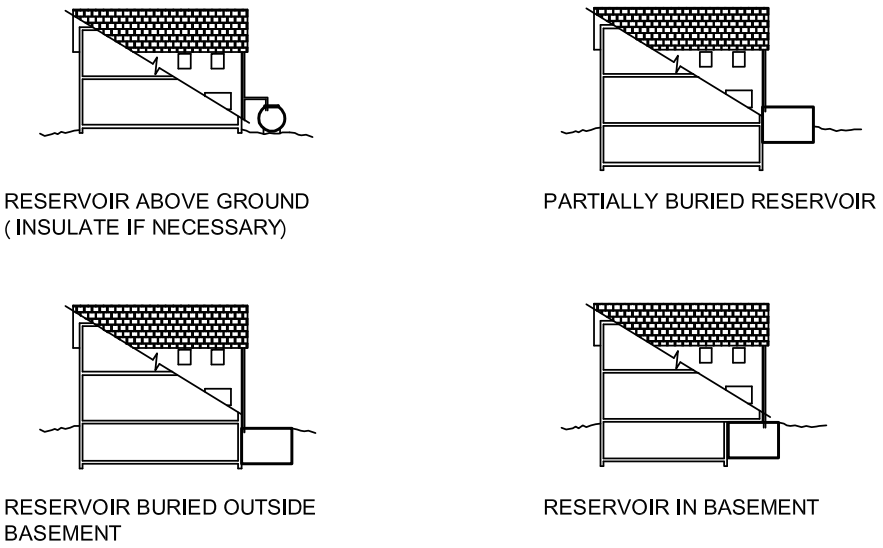

C.2.7.3 MAINTENANCE INSTRUCTIONS FOR RAINWATER HARVESTING

If the rainwater harvesting flow control BMP is proposed for a project, the following maintenance and operation instructions must be incorporated into the maintenance and operation instructions required per Minimum Design Requirement 2. All such instructions must be recorded as an attachment to the required **declaration of covenant and grant of easement** per Requirement 3 of Section C.1.3.3 (p. C-19). The intent of these instructions is to explain to future property owners, the purpose of the BMP and how it must be maintained and operated. These instructions are intended to be a minimum; DDES may require additional instructions based on site-specific conditions or manufacturer's recommendations. Also, as the County gains more experience with the maintenance and operation of these BMPs, future updates to these instructions will be posted on King County's *Surface Water Design Manual* website.

❑ TEXT OF INSTRUCTIONS

Your property contains a stormwater management flow control BMP (best management practice) called "rainwater harvesting," which was installed to minimize the stormwater runoff impacts of impervious surface on your property. Rainwater harvesting is a means for the collection and storage of roof runoff for domestic or irrigation use. Rainwater harvesting systems include a collection area, a filtering system, a storage device, and an outflow device.

The size, components, and configuration of the rainwater system as depicted by the flow control BMP site plan and design details must be maintained and may not be changed without written approval either from the King County Water and Land Resources Division or through a future development permit from King County.

The collection area (e.g., roof) should be routinely inspected for debris and other material that could impede the entrance and/or exit of surface flows. The filtering system should be periodically inspected for effectiveness and replaced or replenished as recommended by the manufacturer. The storage device must be drained completely during the dry season (May 1st - September 30th) in order to provide the needed capacity for an entire wet season. A maintenance log should be kept on site with the aforementioned information and dates of maintenance performance. King County inspection staff may request to view the maintenance log at any time.

DRAFT

C.2.8 VEGETATED ROOF

Vegetated roofs (also called green roofs) consist of a pervious growing medium, plants and a moisture barrier. There are currently several different proprietary systems available that use different media types and thickness. Figure C.2.8.A (p. C-71) shows a typical cross-section, but actual design specifications should come from the manufacturer and installer. The benefits of this BMP are reduced runoff peaks and volumes resulting from the increased water storage provided by the soil and the increased evapotranspiration provided by the vegetation.

Applicable Surfaces

Subject to the minimum design requirements and specifications in this section, vegetated roof systems may be applied to any roof area.

Design Considerations

The roof must be designed to carry the added load of a vegetated roof system; therefore design by a structural engineer may be needed.

Operation and Maintenance

See Section C.2.8.3 (p. C-71).

C.2.8.1 MINIMUM DESIGN REQUIREMENTS

DRAFT

All of the following requirements must be met in order for a vegetated roof to be applicable to a ***target impervious surface***:

1. A 60- to 80-mil reinforced PVC **membrane** must be placed on the roof surface to provide waterproofing and protect against root penetration, or if the roof is asphalt-based, the membrane must be high-density polyethylene (HDPE).
2. If the roof surface is flat or has a pitch flatter than 1 in 12, an **underdrain system** or layer must be provided to drain excess water away from the root zone of the soil layer.
3. The **growing medium** must have the capacity to store a minimum depth of 3 inches of water for full BMP credit, partial credit will be given for reduced storage.
4. The **soil layer** must be adequately contained on the roof with sidewalls or other appropriate means.
5. The **composition** of the soil layer must be confirmed by a ***civil engineer*** as meeting the desired soil storage and the maximum allowable loading specified by the structural engineer.
6. Grass or other **vegetative cover** suitable for shallow soils and harsh roof conditions (e.g., various species of *sedum*, *sempervivum*, *creeping thyme*, *allium*, *phloxes*, *anntenaria*, *armeria*, and *aubrieta*) shall be used.
7. Vegetated roofs must not be subject to any use that would significantly **compact** the soil.
8. Provision must be made for **supplemental irrigation** during the first dry season to ensure plant survival, replacing any dead plants, and removal of weeds and leaves, clearing drain inlets.

C.2.8.2 EXAMPLE SIZING CALCULATION

Target impervious surface area: 1,000 square feet.

Proposed vegetated roof system provides 1.5 inches storage.

Required vegetated roof area = 1000 x 3 ÷ 1.5 = 2,000 square feet.

FIGURE C.2.8.A TYPICAL VEGETATED ROOF CROSS-SECTION

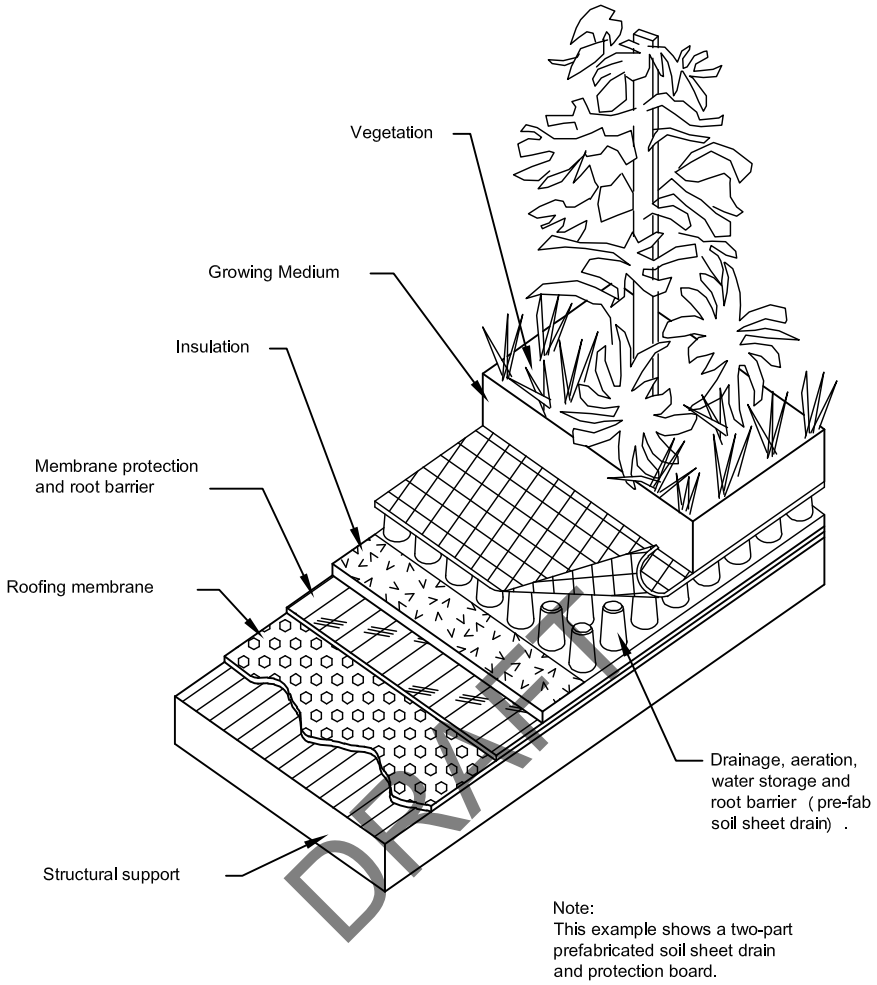

C.2.8.3 MAINTENANCE INSTRUCTIONS FOR VEGETATED ROOFS

If the vegetated roof flow control BMP is proposed for a project, the following maintenance and operation instructions, plus any provided by the manufacturer or installer, must be recorded as an attachment to the required **declaration of covenant and grant of easement** per Requirement 3 of Section C.1.3.3 (p. C-19). The intent of these instructions is to explain to future property owners, the purpose of the BMP and how it must be maintained and operated. These instructions are intended to be a minimum; DDES may require additional instructions based on site-specific conditions or manufacturer's recommendations. Also, as the County gains more experience with the maintenance and operation of these BMPs, future updates to these instructions will be posted on King County's *Surface Water Design Manual* website.

❑ TEXT OF INSTRUCTIONS FOR VEGETATED ROOFS

Your property contains a stormwater management flow control BMP (best management practice) called a "vegetated roof," which was installed to minimize the stormwater runoff impacts of the impervious surfaces on your property. Vegetated roofs (also called green roofs) consist of a pervious growing medium, plants, and a moisture barrier. The benefits of this device are a reduction in runoff peaks and volumes due to the storage capabilities of the soil and increased rate of evapotranspiration.

The composition and area of vegetated roof as depicted by the flow control BMP site plan and design details must be maintained and may not be changed without written approval either from the King County Water and Land Resources Division or through a future development permit from King County. Vegetated roofs must not be subject to any use that would significantly compact the soil.

Vegetated roofs must be inspected annually for physical defects and to make sure the vegetation is in good condition. If erosion channels or bare spots are evident, they should be stabilized with additional soil similar to the original material. A supplemental watering program may be needed the first year to ensure the long-term survival of the roof's vegetation. Vegetation should be maintained as follows: (1) replace all dead vegetation as soon as possible; (2) remove fallen leaves and debris; (3) remove all noxious vegetation when discovered; and (4) manually weed without herbicides or pesticides.

DRAFT

C.2.9 REDUCED IMPERVIOUS SURFACE CREDIT

Reduced impervious surface credit means a credit toward meeting impervious surface flow control BMP requirements through application of techniques that result in less impervious surface coverage than is typically constructed or allowed for a particular land use. The credit may be used to mitigate for impervious surface to which flow control BMPs must be applied as specified by BMP Requirement 3 in either Section C.1.3.1.A (p. C-14) or Section C.1.3.2.A (p. C-16).

To receive the credit, a reduction in impervious surface below established norms must be assured through covenant and/or alternative design of impervious surfaces as described in the subsections below. For every square foot of reduced impervious surface assured, an equal area of **actual proposed *target impervious surface*** may be credited as mitigated, provided the runoff from the credited area is either directed to vegetated pervious areas on the ***site*** or discharged through a perforated pipe connection per Section C.2.11 (p. C-79).

Applicable Surfaces

Subject to the minimum design requirements and specifications in this section, the reduced impervious surface credit may be applied to any impervious surface such as a roof, driveway, parking area, or road.

Operation and Maintenance

See Section C.2.9.7 (p. C-76).

C.2.9.1 MINIMUM DESIGN REQUIREMENTS

DRAFT

All of the following requirements must be met in order for the reduced impervious surface credit to be applicable to a ***target impervious surface***:

1. **One or more of the following techniques** must be used to reduce, restrict, or otherwise mitigate for impervious surface subject to flow control BMPs:
   - **Restricted footprint** (see Section C.2.9.2 below)
   - **Wheel strip driveways** (see Section C.2.9.3, p. C-74)
   - **Minimum disturbance foundation** (see Section C.2.9.4, p. C-74)
   - **Open grid decking over pervious surface** (see Section C.2.9.5, p. C-74)
2. The area of ***target impervious surface*** **credited as mitigated** by the reduced impervious surface credit must meet all of the following requirements:
   a) The area credited as mitigated must be no more than 10,000 square feet on any one ***site*/lot** unless the surface is served by a flow control facility designed by a ***civil engineer*** in accordance with Section 1.2.3 of the *SWDM*.
   b) Any runoff from the area credited as mitigated must be directed to vegetated pervious areas on the ***site*/lot** or discharged through a perforated pipe connection per Section C.2.11 (p. C-79).
   c) Any portion of the area credited as mitigated that is ***pollution-generating impervious surface*** must be less than 5,000 square feet on any one ***site*/lot** unless the surface is served by a water quality treatment facility designed by a ***civil engineer*** in accordance with Section 1.2.8 of the *SWDM*.

C.2.9.2 RESTRICTED FOOTPRINT

Restricted footprint means the recording of a covenant that limits the amount of future impervious surface coverage on a ***site*/lot** to an amount less than the norm as specified below:

1. For ***sites*/lots** that are **smaller than 22,000 square feet**, any recorded limit on total impervious surface less than a norm of 4,000 square feet or the maximum allowed by the ***site*/lot's** zoning, whichever is smaller, qualifies for a restricted footprint credit equal to the difference in square footage. In other words, for every square foot that the recorded limit is below the norm, an equal area of **actual proposed *target impervious surface*** is credited as mitigated subject to Minimum Design Requirement 2 in Section C.2.9.1.
2. For ***sites*/lots** that are **between 22,000 square feet and 250,000 square feet**, any recorded limit of total impervious surface in an amount less than a norm of 4,000 square feet or 4% of the ***site*/lot** area, whichever is greater, qualifies for a restricted footprint credit equal to the difference in square footage. For every square foot that the recorded limit is below the norm, an equal area of **actual proposed *target impervious surface*** is credited as mitigated subject to Minimum Design Requirement 2 in Section C.2.9.1.
3. For ***sites*/lots** that are **greater than 250,000 square feet**, no restricted footprint credit is available.

C.2.9.3 WHEEL STRIP DRIVEWAYS

Wheel strip driveways consist of two pavement strips and grass planted in amended soil, all within a "driveway width norm" of 10 feet. Subject to Minimum Design Requirement 2 in Section C.2.9.1, an area of **actual proposed *target impervious surface*** equal to the driveway length times 10 feet of width is credited as mitigated if all of the following requirements are met:

1. The **pavement strips** must be no more than 2.5-feet wide.
2. At least 4 feet of the driveway width must be **amended soil planted with grass**. The amended soil must consist of at least 4 inches of well-rotted compost tilled into the upper 8 inches of the soil between the impervious strips.

DRAFT

C.2.9.4 MINIMUM DISTURBANCE FOUNDATION

Minimum disturbance foundations consist of pile or pier supports such that all or a portion of the finished living space is elevated over a pervious surface. The intent of this system is to provide additional storage for runoff in the soil beneath the structure. Subject to Minimum Design Requirement 2 in Section C.2.9.1, this technique qualifies for a 100% credit if the following requirements are met:

1. The **pervious surface beneath** the elevated portion of the structure must be either undisturbed native soil or amended soil. Any amended soil must consist of at least 4 inches of well-rotted compost tilled into the upper 8 inches of the soil.
2. **Runoff** from the structure must be discharged via downspouts or sheet flow onto a vegetated surface or into a 4 to 6-inch gravel bed within close proximity of the elevated structure. Runoff discharging from downspouts onto a vegetated surface must be via splash blocks.

C.2.9.5 OPEN GRID DECKING OVER PERVIOUS SURFACE

Open grid decking over pervious surface is a steel, plastic, or wood deck with regularly spaced openings suspended over a pervious surface. Such decking may be used as an alternative to impervious surface for such applications as parking or other vehicle use, and/or walkways, etc. This technique qualifies for a 100% credit if the following requirements are met:

1. The pervious surface beneath the decking must be either undisturbed native soil or amended soil.

Any amended soil must consist of at least 4 inches of well-rotted compost tilled into the upper 8 inches of the soil.

2. The full area of decking over pervious surface may be used to qualify for a reduced impervious surface credit subject to Minimum Design Requirement 2 in Section C.2.9.1. This means that for every square foot of decking over pervious surface, an equal amount of ***target impervious surface*** is considered mitigated, except as restricted by Minimum Design Requirement 2 in Section C.2.9.1.
3. The **openings** in the decking must be at least 8% of the surface area and must be evenly distributed across the surface such that there are at least 2 openings per square foot.
4. The decking and its supports shall be designed by a ***civil engineer*** or structural engineer as deemed necessary by DDES.

C.2.9.6 EXAMPLE CREDIT CALCULATIONS

A project proposes to add 3,500 square feet of impervious surface to a 2-acre lot, which includes a 2,575 square-foot house (footprint) with a 1,600 square foot minimum disturbance foundation, a 600 square-foot parking pad, 25-foot-long wheel strip driveway (125 square feet), and a 200 square-foot wood deck. The 3,500 sf of impervious surface includes the two concrete wheel strips, which are each 2.5 feet wide (125 sf). The project is subject to the large lot BMP requirements in Section C.1.3.2, which means all new impervious surface (i.e., ***target impervious surface***) must be mitigated with flow control BMPs. Full dispersion and full infiltration are not applicable or feasible. Therefore, other flow control BMPs in Section C.2 must be used to mitigate all 3,500 square feet of proposed ***target impervious surface***.

DRAFT

Restricted Footprint

Because the 3,500 square feet of proposed impervious surface is less than the established norm for the lot of 4,000 square feet, the project is eligible for a reduced footprint credit if a covenant is recorded that limits impervious surface coverage to the 3,500 square feet proposed.

Therefore, the area of ***target impervious surface*** credited as mitigated is: 4,000 sf – 3,500 sf = **500 sf**

This leaves a remaining impervious area of 3,000 sf that must be mitigated by other flow control BMPs.

Wheel Strip Driveway

If the wheel strip driveway complies with the specifications in Section C.2.9.3, an area of actual proposed ***target impervious surface*** equal to the area that would be covered by a 10-foot-wide driveway (i.e., the established "driveway width norm") is credited as mitigated. The wheel strips themselves are considered part of the actual proposed ***target impervious surface*** area being credited as mitigated.

Thus, the area of ***target impervious surface*** credited as mitigated is: 10 ft x 25 ft = **250 sf**

This leaves a remaining impervious area of 2,750 sf that must be mitigated by other flow control BMPs.

Minimum Disturbance Foundation

If the 1,600 square foot minimum disturbance foundation complies with the specifications in Section C.2.9.4, the foundation area is credited at 100%.

Thus, the area of ***target impervious surface*** credited as mitigated is: **1,600 sf**

This leaves a remaining impervious area of 1,150 sf that must be mitigated by other flow control BMPs.

Open Grid Decking Over Pervious Surface

If the 200 square-foot wood deck complies with the specifications in C.2.9.5, the deck is credited at 100%.

Thus, the total area of ***target impervious surface*** credited as mitigated is: **200 sf**

This leaves a remaining impervious area of 950 sf that must be mitigated by other flow control BMPs.

C.2.9.7 MAINTENANCE INSTRUCTIONS

If a reduced impervious surface flow control BMP is proposed for a project, one or more of the following sets of maintenance and operation instructions, whichever are applicable, must be recorded in or as an attachment to the required **declaration of covenant and grant of easement** per Requirement 3 of Section C.1.3.3 (p. C-19). The intent of these instructions is to explain to future property owners, the purpose of the BMP and how it must be maintained and operated. These instructions are intended to be a minimum; DDES may require additional instructions based on site-specific conditions. Also, as the County gains more experience with the maintenance and operation of these BMPs, future updates to the instructions will be posted on the King County's *Surface Water Design Manual* website.

❑ TEXT OF INSTRUCTIONS FOR RESTRICTED FOOTPRINT

Your property contains a stormwater management flow control BMP (best management practice) known as "restricted footprint," the practice of restricting the amount of impervious surface that may be added to a property so as to minimize the stormwater runoff impacts caused by impervious surface. The total impervious surface on your property may not exceed _____ square feet without written approval either from the King County Water and Land Resources Division or through a future development permit from King County.

❑ TEXT OF INSTRUCTIONS FOR WHEEL STRIP DRIVEWAYS

Your property contains a stormwater management flow control BMP (best management practice) called a "wheel strip driveway," which was installed to minimize or mitigate for the stormwater runoff impacts of some or all of the impervious surfaces on your property. The placement and composition of the wheel strip driveway as depicted by the flow control BMP site plan and design details must be maintained and may not be changed without written approval either from the King County Water and Land Resources Division or through a future development permit from King County.

DRAFT

❑ TEXT OF INSTRUCTIONS FOR MINIMUM DISTURBANCE FOUNDATIONS

Your property contains a stormwater management flow control BMP (best management practice) known as a "minimum disturbance foundation," which was installed to minimize or mitigate for the stormwater runoff impacts of some or all of the impervious surfaces on your property. This means that all or a portion of the finished living space in your house is elevated over a pervious surface through the use of piers or piles. The pervious surface is intended to provide additional capacity to absorb and store the stormwater runoff from your roof and surrounding areas.

The design of this system as depicted by the flow control BMP site plan and design details must be maintained and may not be changed without written approval either from the King County Water and Land Resources Division or through a future development permit from King County. In addition, the pervious surface beneath the elevated portion of your house must not be used in manner that compacts the soil.

❑ TEXT OF INSTRUCTIONS FOR OPEN GRID DECKING OVER PERVIOUS SURFACE

Your property contains a stormwater management flow control BMP (best management practice) called "open grid decking over pervious surface," which was installed to minimize or mitigate for the stormwater runoff impacts of some or all of the impervious surfaces on your property. The decking has evenly spaced openings that allow rain water to reach the uncompacted soil below, where it has an opportunity to soak into the ground.

The area and openings of the decking as depicted by the flow control BMP site plan and design details must be maintained and may not be changed without written approval either from the King County Water and Land Resources Division or through a future development permit from King County. In addition, the pervious surface beneath the decking must not be used in manner that compacts the soil.

C.2.10 NATIVE GROWTH RETENTION CREDIT

Native growth retention credit means a credit toward meeting impervious surface flow control BMP requirements through voluntary preservation of ***native vegetated surface*** on otherwise unencumbered land that is flat to moderately sloped. The credit may be used to mitigate for impervious surface to which flow control BMPs must be applied as specified by BMP Requirement 3 in Section C.1.3.1.A (p. C-14) or Section C.1.3.2.A (p. C-16).

To receive the credit, at least 3.5 square feet of ***native vegetated surface*** must be preserved for every square foot of impervious surface to be mitigated by the ***native vegetated surface***. In other words, for every 3.5 square feet of native vegetated pervious surface preserved, one square foot of ***target impervious surface*** may be credited as mitigated, provided the runoff from the credited area is either directed to vegetated pervious areas on the ***site*** or discharged through a perforated pipe connection per Section C.2.11 (p. C-79).

Applicable Surfaces

Subject to the minimum design requirements and specifications in this section, the native growth retention credit may be applied to any impervious surface such as a roof, driveway, parking area, or road.

Operation and Maintenance

See Section C.2.10.3 (p. C-78).

C.2.10.1 MINIMUM DESIGN REQUIREMENTS

DRAFT

All of the following requirements must be met in order for the native growth retention credit to be applicable to a ***target impervious surface***:

1. The area of ***native vegetated surface*** being preserved (*donor area*) to mitigate for ***target impervious surface*** must meet all of the following criteria:
   a) The donor area must be 3.5 times the area of impervious surface being credited as mitigated by the ***native vegetated surface***.
   b) The donor area must consist of ***native vegetated surface***, which means that the area may be either existing forest or forest created in accordance with the specifications for "native vegetated landscape" in Section C.2.1.8 (p. C-37).
   c) The donor area must be **in addition to any required set-asides** for recreation, critical areas (and applicable buffers), or to meet the clearing standards in KCC 16.82.150.
   d) The donor area must not **slope** more than 15%.
   e) The donor area must be set aside as "**native growth retention area**" as specified in Section C.2.1.9 (p. C-39). *Note, this area may be used to manage dispersed stormwater from other areas within the **site**.*
2. The area of ***target impervious surface*** **credited as being mitigated** by the native growth retention credit must meet all of the following requirements:
   a) The area credited as mitigated must be no more than 10,000 square feet on any one ***site*** unless the surface is served by a flow control facility designed by a ***civil engineer*** in accordance with Section 1.2.3 of the *SWDM*.
   b) Any runoff from the area credited as mitigated must be directed to vegetated pervious areas on the ***site*/lot** or discharged through a perforated pipe connection per Section C.2.11 (p. C-79).

c) Any portion of the area credited as mitigated that is ***pollution-generating impervious surface*** must be less than 5,000 square feet on any one ***site*** unless the surface is served by a water quality treatment facility designed by a ***civil engineer*** in accordance with Section 1.2.8 of the *SWDM*.

C.2.10.2 EXAMPLE SIZING CALCULATION

Area of ***target impervious surface*** to be credited as mitigated: 500 square feet

Donor area of ***native vegetated surface*** that must be preserved: 500 x 3.5 = 1,750 square feet

C.2.10.3 MAINTENANCE INSTRUCTIONS

If the native growth retention credit flow control BMP is proposed for a project, the following maintenance and operation instructions must be recorded as an attachment to the required **declaration of covenant and grant of easement** per Requirement 3 of Section C.1.3.3 (p. C-19). The intent of these instructions is to explain to future property owners, the purpose of the BMP and how it must be maintained and operated. These instructions are intended to be a minimum; DDES may require additional instructions based on site-specific conditions. Also, as the County gains more experience with the maintenance and operation of these BMPs, future updates to the instructions will be posted on King County's *Surface Water Design Manual* website.

❑ TEXT OF INSTRUCTIONS

Your property contains a stormwater management flow control BMP (best management practice) known as "native growth retention," the practice of preserving a portion of a property in a native vegetated condition (e.g., forest) so as to minimize increases in stormwater runoff from clearing and to offset the stormwater runoff impacts caused by impervious surfaces on your property. This native vegetated area on your property was set aside by covenant as "native growth retention area."

The "native growth retention area" is delineated on the flow control BMP site plan attached to the covenant. The trees, vegetation, ground cover, and soil conditions in this area may not be disturbed, except as allowed by the following provisions:

1. Trees may be harvested in accordance with a King County-approved forest management plan.
2. Individual trees that have a structural defect due to disease or other defects, and which threaten to damage a structure, road, parking area, utility, or place of employment or public assembly, or block emergency access, may be topped, pruned, or removed as needed to eliminate the threat.
3. Dead or fallen trees, tree limbs within ten feet of the ground, and branches overhanging a residence may be removed to reduce the danger of wildfire.
4. Noxious weeds (i.e., plant species listed on the State noxious weed list in Chapter 16-750 WAC) and invasive vegetation (i.e., plant species listed as obnoxious weeds on the noxious weed list adopted by the King County Department of Natural Resources and Parks) may be removed.
5. Passive recreation uses and related facilities, including pedestrian, equestrian community and bicycle trails, nature viewing areas, fishing and camping areas, and other similar uses that do not require permanent structures, are allowed if clearing and soil compaction associated with these uses and facilities does not exceed eight percent of the native growth retention area.

DRAFT

C.2.11 PERFORATED PIPE CONNECTION

Perforated pipe connections are intended to convey concentrated runoff from impervious surfaces (usually roof runoff) directly to a local drainage system while providing some infiltration of that runoff in the process. They are required for any pipe connection of roof downspouts to the local drainage system regardless of the extent to which flow control BMPs are required or being used onsite. Perforated pipe connections are intended to provide for some infiltration during drier periods (late spring through early fall), which may help dampen the flashiness of stream flows in developed areas and provide some groundwater recharge. During the wet winter months, however, this BMP likely provides little or no flow control benefits. Therefore, it is not credited with mitigating ***target impervious surface***.

Applicable Surfaces

Subject to the minimum design requirements below, the perforated pipe connection may be applied to concentrated runoff from any impervious surface or non-native pervious surface.

Operation and Maintenance

See Section C.2.11.2 (below).

C.2.11.1 MINIMUM DESIGN REQUIREMENTS

Figure C.2.11.A (p. C-80) illustrates a perforated pipe connection for a typical single family residence. Impervious areas larger than 10,000 square feet and non-native pervious areas larger than 35,000 square feet may require larger pipe to adequately convey flows and should be designed by a ***civil engineer***. Perforated pipe connections must be installed according to the following requirements:

DRAFT

1. Where possible, the perforated pipe connection must be **placed in native soil** to maximize infiltration of water, and must not be located under impervious surfaces, except as a last resort.
2. The **gravel filled trench** must be at least 10-feet in length for every 10,000 square feet of impervious surface or 35,000 square feet of non-native pervious surface from which runoff is conveyed.
3. The perforated portion of the system may not be placed in a critical area **buffer** or on **slopes** steeper than 25%. Any proposed placement of the perforated portion on slopes steeper than 15% or within 50 feet of a ***steep slope hazard area*** or ***landslide hazard area*** must be approved by a ***geotechnical engineer*** or ***engineering geologist*** unless otherwise approved by the DDES staff geologist.
4. For ***sites*** with **septic systems**, the perforated portion of the system must be down slope of the drainfield primary and reserve areas. DDES permit review staff can waive this requirement if ***site*** topography clearly prohibits subsurface flows from intersecting the drainfield.
5. The perforated pipe connection must not create **flooding or erosion impacts** as determined by DDES. If the system discharges toward or is near a ***landslide hazard area***, ***erosion hazard area***, ***steep slope hazard area***, or a slope steeper than 15%, DDES may require evaluation and approval of the proposal by a ***geotechnical engineer*** or ***engineering geologist***.

C.2.11.2 MAINTENANCE INSTRUCTIONS

If the perforated pipe connection flow control BMP is required for a project, the following maintenance and operation instructions must be recorded as an attachment to the required **declaration of covenant and grant of easement** per Requirement 3 of Section C.1.3.3 (p. C-19). The intent of these instructions is to explain to future property owners, the purpose of the BMP and how it must be maintained and operated. These instructions are intended to be a minimum; DDES may require additional instructions based on site-specific conditions. Also, as the County gains more experience with the maintenance and operation of these BMPs, future updates to the instructions will be posted on King County's *Surface Water Design Manual* website.

❑ TEXT OF INSTRUCTIONS

Your property contains a stormwater management flow control BMP (best management practice) called a "perforated pipe connection," which was installed to reduce the stormwater runoff impacts of some or all of the impervious surface on your property. A perforated pipe connection is a length of drainage conveyance pipe with holes in the bottom, designed to "leak" runoff, conveyed by the pipe, into a gravel filled trench where it can be soaked into the surrounding soil. The connection is intended to provide opportunity for infiltration of any runoff that is being conveyed from an impervious surface (usually a roof) to a local drainage system such as a ditch or roadway pipe system.

The size and composition of the perforated pipe connection as depicted by the flow control BMP site plan and design details must be maintained and may not be changed without written approval either from the King County Water and Land Resources Division or through a future development permit from King County. The soil overtop of the perforated portion of the system must not be compacted or covered with impervious materials.

FIGURE C.2.11.A PERFORATED PIPE CONNECTION FOR A SINGLE FAMILY RESIDENCE

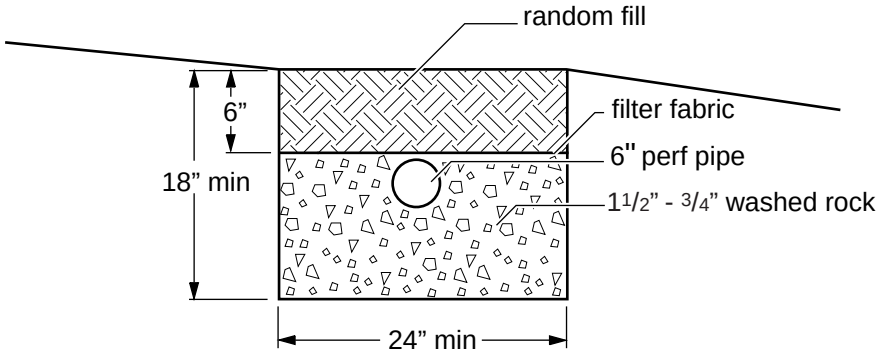

TRENCH X-SECTION
NTS

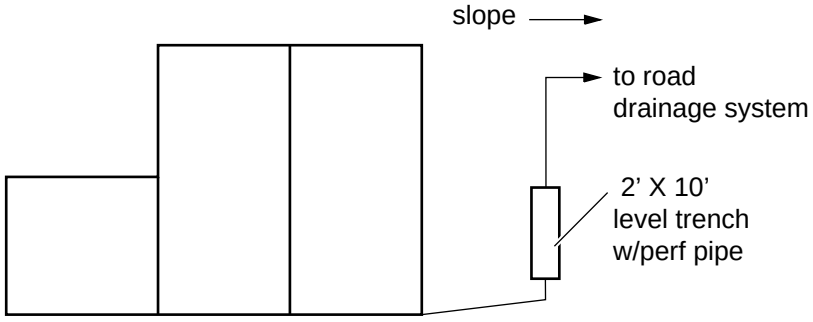

PLAN VIEW OF ROOF
NTS

C.3 EROSION AND SEDIMENT CONTROL (ESC) MEASURES

This section presents the specifications for the kinds of the ESC measures applicable to **small *project sites*** as allowed by the County's *ESC Standards* (Detached Appendix D of the *King County Surface Water Design Manual*). For projects in Small Project Drainage Review, these measures may be used if no more than ~~3~~ 1 acre~~s~~ of soil will be disturbed by the project. Other ESC measures may be allowed or required by DDES if these are inappropriate for the project or fail to contain sediment on the ***project site***. A description of other measures and a more detailed description of those included here can be found in the *ESC Standards*. Projects that **disturb ~~3~~ 1 acre~~s~~ or more** of soil will require an ESC plan developed by a ***civil engineer*** under a Targeted Drainage Review.

Intent of ESC Measures

The intent of ESC measures is to prevent, to the maximum extent practicable, the transport of sediment and other construction-related pollutants to streams, wetlands, lakes, drainage systems, and adjacent properties during and after construction. Erosion of disturbed areas on construction sites can result in excessive sediment transport to adjacent properties and to surface waters. This sediment can result in major adverse impacts, such as flooding due to obstructed drainage ways, smothering of salmonid spawning beds, creation of algal blooms in lakes, and violation of State water quality standards for turbidity. In addition to sediment, other construction-related pollutants can be generated by uncovered waste materials, stockpiles, and demolition debris; de-watering; maintenance and operation of heavy equipment; chemical spills; oil spills; placement of concrete; and application of fertilizers and pesticides. Such pollutants can be toxic to both fish and humans and may violate State water quality standards and the prohibited discharges section of KCC 9.12. Stabilization of the ***site*** after construction and prior to the wet season is also important to preventing these impacts.

DRAFT

Organization of Section C.3

This section is organized as follows:

- "Stabilized Construction Entrance," Section C.3.1 (p. C-82)
- "Mulching," Section C.3.2 (p. C-83)
- "Nets and Blankets," Section C.3.3 (p. C-85)
- "Plastic Covering," Section C.3.4 (p. C-88)
- "Mark Clearing Limits/Minimize Clearing," Section C.3.5 (p. C-89)
- "Silt Fence," Section C.3.6 (p. C-89)
- "Vegetated Strip," Section C.3.7 (p. C-91)
- "Triangular Silt Dike," Section C.3.8 (p. C-92)
- "Storm Drain Inlet Protection~~Storm Drain Inlet Protection~~," Section C.3.9 (p. C-93)
- "Seeding," Section C.3.10 (p. C-99)
- "Sodding," Section C.3.11, (p. C-100)
- "Interceptor Dikes and Swales," Section C.3.12 (p. C-101)
- "Ditches~~Ditches~~," Section C.3.13 (p. C-103)
- "Pipe Slope Drain," Section C.3.14 (p. C-104)
- "Dewatering Control," Section C.3.15 (p. C-105)
- "Control of Other Pollutants~~Control of Other Pollutants~~," Section C.3.16 (p. C-106)

~~The ESC measures in this section are divided into two categories, those used during construction and those used after. Those measures used during construction are referred to as temporary ESC measures while those used after construction are referred to as permanent or final stabilization measures. Thus, the section is organized as follows:~~

- ~~Section C.3.1, "Temporary ESC" (p. C-79)~~
- ~~Section C.3.2, "Final Stabilization" (p. C-90)~~

~~C.3.1 TEMPORARY ESC~~

~~Temporary ESC measures are used during construction to minimize the amount of sediment mobilized and trap any mobilized sediment before it leaves the ***project site***. This section presents the requirements and specifications for those temporary ESC measures typically applied to projects in Small Project Drainage Review. They include the following:~~

The above measures must be implemented as needed to prevent the discharge of sediment-laden water from the construction site. Proposed measures must be shown on the small site ESC plan required to be submitted with the small project drainage plans. Site-specific conditions during construction may require additional measures as deemed necessary by DDES. As noted in Section C.3 above, other ~~temporary~~ ESC measures found in Appendix D of the *SWDM* may be needed or may be more appropriate for the ***project site*** as determined by DDES.

C.3.1 STABILIZED CONSTRUCTION ENTRANCE

DRAFT

Purpose

Construction entrances are stabilized to reduce the amount of sediment transported onto paved roads by motor vehicles or runoff by constructing a stabilized pad of quarry spalls at the entrances to construction sites.

Application

Construction entrances shall be stabilized wherever traffic will be leaving a construction site and traveling on paved roads or other paved areas within 1,000 feet of the ***site***.

Design and Installation Specifications

1. See Figure C.3.1.A for details.
2. A separation geotextile shall be placed under the spalls to prevent fine sediment from pumping up into the rock pad. The geotextile shall meet the following standards:

Grab Tensile Strength (ASTM D4751)	200 psi min.
Grab Tensile Elongation (ASTM D4632)	30% max.
Mullen Burst Strength (ASTM D3786-80a)	400 psi min.
AOS (ASTM D4751)	20-45 (U.S. standard sieve size)

3. Hog fuel (wood based mulch) may be substituted for or combined with quarry spalls in areas that will not be used for permanent roads. The effectiveness of hog fuel is highly variable, but it has been used successfully on many construction sites. It generally requires more maintenance than quarry spalls. Hog fuel is not recommended for entrance stabilization in urban areas. The inspector may at any time require the use of quarry spalls if the hog fuel is not preventing sediment from being tracked onto

pavement or if the hog fuel is being carried onto pavement. Hog fuel is prohibited in permanent roadbeds because organics in the subgrade soils cause difficulties with compaction.

4. Whenever possible, the entrance shall be constructed on a firm, compacted subgrade. This can substantially increase the effectiveness of the pad and reduce the need for maintenance.

Maintenance

1. Quarry spalls (or hog fuel) shall be added if the pad is no longer in accordance with the specifications.
2. If the entrance is not preventing sediment from being tracked onto pavement, then alternative measures to keep the streets free of sediment shall be used. This may include street sweeping, an increase in the dimensions of the entrance, or the installation of a wheel wash. If washing is used, it shall be done on an area covered with crushed rock, and wash water shall drain to a sediment trap or pond.
3. Any sediment that is tracked onto pavement shall be removed immediately by sweeping. The sediment collected by sweeping shall be removed or stabilized onsite. The pavement shall not be cleaned by washing down the street, except when sweeping is ineffective and there is a threat to public safety. If it is necessary to wash the streets, a small sump must be constructed. The sediment would then be washed into the sump where it can be controlled ~~and discharged appropriately~~. Wash water must be pumped back onto the ***site*** and can not discharge to systems tributary to surface waters.
4. Any quarry spalls that are loosened from the pad and end up on the roadway shall be removed immediately.

FIGURE C.3.1.A STABILIZED CONSTRUCTION ENTRANCE

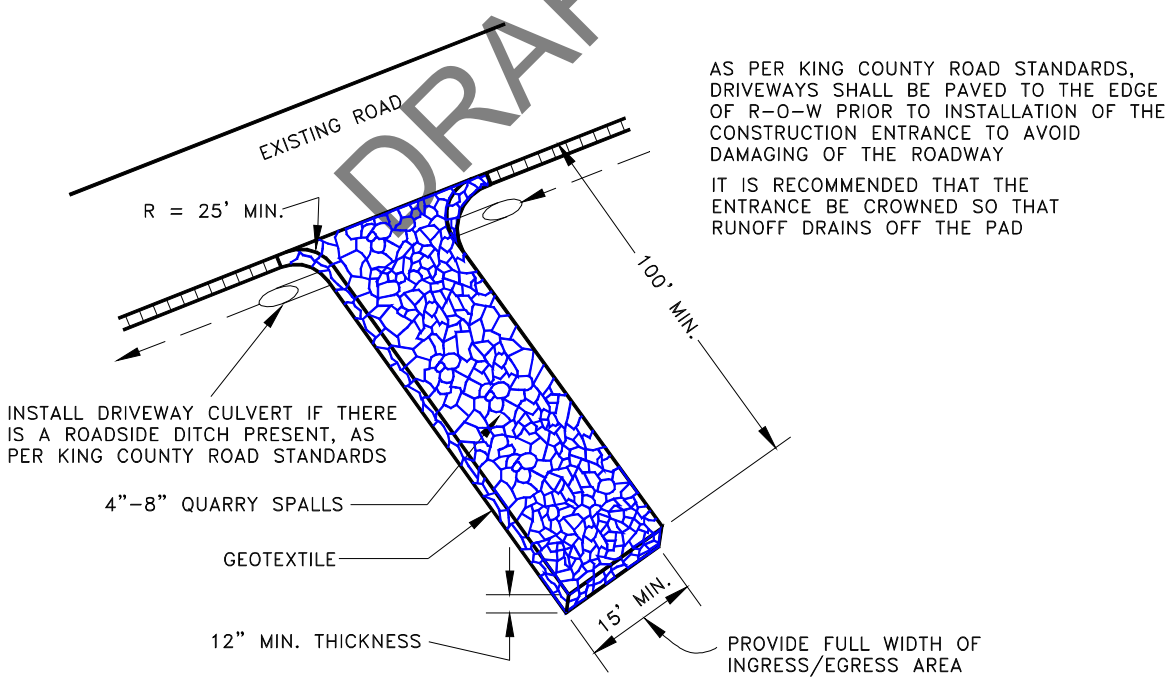

C.3.2 MULCHING

Purpose

The purpose of mulching soils is to provide immediate temporary protection from erosion. Mulch also enhances plant establishment by conserving moisture, holding fertilizer, seed, and topsoil in place, and

moderating soil temperatures. There is an enormous variety of mulches that may be used. Only the most common types are discussed in this section.

Conditions of Use

As a temporary cover measure, mulch should be used:

1. On disturbed areas that require cover measures for less than 30 days
2. As a cover for seed during the wet season and during the hot summer months
3. During the wet season on slopes steeper than 3H:1V with more than 10 feet of vertical relief.

Design and Installation Specifications

For mulch materials, application rates, and specifications, see Table C.3.2.A. *Note: Thicknesses may be increased for disturbed areas in or near critical areas or other areas highly susceptible to erosion.*

Maintenance Standards

1. The thickness of the mulch cover must be maintained.
2. Any areas that experience erosion shall be re-mulched and/or protected with a net or blanket. If the erosion problem is drainage related, then the drainage problem shall be assessed and alternate drainage such as interceptor swales may be needed to fix the problem and the eroded area re-mulched.

DRAFT

TABLE C.3.2.A MULCH STANDARDS AND GUIDELINES			
Mulch Material	**Quality Standards**	**Application Rates**	**Remarks**
Straw	Air-dried; free from undesirable seed and coarse material	2"-3" thick; 2-3 bales per 1000 sf or 2-3 tons per acre	Cost-effective protection when applied with adequate thickness. Hand-application generally requires greater thickness than blown straw. Straw should be crimped to avoid wind blow. The thickness of straw may be reduced by half when used in conjunction with seeding.
Wood Fiber Cellulose	No growth inhibiting factors	Approx. 25-30 lbs per 1000 sf or 1000-1500 lbs per acre	Shall be applied with hydromulcher. Shall not be used without seed and tackifier unless the application rate is at least doubled. Some wood fiber with very long fibers can be effective at lower application rates and without seed or tackifier.
Compost	No visible water or dust during handling. Must be purchased from supplier with Solid Waste Handling Permit.	2" thick min.; approx. 100 tons per acre (approx. 800 lbs per cubic yard)	More effective control can be obtained by increasing thickness to 3". Excellent mulch for protecting final grades until landscaping because it can be directly seeded or tilled into soil as an amendment. Sources for compost are available from the King County Commission for Marketing Recyclable Materials at (206) 296-4439.
Hydraulic Matrices (Bonded Fiber Matrix)	This mulch category includes hydraulic slurries composed of wood fiber, paper fiber or a combination of the two held together by a binding system. The BFM shall be a mixture of long wood fibers and various bonding agents.	Apply at rates from 3,000 lbs per acre to 4,000 lbs per acre and based on manufacturers recommendations	The BFM shall not be applied immediately before, during or immediately after rainfall so that the matrix will have an opportunity to dry for 24 hours after installation. Application rates beyond 2,500 pounds may interfere with germination and are not usually recommended for turf establishment. BFM is generally a matrix where all fiber and binders are in one bag, rather than having to mix components from various manufacturers to create a matrix. BFMs can be installed via helicopter in remote areas. They are approximately $1,000 per acre cheaper to install.
Chipped Site Vegetation	Average size shall be several inches.	2" minimum thickness	This is a cost-effective way to dispose of debris from clearing and grubbing, and it eliminates the problems associated with burning. Generally, it should not be used on slopes above approx. 10% because of its tendency to be transported by runoff. It is not recommended within 200 feet of surface waters. If seeding is expected shortly after mulch, the decomposition of the chipped vegetation may tie up nutrients important to grass establishment.

DRAFT

C.3.3 NETS AND BLANKETS

Purpose

Erosion control nets and blankets are intended to prevent erosion and hold seed and mulch in place on steep slopes and in channels so that vegetation can become well established. In addition, some nets and blankets can be used to permanently reinforce turf to protect drainage ways during high flows. Nets are strands of material woven into an open, but high-tensile strength net (for example, jute matting). Blankets are strands of material that are not tightly woven, but instead form a layer of interlocking fibers, typically held together by a biodegradable or photodegradable netting (for example, excelsior or straw blankets). They generally have lower tensile strength than nets, but cover the ground more completely. Coir (coconut fiber) fabric comes as both nets and blankets.

Conditions of Use

Erosion control nets and blankets should be used:

1. For permanent stabilization of slopes 2H:1V or greater and with more than 10 feet of vertical relief.
2. In conjunction with seed for final stabilization of a slope, not for temporary cover. However, they may be used for temporary applications as long as the product is not damaged by repeated handling. In fact, this method of slope protection is superior to plastic sheeting, which generates high-velocity runoff.
3. For drainage ditches and swales (highly recommended). The application of appropriate netting or blanket to drainage ditches and swales can protect bare soil from channelized runoff while vegetation is established. Nets and blankets also can capture a great deal of sediment due to their open, porous structure. Synthetic nets and blankets may be used to permanently stabilize channels and may provide a cost-effective, environmentally preferable alternative to riprap.

Design and Installation Specifications

1. See Figure C.3.3.A and Figure C.3.3.B for typical orientation and installation of nettings and blankets. Note: Installation is critical to the effectiveness of these products. If good ground contact is not achieved, runoff can concentrate under the product, resulting in significant erosion.
2. Jute matting must be used in conjunction with mulch. Excelsior, woven straw blankets, and coir (coconut fiber) blankets may be installed without mulch. There are many other types of **erosion control nets and blankets** on the market that may be appropriate in certain circumstances. Other types of products will have to be evaluated individually. In general, most nets (e.g., jute matting) require mulch in order to prevent erosion because they have a fairly open structure. Blankets typically do not require mulch because they usually provide complete protection of the surface.
3. Purely synthetic blankets are allowed but shall only be used for long-term stabilization of waterways. The organic blankets authorized above are better for slope protection and short-term waterway protection because they retain moisture and provide organic matter to the soil, substantially improving the speed and success of re-vegetation.

DRAFT

Maintenance Standards

1. Good contact with the ground must be maintained, and there must not be erosion beneath the net or blanket.
2. Any areas of the net or blanket that are damaged or not in close contact with the ground shall be repaired and stapled.
3. If erosion occurs due to poorly controlled drainage, the problem shall be fixed and the eroded area protected.

FIGURE C.3.3.A WATERWAY INSTALLATION

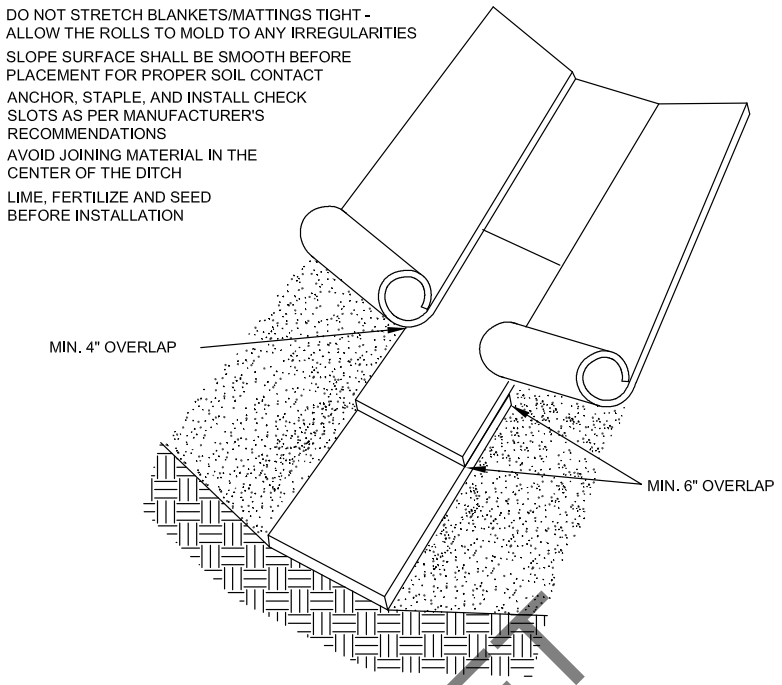

DRAFT

FIGURE C.3.3.B SLOPE INSTALLATION

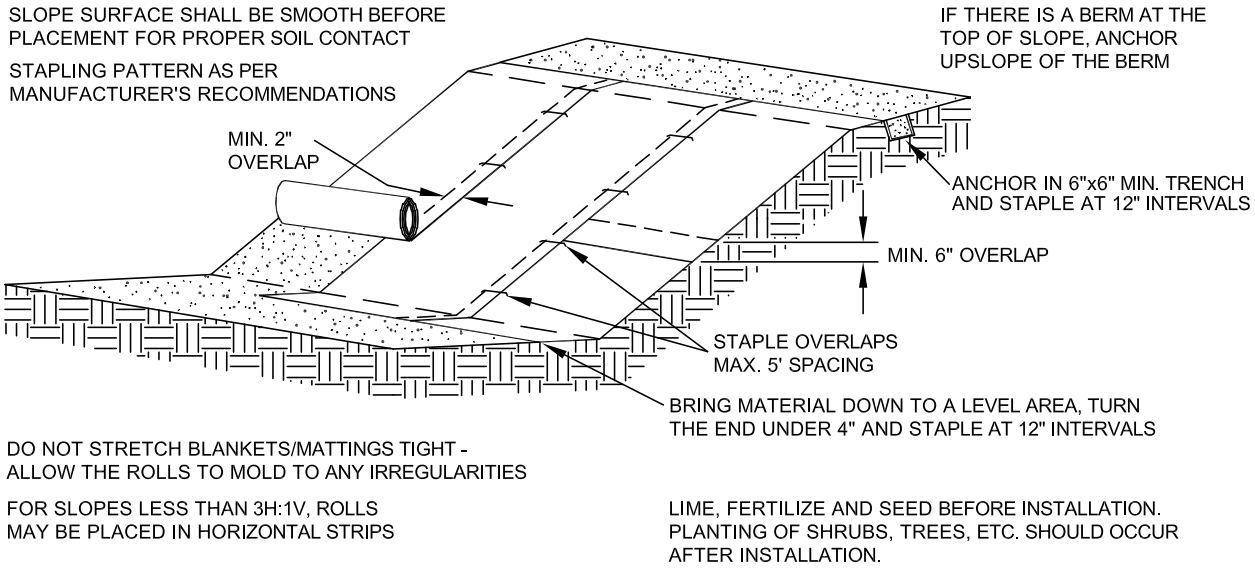

C.3.4 PLASTIC COVERING

Purpose

Plastic covering provides immediate, short-term erosion protection to slopes and disturbed areas.

Conditions of Use

1. Plastic covering may be used on disturbed areas that require cover measures for less than 30 days.
2. Plastic is particularly useful for protecting cut and fill slopes and stockpiles. *Note: The relatively rapid breakdown of most polyethylene sheeting makes it unsuitable for long-term applications.*
3. Clear plastic sheeting may be used over newly-seeded areas to create a greenhouse effect and encourage grass growth. Clear plastic should not be used for this purpose during the summer months because the resulting high temperatures can kill the grass.
4. Due to rapid runoff caused by plastic sheeting, this method shall not be used upslope of areas that might be adversely impacted by concentrated runoff. Such areas include steep and/or unstable slopes.

Note: There have been many problems with plastic, usually attributable to poor installation and maintenance. However, the material itself can cause problems, even when correctly installed and maintained, because it generates high-velocity runoff and breaks down quickly due to ultraviolet radiation. In addition, if the plastic is not completely removed, it can clog drainage system inlets and outlets. It is highly recommended that alternatives to plastic sheeting be used whenever possible and that its use be limited.

Design and Installation Specifications

1. See Figure C.3.4.A for details.
2. Plastic sheeting shall have a minimum thickness of 0.06 millimeters.
3. If erosion at the toe of a slope is likely, a gravel berm, riprap, or other suitable protection shall be installed at the toe of the slope in order to reduce the velocity of runoff.

DRAFT

FIGURE C.3.4.A PLASTIC COVERING

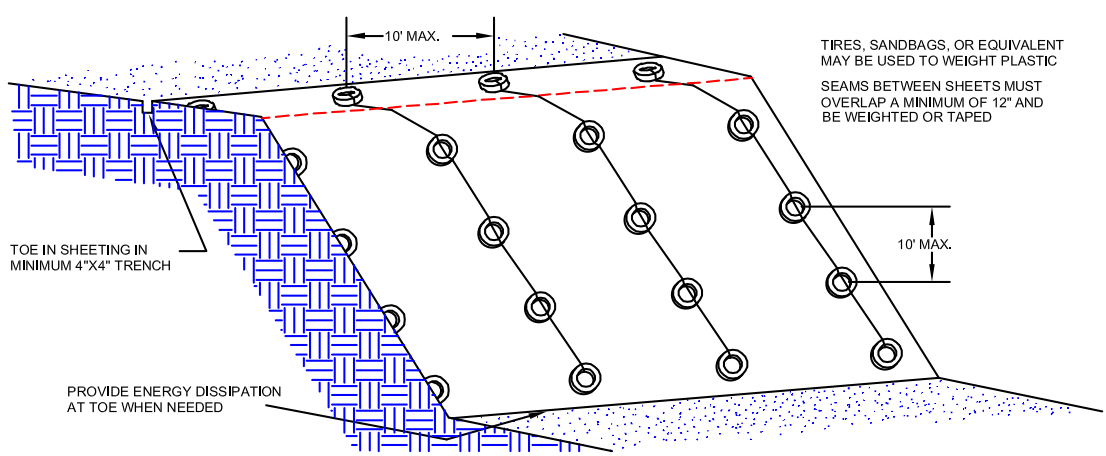

Maintenance Standards for Plastic Covering

1. Torn sheets must be replaced and open seams repaired.
2. If the plastic begins to deteriorate due to ultraviolet radiation, it must be completely removed and replaced.

C.3.5 MARK CLEARING LIMITS/MINIMIZE CLEARING

Purpose

Minimizing clearing is the most effective method of erosion control. Undisturbed vegetation intercepts and slows rainwater. Plant roots hold soil in place, and dead vegetation on the ground acts as a mulch.

Applications

Clearing limits shall be marked and clearing minimized on any ***site*** where significant areas of undisturbed vegetation will be retained.

Design Specifications

1. Minimizing clearing should be incorporated into the ***site*** design. Clearing limits must be marked on the small site ESC plan.
2. On the ground, clearing limits must be clearly marked with brightly colored tape or plastic or metal safety fencing. If tape is used, it should be supported by vegetation or stakes, and should be about 3 to 6 feet high and highly visible. Equipment operators should be informed of areas of vegetation that are to be left undisturbed.
3. The duff layer, native top soil, and natural vegetation shall be retained in an undisturbed state to the maximum extent practicable. If it is not practicable to retain the duff layer in place, it should be stockpiled on-site, covered to prevent erosion, and replaced immediately upon completion of the ground disturbing activities.

DRAFT

Maintenance

Fencing shall be inspected regularly and repaired or replaced as needed.

C.3.6 SILT FENCE

Purpose

Use of a silt fence reduces the transport of coarse sediment from a construction site by providing a temporary physical barrier to sediment and reducing the runoff velocities of overland flow.

Conditions of Use

Silt fence may be used downslope of all disturbed areas. Silt fence is not intended to treat concentrated flows, nor is it intended to treat substantial amounts of overland flow.

Design and Installation Specifications

1. See Figure C.3.6.A and Figure C.3.6.B for details.
2. The geotextile used must meet the standards listed below. A copy of the manufacturer's fabric specifications must be available onsite.

AOS (ASTM D4751)	30-100 sieve size (0.60-0.15 mm) for slit film 50-100 sieve size (0.30-0.15 mm) for other fabrics

Water Permittivity (ASTM D4491)	0.02 sec^{-1} minimum
Grab Tensile Strength (ASTM D4632)	180 lbs. min. for extra strength fabric 100 lbs. min. for standard strength fabric
Grab Tensile Elongation (ASTM D4632)	30% max.
Ultraviolet Resistance (ASTM D4355)	70% min.

3. Standard strength fabric requires wire backing to increase the strength of the fence. Wire backing or closer post spacing may be required for extra strength fabric if field performance warrants a stronger fence.
4. Where the fence is installed, the slope shall be no steeper than 2H:1V.
5. If a typical silt fence (per Figure C.3.6.A) is used, the standard 4 x 4 trench may not be reduced as long as the bottom 8 inches of the silt fence is well buried and secured in a trench that stabilizes the fence and does not allow water to bypass or undermine the silt fence.
6. Silt fences shall be located so as to avoid interfering with the movement of juvenile salmonids attempting to enter off-channel areas or drainages.

Maintenance Standards

1. Any damage shall be repaired immediately.
2. If concentrated flows are evident uphill of the fence, they must be intercepted and conveyed to a sediment trap or pond.
3. It is important to check the uphill side of the fence for signs of the fence clogging and acting as a barrier to flow and then causing channelization of flows parallel to the fence. If this occurs, replace the fence or remove the trapped sediment.
4. Sediment must be removed when the sediment is 6 inches high.
5. If the filter fabric (geotextile) has deteriorated due to ultraviolet breakdown, it shall be replaced.

DRAFT

FIGURE C.3.6.A SILT FENCE

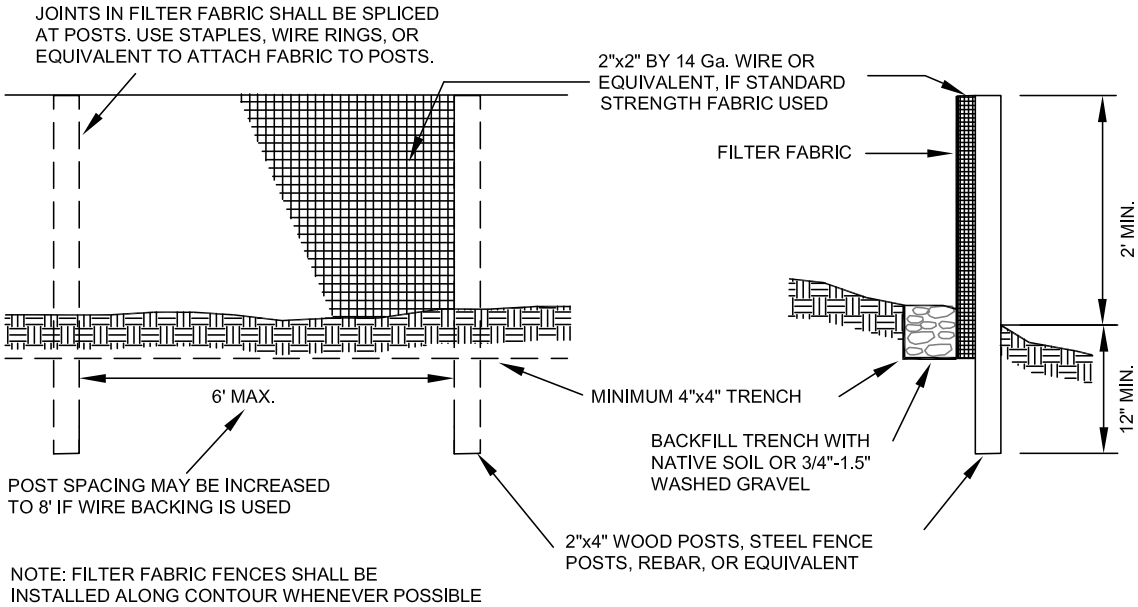

FIGURE C.3.6.B SILT FENCE INSTALLATION AND MAINTENANCE

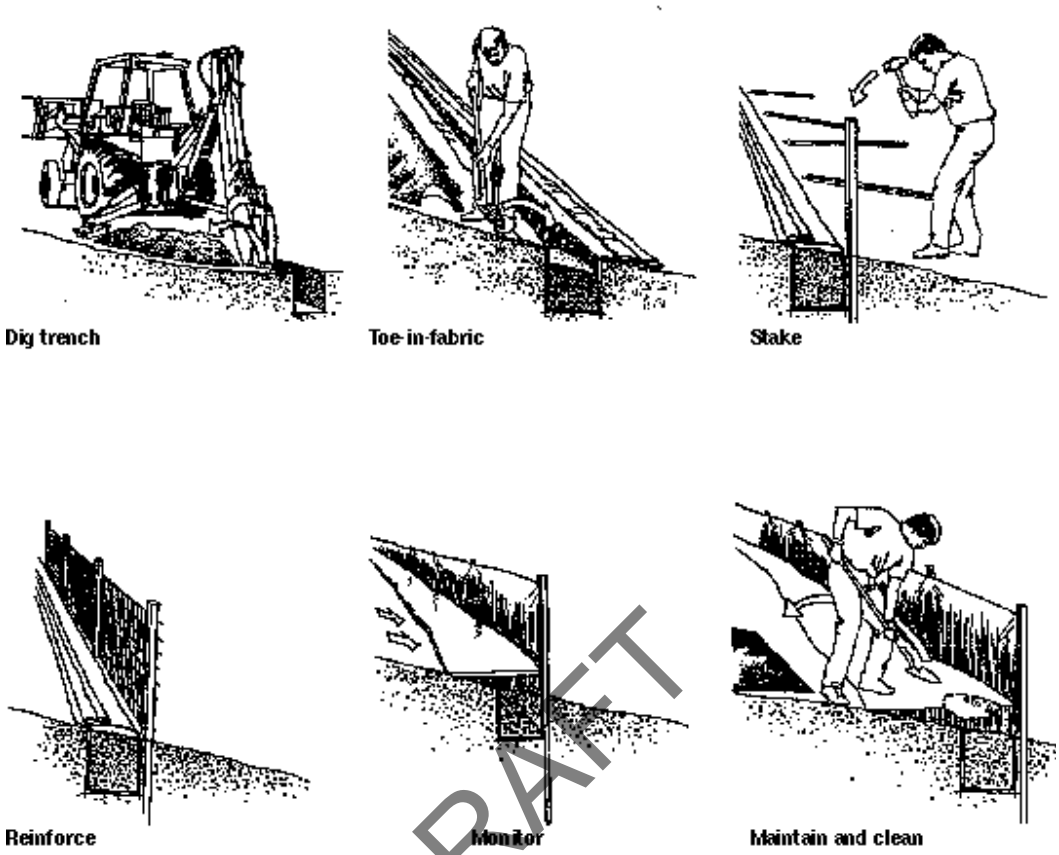

DRAFT

C.3.7 VEGETATED STRIP

Purpose

Vegetated strips reduce the transport of coarse sediment from a construction site by providing a temporary physical barrier to sediment and reducing the runoff velocities of overland flow.

Conditions of Use

Vegetated strips may be used downslope of all disturbed areas. Vegetated strips are not intended to treat concentrated flows, nor are they intended to treat substantial amounts of overland flow.

Design and Installation Specifications

1. The vegetated strip shall consist of a 25-foot minimum width continuous strip of dense vegetation with a permeable topsoil. Grass-covered, landscaped areas are generally not adequate because the volume of sediment overwhelms the grass. Ideally, vegetated strips shall consist of undisturbed native growth with a well-developed soil that allows for infiltration of runoff.
2. The slope within the strip shall not exceed 4H:1V.
3. The uphill boundary of the vegetated strip shall be delineated with clearing limits as specified in Section C.3.5 (p. C-89).

Maintenance Standards

1. Any areas damaged by erosion or construction activity shall be seeded immediately and protected by mulch.
2. If more than 5 feet of the original vegetated strip width has had vegetation removed or is being eroded, sod must be installed.

C.3.8 TRIANGULAR SILT DIKE

Purpose

Triangular silt dikes (TSDs) may be used as check dams, for perimeter protection, for temporary soil stockpile protection, for drop inlet protection, or as a temporary interceptor dike. Silt dikes, if attached to impervious surfaces with tack or other adhesive agent may also be used as temporary wheel wash areas, or concrete washout collection areas.

Conditions of Use

1. May be used for temporary check dams in ditches.
2. May be used on soil or pavement with adhesive or staples.
3. TSDs have been used to build temporary sediment ponds, diversion ditches, concrete washout facilities, curbing, water bars, level spreaders, and berms.

Design and Installation Specifications

1. TSDs must be made of urethane foam sewn into a woven geosynthetic fabric.
2. TSDs are triangular, 10 inches to 14 inches high in the center, with a 20-inch to 28-inch base. A 2-foot apron extends beyond both sides of the triangle along its standard section of 7 feet. A sleeve at one end allows attachment of additional sections as needed
3. Install TSDs with ends curved up to prevent water from flowing around the ends
4. Attach the TSDs and their fabric flaps to the ground with wire staples. Wire staples must be No. 11 gauge wire or stronger and shall be 200 mm to 300 mm in length.
5. When multiple units are installed, the sleeve of fabric at the end of the unit shall overlap the abutting unit and be stapled.
6. TSDs must be located and installed as soon as construction will allow.
7. TSDs must be placed perpendicular to the flow of water.
8. When used as check dams, the leading edge must be secured with rocks, sandbags, or a small key slot and staples.
9. When used in grass-lined ditches and swales, the TSD check dams and accumulated sediment shall be removed when the grass has matured sufficiently to protect the ditch or swale unless the slope of the swale is greater than 4 percent. The area beneath the TSD check dams shall be seeded and mulched immediately after dam removal.

Maintenance Standards

1. Triangular silt dikes shall be monitored for performance and sediment accumulation during and after each runoff producing rainfall event. Sediment shall be removed when it reaches one half the height of the silt dike.
2. Anticipate submergence and deposition above the triangular silt dike and erosion from high flows around the edges of the dike/dam. Immediately repair any damage or any undercutting of the dike/dam.

DRAFT

~~C.3.9.1WINTER STABILIZATION~~

~~Purpose~~

~~In order to minimize sediment-laden runoff, as much of the bare and disturbed portions of the ***project site*** as possible should be covered during any period of precipitation. Once sediment is mobilized, it is much more difficult to effectively control.~~

~~Application~~

~~All ***project sites*** require winter stabilization between October 1 and April 30 (the wet season).~~

~~Design Specifications~~

~~During the above time frame, slopes and stockpiles 3H:1V or steeper and with more than 10 feet of vertical rise shall be covered if they are to remain unworked for more than 12 hours. Other disturbed areas shall be covered or mulched according to Table C.3.1.A (p. C-82) if they are to remain unworked for more than two days. Cover material sufficient to cover all disturbed areas shall be stockpiled on the ***site*** at the beginning of the wet season. Areas that are to be left unworked during the winter shall be seeded prior to September 23.~~

~~Maintenance~~

~~The ***project site*** should be inspected weekly and immediately before, during, and after storms. Cover and other erosion control measures shall be repaired and enhanced as necessary to prevent or minimize sediment runoff and transport.~~

DRAFT

C.3.9 STORM DRAIN INLET PROTECTION

Purpose

Storm drain inlets are protected to prevent coarse sediment from entering storm drainage systems. Temporary devices around storm drains assist in improving the quality of water discharged to inlets or catch basins by ponding sediment-laden water. These devices are effective only for relatively small drainage areas.

Conditions of Use

1. Protection shall be provided for all storm drain inlets downslope and within 500 feet of a disturbed or construction area, unless the runoff that enters the catch basin will be conveyed to a sediment pond or trap.
2. Inlet protection may be used anywhere at the applicant's discretion to protect the drainage system. This will, however, require more maintenance, and it is highly likely that the drainage system will still require some cleaning.
3. The contributing drainage area must not be larger than one acre.

Design and Installation Specifications

1. There are many options **for protecting storm drain inlets**. Two commonly used options are filter fabric protection and catch basin inserts. *Filter fabric protection* (see Figure C.3.9.A~~Figure C.3.9.A~~) is filter fabric (geotextile) placed *over* the grate. This method is generally very ineffective and requires intense maintenance efforts. *Catch basin inserts* (see Figure C.3.9.B~~Figure C.3.9.B~~) are manufactured devices that nest inside a catch basin. This method also requires a high frequency of maintenance to be effective. Both options provide adequate protection, but filter fabric is likely to result in ponding of water above the catch basin, while the insert will not. Thus, filter fabric is only

allowed where ponding will not be a traffic concern and where slope erosion will not result if the curb is overtopped by ponded water.

Trapping sediment in the catch basins is unlikely to improve the water quality of runoff if it is treated in a pond or trap because the coarse particles that are trapped at the catch basin settle out very quickly in the pond or trap. **Catch basin protection normally only improves water quality where there is no treatment facility downstream**. In these circumstances, catch basin protection is an important last line of defense. It is not, however, a substitute for preventing erosion.

The placement of filter fabric *under* grates is generally prohibited and the use of filter fabric over grates is strictly limited and discouraged.

2. It is sometimes possible to construct a small sump around the catch basin before final surfacing of the road. This is allowed because it can be a very effective method of sediment control.

3. Block and gravel filters, gravel and wire mesh filter barriers, and bag barriers filled with various filtering media placed around catch basins can be effective when the drainage area is 1 acre or less and flows do not exceed 0.5 cfs. It is necessary to allow for overtopping to prevent flooding. Many manufacturers have various inlet protection filters that are very effective in keeping sediment-laden water from entering the storm drainage system. The following are examples of a few common methods.

   a) **Block and gravel filters** (Figure C.3.9.C~~Figure C.3.9.C~~) are a barrier formed around an inlet with standard concrete block and gravel, installed as follows:

      - Height is 1 to 2 feet above the inlet.
      - Recess the first row of blocks 2 inches into the ground for stability.
      - Support subsequent rows by placing a 2x4 through the concrete block opening.
      - Do not use mortar.
      - Lay some blocks in the bottom row on their side for dewatering the pooled water.
      - Place cloth or mesh with ½ inch openings over all block openings.
      - Place gravel below the top of blocks on slopes of 2:1 or flatter.
      - An alternate design is a gravel donut.

   b) **Gravel and wire mesh filters** consist of a gravel barrier placed over the top of an inlet. This structure generally does not provide overflow. Install as follows:

      - Cloth or comparable wire mesh with ½ inch openings is placed over inlet.
      - Coarse aggregate covers the cloth or mesh.
      - Height/depth of gravel should be 1 foot or more, 18 inches wider than inlet on all sides.

   c) **Curb inlet protection with a wooden weir** is a barrier formed around an inlet with a wooden frame and gravel, installed as follows:

      - Construct a frame and attach wire mesh (½ inch openings) and filter fabric to the frame.
      - Pile coarse washed aggregate against the wire/fabric.
      - Place weight on frame anchors.

   d) **Curb and gutter sediment barriers** (Figure C.3.9.D~~Figure C.3.9.D~~) consist of sandbags or rock berms (riprap and aggregate) 3 feet high and 3 feet wide in a horseshoe shape, installed as follows:

      - Bags of either burlap or woven geotextile fabric, filled with a variety of media such as gravel, wood chips, compost or sand stacked tightly allows water to pond and allows sediment to separate from runoff.

DRAFT

- Leave a "one bag gap" in the top row of the barrier to provide a spillway for overflow.
- Construct a horseshoe shaped berm, faced with coarse aggregate if using riprap, 3 x 3 and at least 2 feet from the inlet.
- Construct a horseshoe shaped sedimentation trap on the outside of the berm to sediment trap standards for protecting a culvert inlet.

4. **Excavated drop inlet sediment traps** are appropriate where relatively heavy flows are expected and overflow capability is needed. If emergency overflow is provided, additional end-of-pipe treatment may be required. Excavated drop inlets consist of an excavated impoundment area around a storm drain. Sediment settles out of the stormwater prior to enter the drain. Install according to the following specifications:

   a) The impoundment area should have a depth of 1 - 2 feet measured from the crest of the inlet structure.

   b) Side slopes of the excavated area must be no steeper than 2:1.

   c) Minimum volume of the excavated area should be 35 cubic yards.

   d) Install provisions for draining the area to prevent standing water problems.

   e) Keep the area clear of debris.

   f) Weep holes may be drilled into the side of the inlet.

   g) Protect weep holes with wire mesh and washed aggregate.

   h) Weep holes must be sealed when removing and stabilizing excavated area.

   i) A temporary dike may be necessary on the down slope side of the structure to prevent bypass flow.

DRAFT

Maintenance Standards

1. Any accumulated sediment on or around inlet protection shall be removed immediately. Sediment shall not be removed with water, and all sediment must be disposed of as fill on site or hauled off site.
2. Any sediment in the catch basin insert shall be removed when the sediment has filled one-third of the available storage. The filter media for the insert shall be cleaned or replaced at least monthly.
3. Regular maintenance is critical for all forms of catch basin/inlet protection. Unlike many forms of protection that fail gradually, catch basin protection will fail suddenly and completely if not maintained properly.

FIGURE C.3.9.A FILTER FABRIC PROTECTION

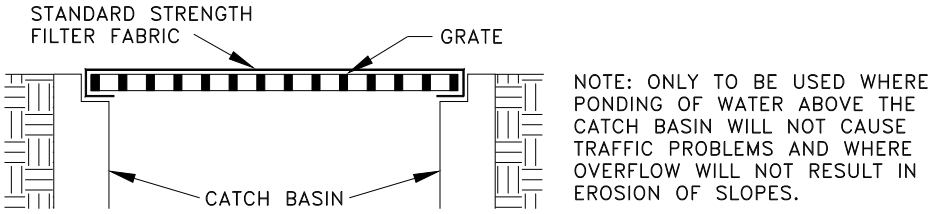

FIGURE C.3.9.B CATCH BASIN INSERT

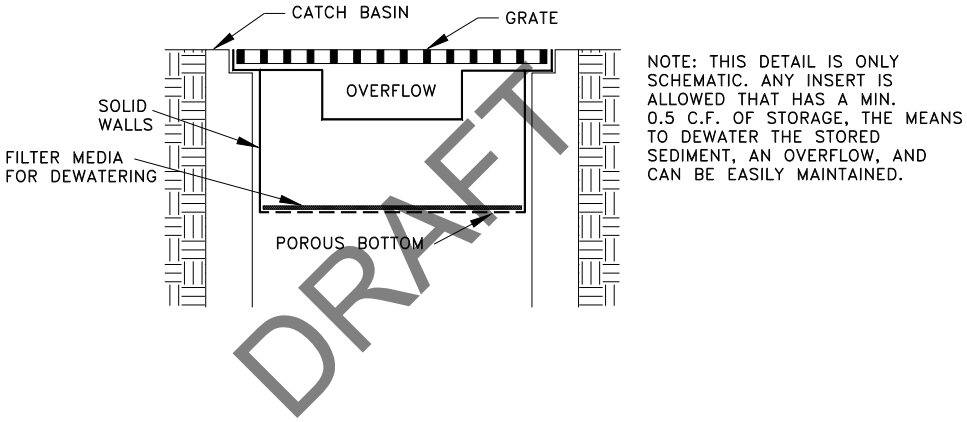

DRAFT

FIGURE C.3.9.C BLOCK AND GRAVEL CURB INLET PROTECTION

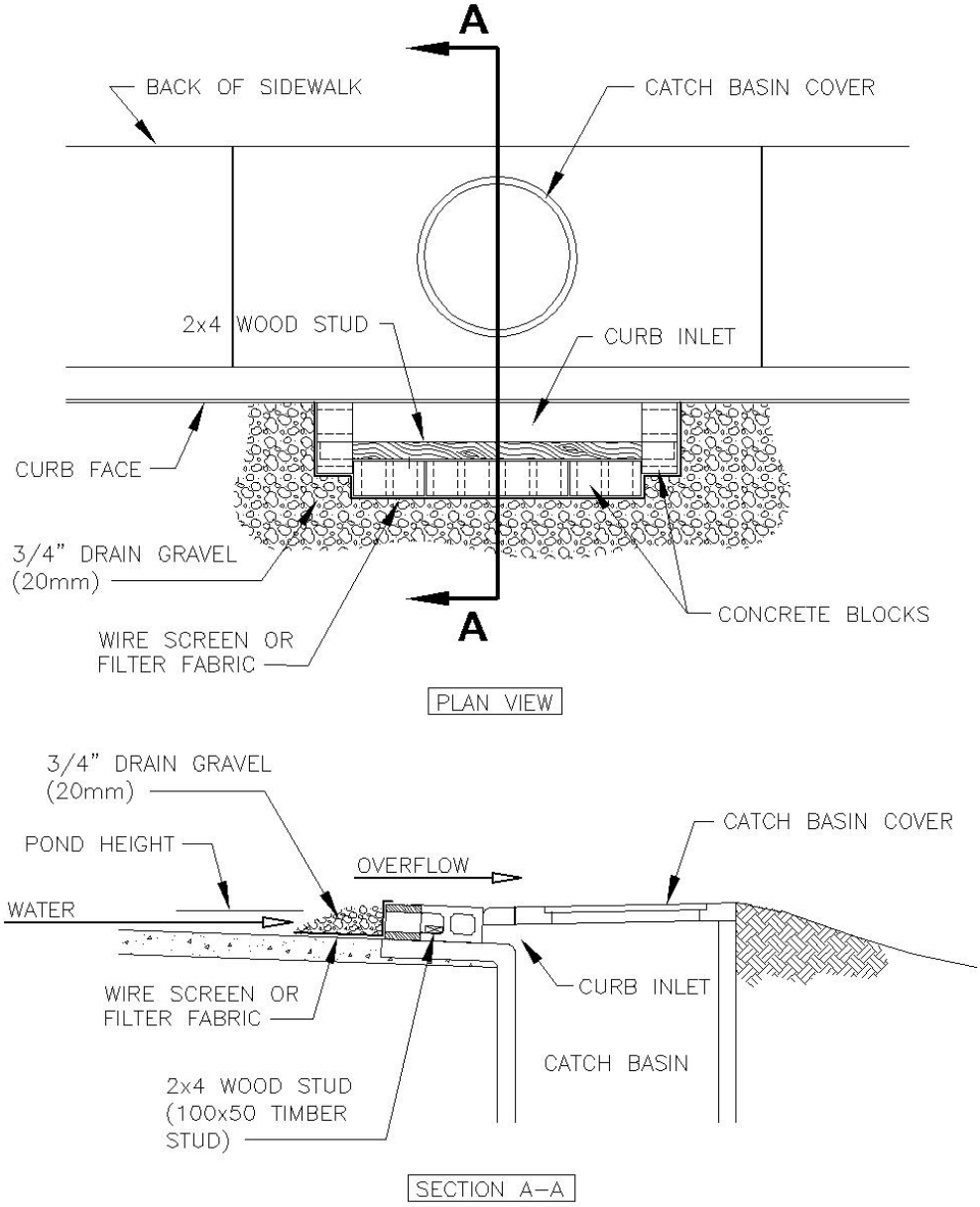

NOTES:

1. USE BLOCK AND GRAVEL TYPE SEDIMENT BARRIER WHEN CURB INLET IS LOCATED IN GENTLY SLOPING SEGMENT, WHERE WATER CAN POND AND ALLOW SEDIMENT TO SEPARATE FROM RUNOFF.
2. BARRIER SHALL ALLOW FOR OVERFLOW FROM SEVERE STORM EVENT.
3. INSPECT BARRIERS AND REMOVE SEDIMENT AFTER EACH STORM EVENT. SEDIMENT AND GRAVEL MUST BE REMOVED FROM THE TRAVELED WAY IMMEDIATELY.

BLOCK AND GRAVEL CURB INLET PROTECTION

FIGURE C.3.9.D CURB AND GUTTER BARRIER PROTECTION

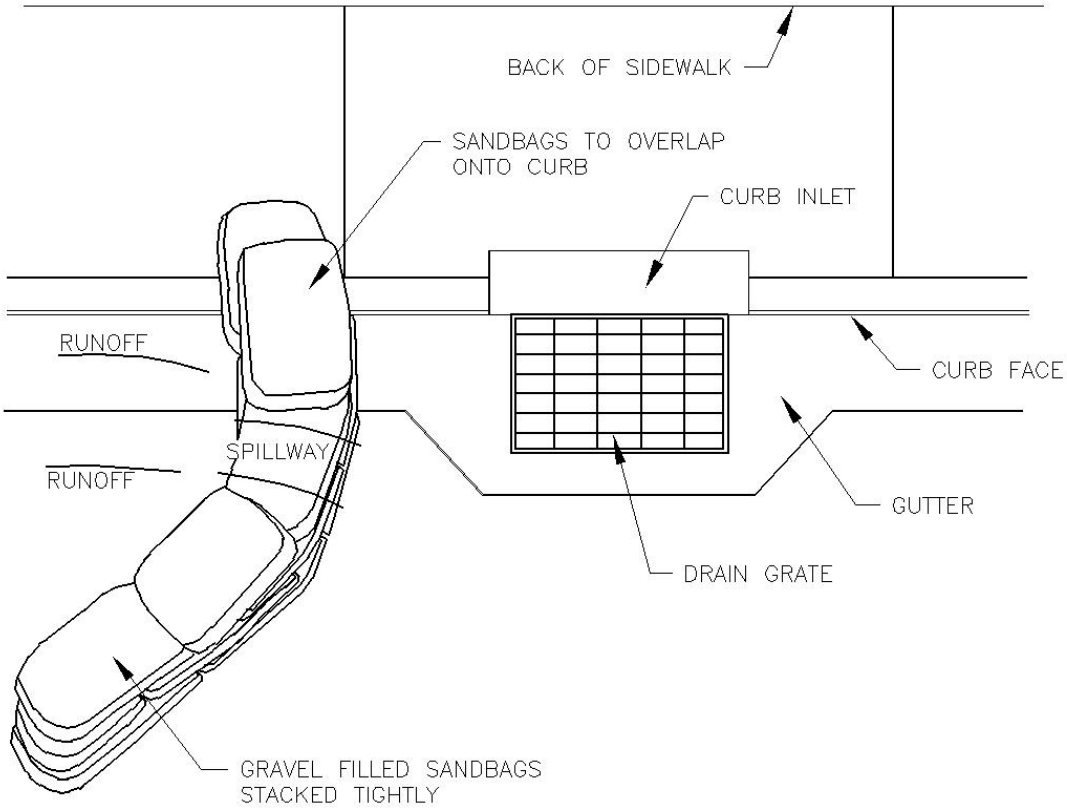

PLAN VIEW

NOTES:

1. PLACE CURB TYPE SEDIMENT BARRIERS ON GENTLY SLOPING STREET SEGMENTS, WHERE WATER CAN POND AND ALLOW SEDIMNENT TO SEPARATE FROM RUNOFF.
2. SANDBAGS OF EITHER BURLAP OR WOVEN GEOTEXTILE FABRIC, ARE FILLED WITH GRAVEL, LAYERED AND PACKED TIGHTLY.
3. LEAVE A ONE SANDBAG GAP IN THE TOP ROW TO PROVIDE A SPILLWAY FOR OVERFLOW.
4. INSPECT BARRIERS AND REMOVE SEDIMENT AFTER EACH STORM EVENT. SEDIMENT AND GRAVEL MUST BE REMOVED FROM THE TRAVELED WAY IMMEDIATELY.

CURB AND GUTTER BARRIER

C.3.10 SEEDING

Purpose

Seeding is intended to reduce erosion by stabilizing exposed soils. A well-established vegetative cover is one of the most effective methods of reducing erosion.

Conditions of Use

1. Seeding shall be used throughout the project on **disturbed areas** that have reached final grade or that will remain unworked for more than 30 days.
2. At the County's discretion, seeding without mulch during the **dry season** is allowed even though it will take more than seven days to develop an effective cover. Mulch is, however, recommended at all times because it protects seeds from heat, moisture loss, and transport due to runoff.
3. At final site stabilization, all disturbed areas not otherwise vegetated or stabilized shall be seeded and mulched.

Design and Installation Specifications

1. The best **time to seed** is April 1 through June 30, and September 1 through October 15. Areas may be seeded between July 1 and August 31, but irrigation may be required in order to grow adequate cover. Areas may also be seeded during the winter months, but it may take several months to develop a dense groundcover due to cold temperatures. The application and maintenance of mulch is critical for winter seeding.
2. To prevent seed from being washed away, confirm that **all required surface water control measures** have been installed.
3. The **seedbed** should be firm but not compacted because soils that are well compacted will not vegetate as quickly or thoroughly.
4. In general, 10-20-20 N-P-K (nitrogen-phosphorus-potassium) **fertilizer** may be used at a rate of 90 pounds per acre. Slow-release fertilizers are preferred because they are more efficient and have fewer environmental impacts. It is recommended that areas being seeded for final landscaping conduct soil tests to determine the exact type and quantity of fertilizer needed. This will prevent the over-application of fertilizer. Disturbed areas within 200 feet of water bodies and wetlands must use slow-release low-phosphorus fertilizer (typical proportions 3-1-2 N-P-K).
5. The following requirements apply to **mulching**:
   a) Mulch is always required for seeding slopes greater than 3H:1V (see Section D.4.2.1).
   b) If seeding during the wet season, mulch is required.
   c) The use of mulch may be required during the dry season at the County's discretion if grass growth is expected to be slow, the soils are highly erodible due to soil type or gradient, there is a water body close to the disturbed area, or significant precipitation is anticipated before the grass will provide effective cover.
   d) Mulch may be applied on top of the seed or simultaneously by hydroseeding.
6. **Hydroseeding** is allowed as long as tackifier is included. Hydroseeding with wood fiber mulch is adequate during the dry season. During the wet season, the application rate shall be doubled because the mulch and tackifier used in hydroseeding break down fairly rapidly. It may be necessary in some applications to include straw with the wood fiber, but this can be detrimental to germination.
7. Areas to be permanently landscaped shall use **soil amendments**. Good quality topsoil shall be tilled into the top six inches to reduce the need for fertilizer and improve the overall soil quality. Most native soils will require the addition of four inches of well-rotted compost to be tilled into the soil to

DRAFT

provide a good quality topsoil. Compost used should meet Ecology publication 98-38 specifications for Grade A quality compost.

8. The **seed mixes** listed below include recommended mixes for both temporary and permanent seeding. These mixes, with the exception of the wetland mix, shall be applied at a rate of 120 pounds per acre. This rate may be reduced if soil amendments or slow-release fertilizers are used. Local suppliers should be consulted for their recommendations because the appropriate mix depends on a variety of factors, including exposure, soil type, slope, and expected foot traffic. Alternative seed mixes approved by the County may be used.

TABLE C.3.10.A TEMPORARY EROSION CONTROL SEED MIX			
	% Weight	% Purity	% Germination
Chewings or red fescue (*Festuca rubra var. commutata* or *Festuca rubra*)	40	98	90
Annual or perennial rye (*Lolium multiflorum* or *Lolium perenne*)	40	98	90
Redtop or colonial bentgrass (*Agrostis alba* or *Agrostis tenuis)*	10	92	85
White dutch clover (*Trifolium repens*}	10	98	90

TABLE C.3.10.B LANDSCAPING SEED MIX			
	% Weight	% Purity	% Germination
Perennial rye blend (*Lolium perenne*)	70	98	90
Chewings and red fescue blend (*Festuca rubra var. commutata* or *Festuca rubra)*	30	98	90

DRAFT

Maintenance Standards for Seeding

1. Any seeded areas that fail to establish at least 80 percent cover within one month shall be reseeded. If reseeding is ineffective, an alternate method, such as sodding or nets/blankets, shall be used. If winter weather prevents adequate grass growth, this time limit may be relaxed at the discretion of the County when critical areas would otherwise be protected.
2. After adequate cover is achieved, any areas that experience erosion shall be re-seeded and protected by mulch. If the erosion problem is drainage related, the problem shall be fixed and the eroded area re-seeded and protected by mulch.
3. Seeded areas shall be supplied with adequate moisture, but not watered to the extent that it causes runoff.

C.3.11 SODDING

Purpose

The purpose of sodding is to establish permanent turf for immediate erosion protection and to stabilize drainage ways where concentrated overland flow will occur.

Conditions of Use

Sodding may be used in the following areas:

1. Disturbed areas that require short-term or long-term cover

2. Disturbed areas that require immediate vegetative cover

Design and Installation Specifications

Sod shall be free of weeds, of uniform thickness (approximately 1-inch thick), and shall have a dense root mat for mechanical strength.

The following steps are recommended for sod installation:

1. Shape and smooth the surface to final grade in accordance with the approved grading plan.
2. Amend two inches (minimum) of well-rotted compost into the top six inches of the soil if the organic content of the soil is less than ten percent. Compost used should meet Ecology publication 98-38 specifications for Grade A quality compost.
3. Fertilize according to the supplier's recommendations. Disturbed areas within 200 feet of water bodies and wetlands must use non-phosphorus fertilizer.
4. Work lime and fertilizer 1 to 2 inches into the soil, and smooth the surface.
5. Lay strips of sod beginning at the lowest area to be sodded and perpendicular to the direction of water flow. Wedge strips securely into place. Square the ends of each strip to provide for a close, tight fit. Stagger joints at least 12 inches. Staple on slopes steeper than 3H:1V.
6. Roll the sodded area and irrigate.
7. When sodding is carried out in alternating strips or other patterns, seed the areas between the sod immediately after sodding.

Maintenance Standards

If the grass is unhealthy, the cause shall be determined and appropriate action taken to reestablish a healthy groundcover. If it is impossible to establish a healthy groundcover due to frequent saturation, instability, or some other cause, the sod shall be removed, the area seeded with an appropriate mix, and protected with a net or blanket.

DRAFT

C.3.12 INTERCEPTOR DIKES AND SWALES

Purpose

Interceptor dikes and swales intercept storm runoff from drainage areas on or above disturbed slopes and convey it to a sediment pond or trap. They may also be used to intercept runoff from undisturbed areas and convey the runoff to a point below any exposed soils. Interception of surface water reduces the possibility of slope erosion.

Conditions of Use

Interceptor dikes and swales are required in the following situations:

1. At the top of all slopes in excess of 3H:1V and with more than 20 feet of vertical relief.
2. At intervals on any slope that exceeds the dimensions specified in this section for the horizontal spacing of dikes and swales.

Design and Installation Specifications

1. See Figure C.3.12.A~~Figure C.3.12.A~~ for details of an interceptor dike and Figure C.3.12.B~~Figure C.3.12.B~~ for an interceptor swale.

2. Interceptor dikes and swales shall be **spaced horizontally** as follows:

Average Slope	Slope Percent	Flowpath Length
20H:1V or less	3-5%	300 feet
(10 to 20)H:1V	5-10%	200 feet
(4 to 10)H:1V	10-25%	100 feet
(2 to 4)H:1V	25-50%	50 feet

3. For slopes steeper than 2H:1V with more than 10 feet of vertical relief, **benches** may be constructed or closer spaced interceptor dikes or swales may be used. Whichever measure is chosen, the spacing and capacity of the measures must be designed by the engineer and the design must include provisions for effectively intercepting the high velocity runoff associated with steep slopes.

4. If the dike or swale intercepts runoff from **disturbed areas**, it shall discharge to a stable conveyance system that routes the runoff to a sediment pond or trap. If the dike or swale intercepts runoff that originates from **undisturbed areas**, it shall discharge to a stable conveyance system that routes the runoff downslope of any disturbed areas and releases the water at a stabilized outlet.

Maintenance Standards

1. Damage resulting from runoff or construction activity shall be repaired immediately.

2. If the facilities do not regularly retain storm runoff, the capacity and/or frequency of the dikes/swales shall be increased.

FIGURE C.3.12.A INTERCEPTOR DIKE

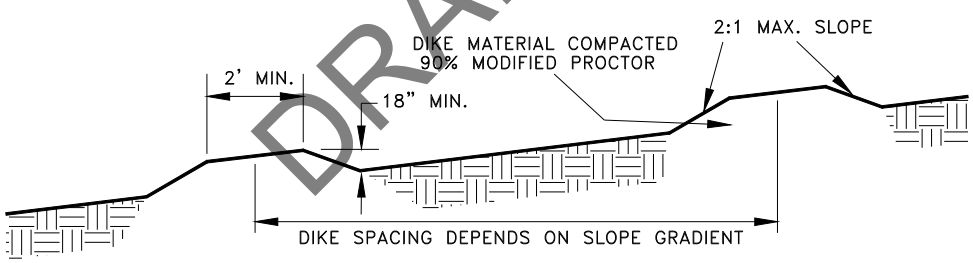

DRAFT

FIGURE C.3.12.B INTERCEPTOR SWALE

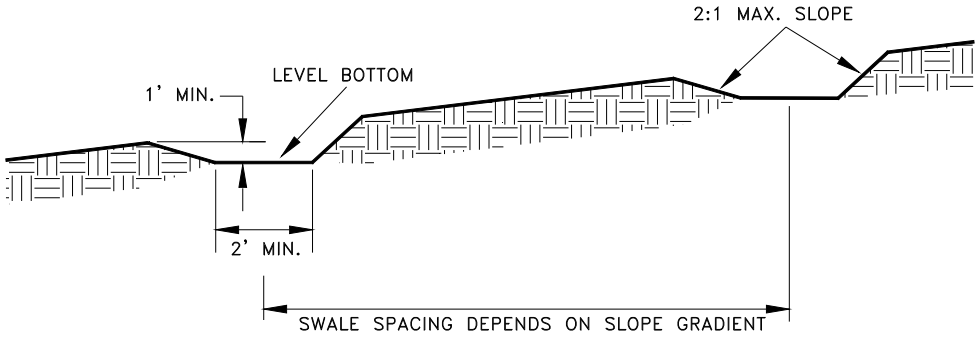

C.3.13 DITCHES

Purpose

Ditches intercept and convey runoff from disturbed areas to sediment control locations. They also convey runoff intercepted from undisturbed areas around the construction site to a non-erosive discharge point.

Conditions of Use

Ditches may be used anywhere that concentrated runoff is to be conveyed on or around the construction site. Temporary pipe systems may also be used to convey runoff.

Design and Installation Specifications

1. Up to 30,000 square feet may be drained by a 12-inch deep trapezoidal ditch with a 1-foot bottom width. Up to 2 acres may be drained by an 18-inch deep trapezoidal ditch with a 1-foot bottom width. Ditches draining larger areas will need to be sized by a ***civil engineer***.
2. Ditch side slopes shall be no steeper than 2H:1V.
3. Ditches on 5% or steeper grades shall be armored with rip rap or contain crushed rock check dams spaced such that the crest of each dam is even with the toe of the next upstream dam. See Figure C.3.13.A~~Figure C.3.13.A~~ for details on check dam installation.

Maintenance Standards

1. Any sediment deposition of more than 0.5 feet shall be removed so that the channel is restored to its design capacity.
2. If the channel capacity is insufficient for the design flow, it must be determined whether the problem is local (e.g., a constriction or bend) or the channel is under-designed. If the problem is local, the channel capacity must be increased through construction of a berm(s) or by excavation. If the problem is under-design, the design engineer shall be notified and the channel redesigned to a more conservative standard to be approved by King County.
3. The channel shall be examined for signs of scouring and erosion of the bed and banks. If scouring or erosion has occurred, affected areas shall be protected by riprap or an erosion control blanket or net.

DRAFT

FIGURE C.3.13.A CHECK DAMS

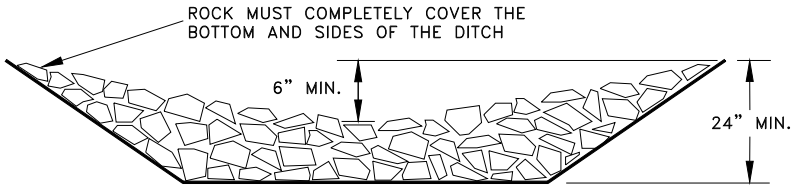

CROSS SECTION

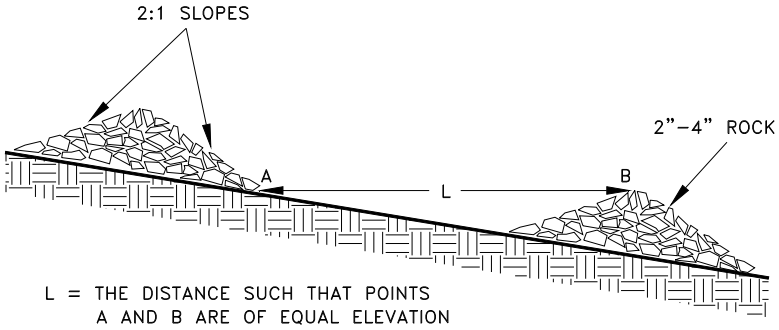

CHECK DAM SPACING

C.3.14 PIPE SLOPE DRAIN

Purpose

Pipe slope drains are designed to carry concentrated runoff down steep slopes without causing erosion, or saturation of slide-prone soils. Pipe slope drains may be used to divert water away from or over bare soil to prevent gullies, channel erosion, and saturation of slide prone soils

Conditions of Use

Pipe slope drains should be used when a temporary or permanent stormwater conveyance is needed to move water down a steep slope to avoid erosion. Pipe slope drains may be:

1. Used on any slope with a gradient of 2H:1V or greater and with at least 10 feet of vertical relief.
2. Used to drain water collected from aquifers exposed on cut slopes and convey it to the base of the slope.
3. Used to collect clean runoff from plastic sheet cover and direct away from any exposed soils.
4. Installed in conjunction with silt fence to drain collected water to a controlled area.

DRAFT

Design and Installation Specifications

1. See Figure C.3.14.A~~Figure C.3.14.A~~ for details.
2. Up to 30,000 square feet may be drained by each 6-inch minimum diameter pipe. Up to 2 acres may be drained by each 12-inch minimum diameter pipe.
3. The **maximum drainage area** allowed for any 12-inch pipe is 2 acres. For larger areas, more than one pipe shall be used.
4. The **soil** around and under the pipe and entrance section shall be thoroughly compacted.
5. The **flared inlet section** shall be securely connected to the slope drain and be fused or welded, or have flange-bolted mechanical joints to ensure a watertight seal. Ensure that the entrance area is stable and large enough to direct flow into the pipe.
6. Slope drains shall be continuously fused, welded, or flange-bolted mechanical joint pipe systems with proper anchoring to the soil.
7. Re-establish cover immediately on areas disturbed by the installation.

Maintenance Standards

1. The inlet shall not be undercut or bypassed by water. If there are problems, the head wall shall be appropriately reinforced.
2. No erosion shall occur at the outlet point. If erosion occurs, additional protection shall be added.

FIGURE C.3.14.A PIPE SLOPE DRAIN

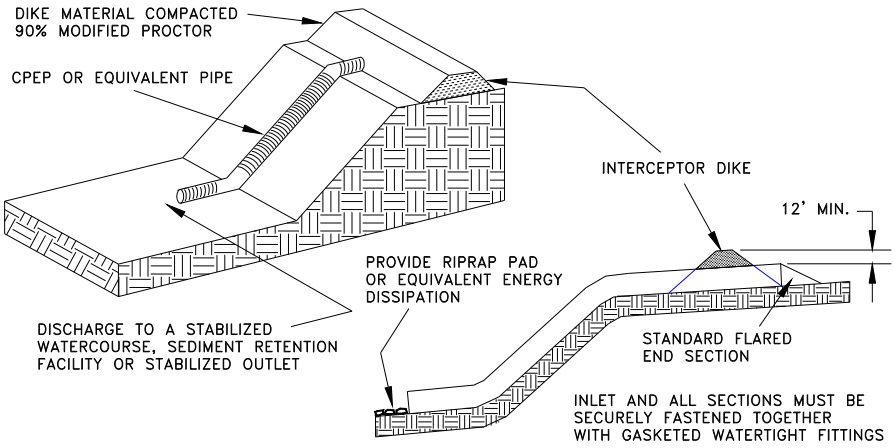

C.3.15 DEWATERING CONTROL

DRAFT

Purpose

To prevent the untreated discharge of sediment-laden water from dewatering of utility trenches, excavated areas, foundations, etc.

Conditions of Use

Dewatering control measures shall be used whenever there is a potential for runoff from dewatering of utility trenches, excavations, foundations, etc.

Design Specifications

1. Foundation, vault, excavation, and trench dewatering water that has similar characteristics to stormwater runoff at the site shall be discharged into a controlled conveyance system prior to discharge to a sediment trap or sediment pond. Foundation and trench dewatering water, which has similar characteristics to stormwater runoff at the site, must be disposed of through one of the following options depending on site constraints:
   a) Infiltration,
   b) Transport offsite in a vehicle, such as a vacuum flush truck, for legal disposal in a manner that does not pollute surface waters,
   c) Discharge to the sanitary sewer discharge with local sewer district approval if there is no other option, or
   d) Use of a sedimentation bag with outfall to a ditch or swale for small volumes of localized dewatering.

2. Clean, non-turbid dewatering water, such as well-point ground water, may be discharged via stable conveyance to systems tributary to surface waters, provided the dewatering flow does not cause erosion or flooding of receiving waters.

3. Highly turbid or contaminated dewatering water shall be handled separately from stormwater.

C.3.16 CONTROL OF OTHER POLLUTANTS

Purpose

To prevent the discharge of pollutants resulting from construction activities.

Application

Pollution control measures shall be used whenever there is a potential for the discharge to ground or surface water of any pollutants used on the site.

Pollution Control Measures

The following pollution control measures shall be implemented as applicable using activity-specific BMPs detailed in the King County *Stormwater Pollution Prevention Manual (SPPM)*:

1. All pollutants, including waste materials, that occur onsite shall be handled and disposed of in a manner that does not cause contamination of stormwater. See *SPPM* Activity Sheets A-8, A-11, A-12, A-16, A-17, A-22, A-29, A-38, and A-41.

2. Cover, containment, and protection from vandalism shall be provided for all chemicals, liquid products, petroleum products, and non-inert wastes present on the site (see Chapter 173-304 WAC for the definition of inert waste). Onsite fueling tanks shall include secondary containment. See *SPPM* Activity Sheets A-2, A-3, A-4, A-6, A-8, and A-9.

3. Maintenance and repair of heavy equipment and vehicles involving oil changes, hydraulic system drain down, solvent and de-greasing cleaning operations, fuel tank drain down and removal, and other activities which may result in discharge or spillage of pollutants to the ground or into stormwater runoff must be conducted using spill prevention measures, such as drip pans. Contaminated surfaces shall be cleaned immediately following any discharge or spill incident. Emergency repairs may be performed onsite using temporary plastic placed beneath and, if raining, over the vehicle. See *SPPM* Activity Sheets A-13, A-17, and A-18.

4. Application of agricultural chemicals, including fertilizers and pesticides, shall be conducted in a manner and at application rates that will not result in loss of chemical to stormwater runoff. Manufacturers' recommendations for application rates and procedures shall be followed. See *SPPM* Activity Sheets A-5, A-25, and A-26.

5. Measures shall be used to prevent or treat contamination of stormwater runoff by pH modifying sources. These sources include, but are not limited to, bulk cement, cement kiln dust, fly ash, new concrete washing and curing waters, waste streams generated from concrete grinding and sawing, exposed aggregate processes, and concrete pumping and mixer washout waters. Stormwater discharges shall not cause or contribute to a violation of the water quality standard for pH in the receiving water. See *SPPM* Activity Sheets A-19, A-20, A-29, A-43, and A-44.

DRAFT

~~C.3.10 FINAL STABILIZATION~~

~~Purpose~~

~~Final stabilization minimizes sediment-laden runoff from the ***project site*** after construction has been completed.~~

~~Application~~

~~All ***sites*** require final stabilization prior to final construction approval.~~

~~Design Specifications~~

~~Prior to final construction approval, the ***project site*** shall be stabilized to prevent sediment-laden water from leaving the ***project site*** after project completion. All disturbed areas of the ***project site*** shall be vegetated or otherwise permanently stabilized. At a minimum, disturbed areas must be seeded and mulched to ensure that sufficient cover will develop shortly after final approval. Mulch without seeding is adequate for small areas to be landscaped before October 1.~~

~~All permanent surface water facilities (including catch basins, manholes, pipes, ditches, channels, flow control facilities, and water quality facilities) impacted by sedimentation during construction must be cleaned.~~

~~Maintenance~~

~~Permanent erosion control is the responsibility of the owner. The ***project site*** must be kept stabilized using landscaping, mulch, or other measures to prevent sediment-laden water from leaving the ***project site*** and to prevent sediment from being transported onto adjacent properties and roads.~~

DRAFT

DRAFT

C.4 SMALL PROJECT DRAINAGE PLAN SPECIFICATIONS

This section presents the specifications of drainage plans and supporting documentation that must be submitted for projects in Small Project Drainage Review. See Section C.1.5 (p. C-24) for a complete list of items that must be submitted. See Reference Section C.5.1 (p. C-119) for a description of the Small Project Drainage Review Process.

Organization of Section C.4

This section is organized as follows:

- Section C.4.1, "Components of Small Project Drainage Plans" (p. C-109)
- Section C.4.2, "Specifications for Site Plans" (p. C-111)
- Section C.4.3, "BMP Design and Maintenance Details" (p. C-115)
- Section C.4.4, "Written Drainage Assessment" (p. C-116)

C.4.1 COMPONENTS OF SMALL PROJECT DRAINAGE PLANS

Unless otherwise directed by DDES, small project drainage plans **for projects on individual *sites*/lots** typically include a flow control BMP site plan, flow control BMP design and maintenance details, a small site ESC plan, and a written drainage assessment as described and illustrated in this section. If the project is a **subdivision**, a site improvement plan is typically required, but if flow control BMPs are proposed to be installed by the subdivision project on the individual lots, a flow control BMP site plan may substitute for the site improvement plan as allowed by DDES. This should be determined in a preapplication meeting with DDES.

*Note, if there are any **site** conditions or drainage issues that must be addressed by a **civil engineer** as determined by DDES, an engineering plan as described in Chapter 2 of the SWDM will be required in addition to the Small Project Drainage Plan.*

DRAFT

C.4.1.1 COMPONENTS REQUIRED FOR INDIVIDUAL LOT PROJECTS

Most of the information required for the small project drainage plan is also required for a residential site plan, which must be submitted with the permit application (see DDES Bulletin No. 9, "Obtaining a Residential Building Permit"). In fact, the residential site plan may be used as a base map for the flow control BMP site plan and small site ESC plan components of the small project drainage plan.

Required components for all individual lot projects are as follows:

1. **Flow Control BMP Site Plan**. This is a scale drawing of the individual ***site*/lot** used to show how required flow control BMPs will be applied to the ***target impervious surface*** and ***new pervious surface*** proposed on the ***site*/lot**. The flow control BMP (FCBMP) site plan is intended to be a recordable document (or reducible to a recordable document) that can be attached to the declaration of covenant and grant of easement required for implementation of flow control BMPs on individual ***sites*/lots**. DDES may allow a written version of this plan if they determine there is no need to illustrate the size and location of proposed flow control BMPs.
2. **Flow Control BMP Design and Maintenance Details** (required whenever flow control BMPs are proposed by a project). These are diagrams/figures, design specifications, and maintenance instructions for each flow control BMP proposed. FCBMP design and maintenance details are intended to be recordable to facilitate attachment to the declaration of covenant and grant of easement required for implementation of flow control BMPs on individual ***sites*/lots**. DDES may waive all or a

portion of this component if they determine there is no need to specify design details or maintenance instructions for certain proposed BMPs (e.g., the reduced footprint BMP).

3. **Small Site ESC Plan**. This is a scale drawing of the ***site*** or ***project site*** used to show the limits of disturbance by the project and how required ESC measures will be applied to prevent sediment from leaving the ***project site***. The plan must include or be accompanied by any necessary standard details for installation of proposed ESC measures. The figures in Section C.3 may be used as details. DDES may allow a written version of this plan if they determine there is no need to illustrate the extent and location of proposed ESC measures. *Note: if the project proposes to disturb ~~3~~ 1 or more acre~~s~~, an ESC plan prepared by a* ***civil engineer*** *will be required in accordance with the County's ESC Standards (Appendix D of the SWDM).*

4. **Written Drainage Assessment**.[18] This is an overview of the proposed project and its compliance with the drainage requirements of this appendix. It includes a description of proposed ***site*** improvements, existing ***site*** conditions, critical areas, existing drainage features, and proposed flow control BMPs and ESC measures, including how they were selected and sized. The drainage assessment should also discuss the results and implications of any soils reports or special studies completed for the ***site***.

C.4.1.2 COMPONENTS REQUIRED FOR SUBDIVISION PROJECTS

The components required for a subdivision project depend on whether flow control BMPs are proposed to be installed as part of the project as described below.

A. NO FLOW CONTROL BMPS PROPOSED

1. **Site Improvement Plan**. This is a scale drawing of the ***site*** used to show the proposed lot layout, building restrictions, road and drainage improvements, and any measures necessary to mitigate the stormwater impacts of road improvements.

2. **Small Site ESC Plan**. Same as for individual lot projects in Section C.4.1.1.

3. **Written Drainage Assessment**. Same as for individual lot projects in Section C.4.1.1.

DRAFT

B. FLOW CONTROL BMPS PROPOSED

1. **Flow Control BMP Site Plan** (required for each lot). This is a scale drawing of each lot used to show how required flow control BMPs will be applied to the **future anticipated** ***target impervious surface*** and ***new pervious surface*** on the ***site*/lot**. All other aspects of this plan are the same as for individual lot projects in Section C.4.1.1.

2. **Flow Control BMP Design and Maintenance Details** (required for each lot). Same as for individual lot projects in Section C.4.1.1.

3. **Site Improvement Plan**. May be waived by DDES if they determine the FCBMP site plan and design details are an adequate substitute or if no road or drainage improvements are proposed.

4. **Small Site ESC Plan**. Same as for individual lot projects in Section C.4.1.1.

5. **Written Drainage Assessment**. Same as for individual lot projects in Section C.4.1.1.

[18] If engineering plans are required, the information requested in the written drainage assessment should be incorporated in the technical information report.

C.4.2 SPECIFICATIONS FOR SITE PLANS

FCBMP site plans, subdivision site improvement plans, and small site ESC plans are drawings of the entire ***site*** that contains the project. They should be drawn on 8½" x 11", 8½" x 14", or 11" x 17" paper, although the applicant is advised to draw **FCBMP site plans** on 8½" x 11"or 8½" x 14" paper with 1-inch margins so they can be directly recorded as attachments to the required **declaration of covenant and grant of easement** per Requirement 3 of Section C.1.3.3 (p. C-19).

Site plans for projects in Small Project Drainage Review must include the information specified in the following subsections.

C.4.2.1 GENERAL INFORMATION

The following information must be included on **all** FCBMP site plans, subdivision site improvement plans, and small site ESC plans, unless otherwise directed by DDES:

Identification

- Name, address, and phone number of applicant
- Parcel number
- Dimension of all property lines, easements, and building setback lines
- Street names and existing or proposed property address
- Section, township, and range of proposal.
- North arrow
- Legend if needed
- **Scale**—use a scale that clearly illustrates drainage features and BMPs/measures (1"=20' is standard scale; minimum acceptable scale is 1"=50'). If necessary, split the ***site*** plan into two or more plan sheets and indicate a "match line" on each sheet to show how the sheets splice together. A variation of this approach is to use separate scales for the ***project site*** versus the entire ***site*** and draw them on separate plan sheets.

DRAFT

Building and Site Development Features

- Footprint of all structures (existing and proposed)
- Parking, roads, and driveways (existing and proposed)
- Sport courts and any other paved or impervious surfaces (existing and proposed)
- Pervious surface land cover (existing and proposed)
- Location of any retaining walls and rockeries (existing and proposed)
- Existing or proposed septic system, including all system components and both primary and reserve drainfields
- Utility structures (poles, fire hydrants, etc.)
- Existing wells or wells to be abandoned.

Topography

- Corner elevations of the ***site*/lot**
- Benchmark (a permanent mark indicating elevation and serving as a reference in the topographic survey)

- Datum [assumed datum is acceptable in many cases (i.e., fire hydrant base = 100'); datum for projects in or near FEMA floodplain should be NGVD 1929]
- Show 5-foot contours for all slopes steeper than 15% and delineate the top and bottom of these slopes
- For ***sites*/lots** that are 22,000 square feet and larger, show 2-foot or 5-foot contours as needed to design and demonstrate compliance with the minimum requirements and specifications for proposed flow control BMPs and ESC measures.

Drainage Features and Critical Areas

- Location of all existing and proposed ditches, swales, pipes, etc.
- Delineation of all streams, wetlands, lakes, closed depressions, or other water features (including any required buffer widths)
- Delineation of all ***flood hazard areas***, ***erosion hazard areas***, ***steep slope hazard areas***, ***landslide hazard areas***, and their buffers and building setback lines
- Delineation of all drainage easements, tracts, and right-of-way
- Delineation of all critical areas as shown on any recorded critical areas notice on title.

C.4.2.2 INFORMATION SPECIFIC TO FLOW CONTROL BMPS

In addition to the general information required in Section C.4.2.1, the following additional information is required on FCBMP site plans and on subdivision site improvement plans that include installation of flow control BMPs within a dedicated tract or road right-of-way:

- Location and dimensions of flow control BMP **devices** such as dispersion trenches, infiltration trenches, drywells, ground surface depressions, rain gardens, permeable pavements, rain water storage tanks, and perforated pipe connections
- Delineation and dimensions of ***target impervious surface*** and ***new pervious surface***
- Delineation and dimensions of **vegetated flowpath segments** if applicable
- Delineation of ***native vegetated surface*** to be created and preserved
- **Setback lengths** between flow control BMPs and any property line, structure, steep slope, stream, wetland, or septic system.

DRAFT

C.4.2.3 INFORMATION SPECIFIC TO SMALL SITE ESC PLANS

In addition to the general information required in Section C.4.2.1, the following additional information is required on small site ESC plans, unless otherwise directed by DDES:

- Delineation of proposed **clearing limits** (i.e., area to be disturbed)
- Type and location of **ESC measures**
- Notes indicating the location of any **significant offsite drainage features** within 200 feet of the discharge point(s) for the ***site*/lot**, including streams, lakes, roadside ditches.

C.4.2.4 EXAMPLE SITE PLANS

Presented in this section is an example of a **flow control BMP site plan** (Figure C.4.2.A) and **a small site ESC plan** (Figure C.4.2.B) for construction of a single family residence.

FIGURE C.4.2.A SINGLE FAMILY RESIDENCE – FLOW CONTROL BMP SITE PLAN

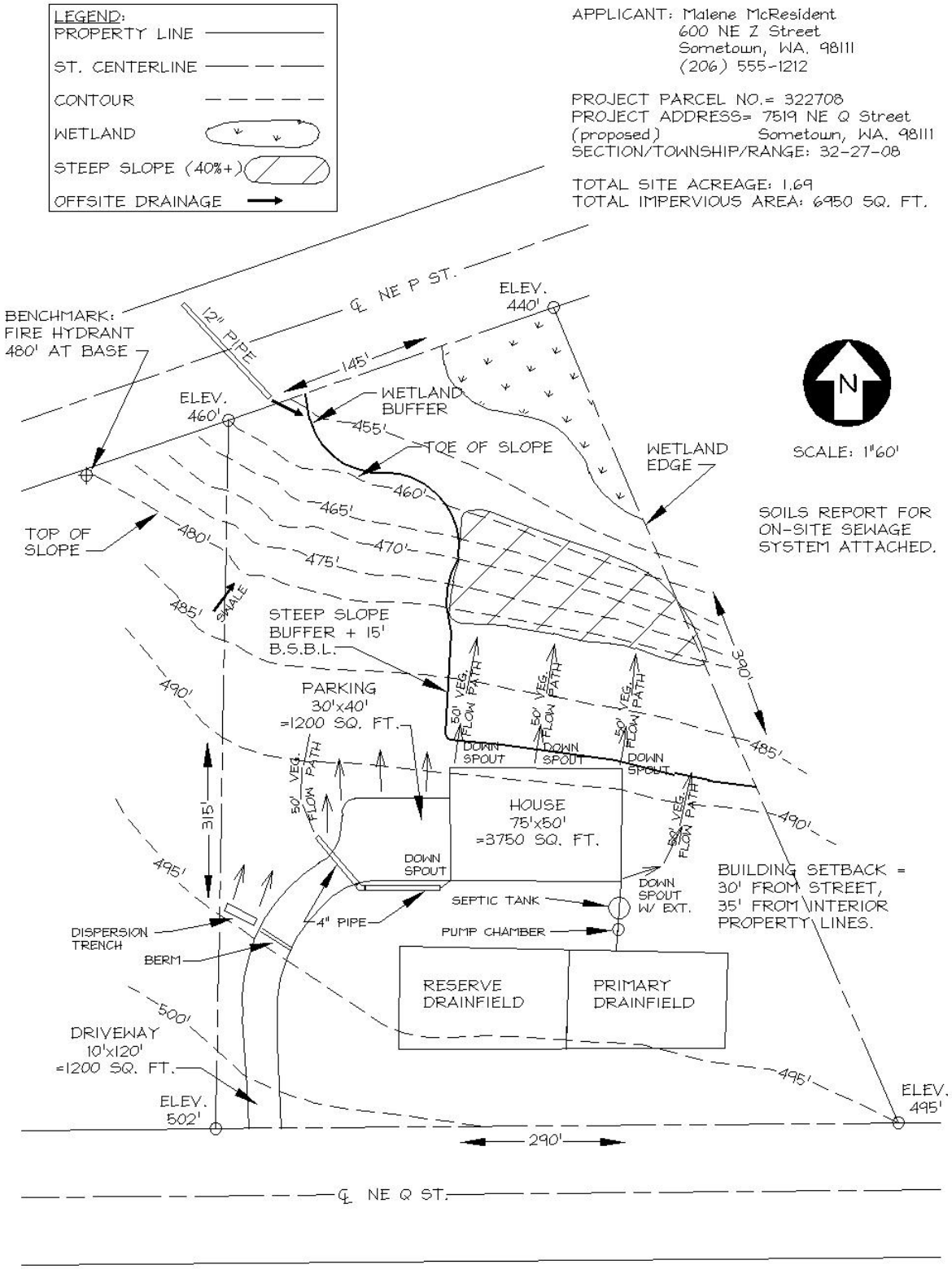

FIGURE C.4.2.B SINGLE FAMILY RESIDENCE – SMALL SITE ESC PLAN

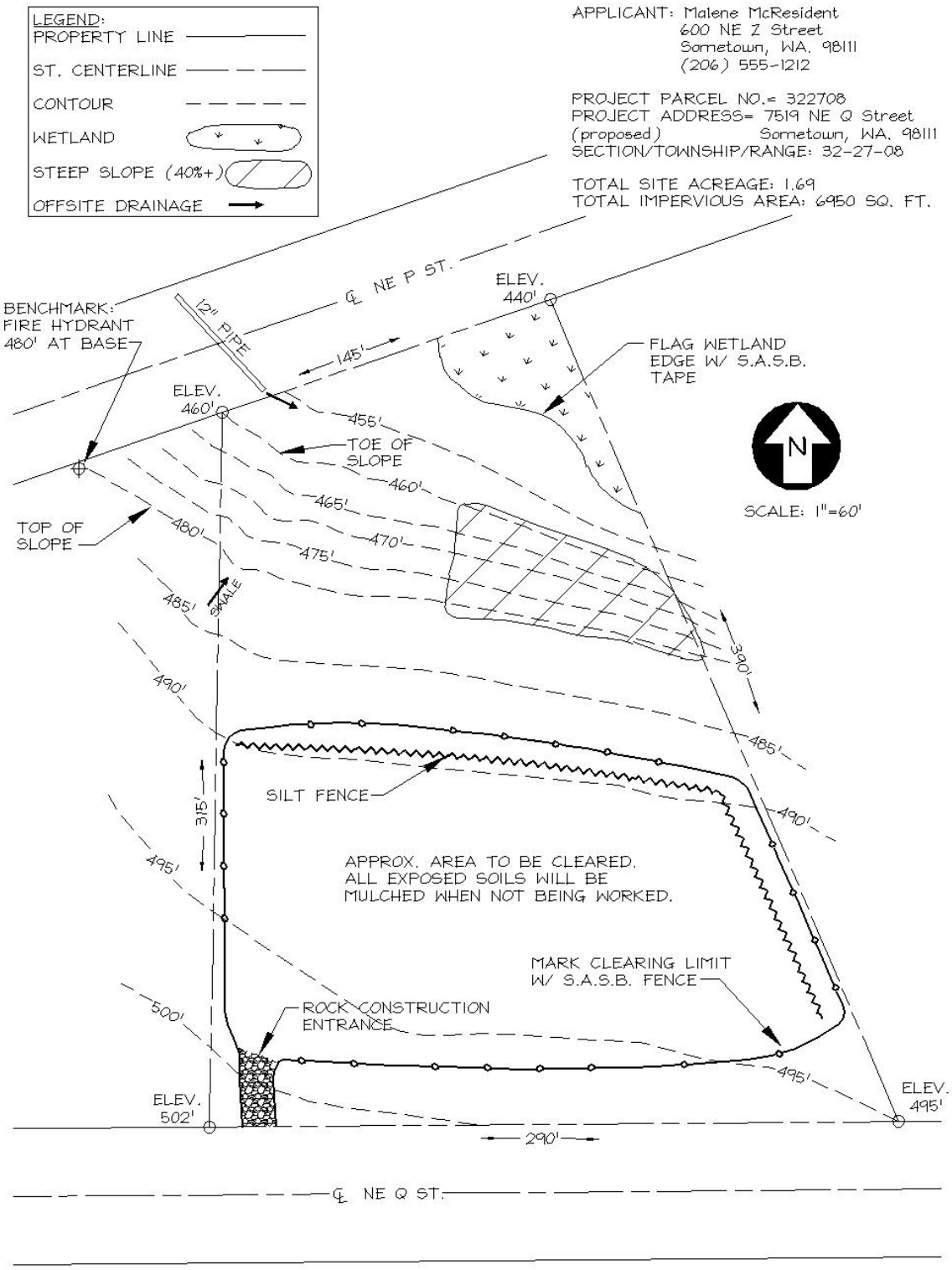

C.4.3 BMP DESIGN AND MAINTENANCE DETAILS

For each flow control BMP shown on a FCBMP site plan or in the right-of-way or tract of a subdivision site improvement plan, design details and maintenance instructions must be provided to clarify the design, installation, and long term maintenance and operation of the BMP.

C.4.3.1 DESIGN DETAILS

Design details are typically diagrams with notes that show a close-up view and/or cross-section of the BMP device and provide dimensions and specifications of size, placement, materials, components, downstream vegetation requirements, etc. Although diagrams are typical, there are many BMP devices (e.g., rock pads) for which only written details and specifications are more than sufficient. For some BMPs, design details may not be needed at all (e.g., the reduced footprint BMP).

Design details should be displayed on 8½" x 11" or 8½" x 14" paper with 1-inch margins so they can be directly recorded as attachments to the required **declaration of covenant and grant of easement** per Requirement 3 of Section C.1.3.3 (p. C-19). No scale is required for the diagrams used. The design details for each flow control BMP may be combined with its maintenance instructions on the same sheet or multiple sheets. Design details may also be placed on the flow control BMP site plan if there is room. To be recordable, however, the font size must be no less than 8-pt.

The BMP-specific figures and minimum design specifications presented in Section C.2 can be used to prepare the design details for a specific application of a flow control BMP to a particular ***site***/project. Also, the King County Water and Land Resources Division *Surface Water Design Manual* website contains downloadable, electronic versions of these and other figures/design specifications that can be adapted to a ***site***/project as well. The 2005 *Puget Sound Low Impact Development Manual* is yet another source of figures and design specifications. If a **proprietary version** of a flow control BMP is used, the manufacturer or installer will usually provide a diagram and ***site***-specific design specifications.

DRAFT

C.4.3.2 MAINTENANCE INSTRUCTIONS

Maintenance instructions are intended to explain to future property owners, the purpose of each flow control BMP and how it must be maintained and operated. A set of **minimum** maintenance instructions is provided for each flow control BMP presented in Section C.2. As King County gains more experience with the maintenance of these BMPs, updated maintenance instructions will be posted on the King County Water and Land Resources Division *Surface Water Design Manual* website. Also, the 2005 *Puget Sound Low Impact Development Manual* is yet another source of maintenance instructions. If a **proprietary version** of a flow control BMP is used, system-specific maintenance instructions from the manufacturer or installer must be included.

Maintenance instructions should be displayed on 8½" x 11" or 8½" x 14" paper with 1-inch margins so they can be directly recorded as attachments to the required **declaration of covenant and grant of easement** per Requirement 3 of Section C.1.3.3 (p. C-19). The maintenance instructions for each flow control BMP may be combined with its design details on the same sheet or multiple sheets. Maintenance instructions may also be placed on the flow control BMP site plan if there is room. To be recordable, however, the font size must be no less than 8-pt.

C.4.4 WRITTEN DRAINAGE ASSESSMENT

The written drainage assessment is a supporting document of the small project drainage plan and typically includes the following information:

- A **narrative** description of proposed project
- Any proposed **changes** to the project after preliminary approval
- A description of **proposed flow control BMPs** shown on the FCBMP site plan and how they were selected
- A description of **proposed ESC measures** shown on the plans and how they were selected
- A description of any necessary **special studies** or **soils reports**
- A description of any **other information** required by DDES.

C.4.4.1 EXAMPLE ASSESSMENT FOR A SINGLE FAMILY RESIDENCE

The purpose of this section is to illustrate the application of small project drainage requirements to a house being built on an existing lot. The flow control BMP site plan for this example is shown in Figure C.4.2.A (p.C-113), and the small site ESC plan is shown in Figure C.4.2.B (p. C-114). The written drainage assessment is as follows:

DRAFT

Drainage Assessment
Malene McResident Residence
7519 NE Q Street
Permit # B05R7184

The project is located east of Duvall on a 1.69-acre lot that is zoned RA. The lot is mostly forested with a wetland on the northeast corner of the property. The lot slopes down from Q Street on the south to P Street on the north. The slope on the south portion of the property is 6-14%. The house and its septic drainfields are proposed on the southern portion of the lot. The driveway will be approximately 10 feet by 120 feet (1,200 square feet) of impervious surface, the parking area 1,200 square feet, and the house 3,750 square feet. The total proposed impervious surface is 6,150 square feet. The total proposed clearing for the house, yard, drainfield areas, and driveway is 0.84 acres, which complies with the maximum of 50% allowed under KCC 16.82.150(C).

The wetland is a Category III wetland with a minimum required buffer width of 60 feet as determined in the preapplication meeting with DDES. By definition, the wetland is also a flood hazard area for which a floodplain and base flood elevation must be determined. Subject to DDES review and approval, an approximate base flood elevation of 452 has been estimated based on a downstream overflow elevation of 450 (see attached notes from the project's land surveyor). This elevation is well below the proposed house and driveway location.

The portion of the lot that is on a 40-50% slope is a steep slope hazard area as determined in the preapplication meeting with DDES. A 50-foot buffer and a 15-foot building setback is required, as shown on the flow control BMP plan. DDES determined that dispersing of the roof runoff toward the steep slope was acceptable, as shown on the plan.

Because the lot is larger than 22,000 square feet, it is subject to the Large Lot BMP Requirements in Appendix C of the *Surface Water Design Manual*. As mandated by these requirements, all proposed impervious surface (6,150 square feet) is targeted for application of flow control BMPs. As for new pervious surface (totaling 30,440 square feet), it is less than 35,000 square feet; therefore, no flow control BMPs are required for this surface.

To address the requirements for mitigation of target impervious surface, the applicability and feasibility of full dispersion was considered first. After subtracting out the wetland and the 50% portion of the lot that may be cleared per KCC 16.82, about 34,000 square feet of the lot will remain as unsubmerged native vegetated surface. This means that full dispersion could be applicable to up to 5,100 square feet of the target impervious surface (15% of 34,000). However, because of the lot's topography and the location of proposed clearing, there is no way to achieve the minimum required 100 feet of native vegetated flowpath segment that has a slope of 15% or flatter. Therefore, full dispersion is not feasible.

Full infiltration of roof runoff was considered next. According to the attached soils report for the septic system design, the soil on the project site is a sandy loam underlain by dense glacial till. Therefore, full infiltration is not applicable. This allowed for selection of basic dispersion as the flow control BMP of choice for application to the target impervious surfaces of this project.

To implement basic dispersion, the roof downspouts of the proposed house will discharge via splash blocks to minimum 50-foot vegetated flowpath segments located on slopes no steeper than 15% as shown on the flow control BMP site plan. No more than 700 square feet of roof area will discharge to any one splash block and vegetated flowpath segment. All of the flowpaths will be downslope of septic tank and drainfields.

The northern portion of the driveway will be discharged via sheet flow over a 10-foot vegetated flowpath segment to the north, as shown on the site plan. Runoff from approximately 700 square feet of the southern portion of the driveway will be collected by a rock-lined ditch and a concrete driveway berm and discharged to a 12-foot-long dispersion trench with notch board and then over a 25-foot vegetated flowpath segment toward the north. The 30-foot wide parking area will be discharged via sheet flow over a 2-foot-wide crushed rock strip and a vegetated flowpath segment of 15 feet as shown on the FCBMP site plan.

In order to prevent erosion and trap sediments within the project site, the following BMPs will be used approximately as shown on the ESC plan:

- Clearing limits will be marked by fencing or other means on the ground.
- The driveway will be constructed and graveled immediately. A rocked construction entrance will be placed at the end of the driveway. Dispersion trenches will be placed according to flow control requirements. Cleared areas accepting sheet flow from the driveway and parking area will be seeded and mulched.
- Runoff will not be allowed to concentrate and no water will be allowed to point discharge onto the slopes.
- Silt fencing will be placed along slope contours at the downslope limit of clearing.
- Mulch will be spread over all cleared areas of the site when they are not being worked. Mulch will consist of air-dried straw and chipped site vegetation.

DRAFT

DRAFT

C.5 REFERENCE SECTION

This section contains background and supplemental information on the **Small Project Drainage Review process** and an example **declaration of covenant and grant of easement** required for individual lot developments. The materials in this section are for reference only and may be updated over time. For the latest versions of these materials, see the King County Water and Land Resources Division, *Surface Water Design Manual* website.

C.5.1 SMALL PROJECT DRAINAGE REVIEW PROCESS

Drainage review, when required, is one of several reviews conducted by the Department of Development and Environmental Services (DDES) as part of its review process for County development permits and approvals. The process used for drainage review depends largely on the permit review process already established for different types of developments (e.g., subdivision, single family residence, or commercial building). For projects in Small Project Drainage Review, the review process primarily depends on whether the project is a proposed short plat or just proposed ***site*** improvements to an existing parcel or combination of parcels (individual lot project). Figure C.5.1.A (p. C-121) is a flow chart that shows the general drainage review process common to these two types of development. Below is a description of the Small Project Drainage Review process for each of these development types.

C.5.1.1 INDIVIDUAL LOT PROJECTS

DRAFT

This section describes the Small Project Drainage Review process for ***single family residential projects*** and ***agricultural projects*** that apply for a permit or approval to make specific ***site*** improvements such as construction of buildings, additions, driveways, or other impervious surfaces, or clearing of native vegetation.

When a permit/approval for a ***single family residential project*** or ***agricultural project*** requires drainage review as specified in the *SWDM*, DDES Site Engineering staff plot the project location on various maps (Assessor's, Kroll, topography, soils, etc.), research critical areas on or near the ***site***, and check for adopted area-specific conditions that might affect the drainage requirements for the ***site***. A DDES engineer reviews this information with respect to the proposed application. In most cases, a visit to the ***site*** is made to check existing conditions and drainage concerns.

The DDES engineer makes a determination of the type of drainage review required for the project and will either:

- Request additional information as needed,
- Request that a small project drainage plan (see Section C.4, p. C-109) be submitted,
- Request that an engineered drainage plan be submitted in accordance with Chapter 2 of the *Surface Water Design Manual*, OR
- Approve the permit subject to complying with an approved small project drainage plan or engineered drainage plan,
- Deny the permit application because it cannot meet required codes (e.g., a proposed new residence located in a FEMA floodway or in a channel migration hazard area).

C.5.1.2 SUBDIVISION PROJECTS

For ***single family residential projects*** that are subdivisions, the Small Project Drainage Review process generally includes the following elements:

Preapplication

The short plat process requires a mandatory preapplication meeting prior to formal submittal. The purpose of the preapplication meeting is to identify potential ***site*** constraints and regulatory requirements for the proposed project. If the short plat is subject to Small Project Drainage Review, the applicant may use this appendix or other information necessary to complete the small project drainage plan.

If the drainage requirements for a specific short plat are determined during a preapplication meeting, small project drainage plans (see Section C.4) may be submitted with the application. Section C.1.1 contains a series of questions that may help assess the requirements for a potential small project short plat. Submitting plans with the short plat permit application may expedite the review of the proposed application. However, there is risk that the plans prepared may exceed, or not adequately address, the yet-to-be-determined conditions of preliminary approval.

Preliminary Approval

After formal permit application, a more detailed review of the ***site*** and a determination of the type of drainage review required for the proposed subdivision is made. If subject to Small Project Drainage Review, the application may be placed on hold pending the completion of a small project drainage plan.

The applicant is responsible for submitting a small project drainage plan as detailed in Section C.4 (p. C-109). Upon completion and approval of the small project drainage plan (and other application requirements), preliminary approval may be granted, subject to the conditions of the small project drainage plan. For simple short plats that have no drainage issues triggering Targeted Drainage Review, engineered drainage plans are not usually required.

For proposed short plats requiring some engineering analysis, preliminary approval may be granted subject to the approval of engineering plans and a small project drainage plan. The applicant may choose to have the small project drainage plan incorporated into the engineered plans (prepared by a ***civil engineer***) or may elect to have a separate small project drainage plan that is not prepared by an engineer.

Proposed short plats that are subject to Small Project Drainage Review but cannot comply with the small project drainage requirements will be subject to Full Drainage Review. Any proposed short plats unable to comply with all applicable regulations (drainage or non-drainage) may be denied.

Engineering Review

Short plats receiving preliminary approval subject to the completion of a small project drainage plan and/or engineering plans are subject to engineering review. When separate plans are being prepared, submittals for engineering review should include both sets of plans to minimize review time and re-submittal fees.

Final Recording

All short plat applications must complete the requirements of final recording. Small projects may require additional note(s) be placed on the recorded documents that reference the approved small project drainage plan for future lot construction.

Note: Future building permit applications that do not comply with the conditions of the approved small project drainage plan (e.g., impervious coverage limits, location of BMPs, etc.) may be subject to Full Drainage Review.

DRAFT

FIGURE C.5.1.A SMALL PROJECT DRAINAGE REVIEW PROCESS

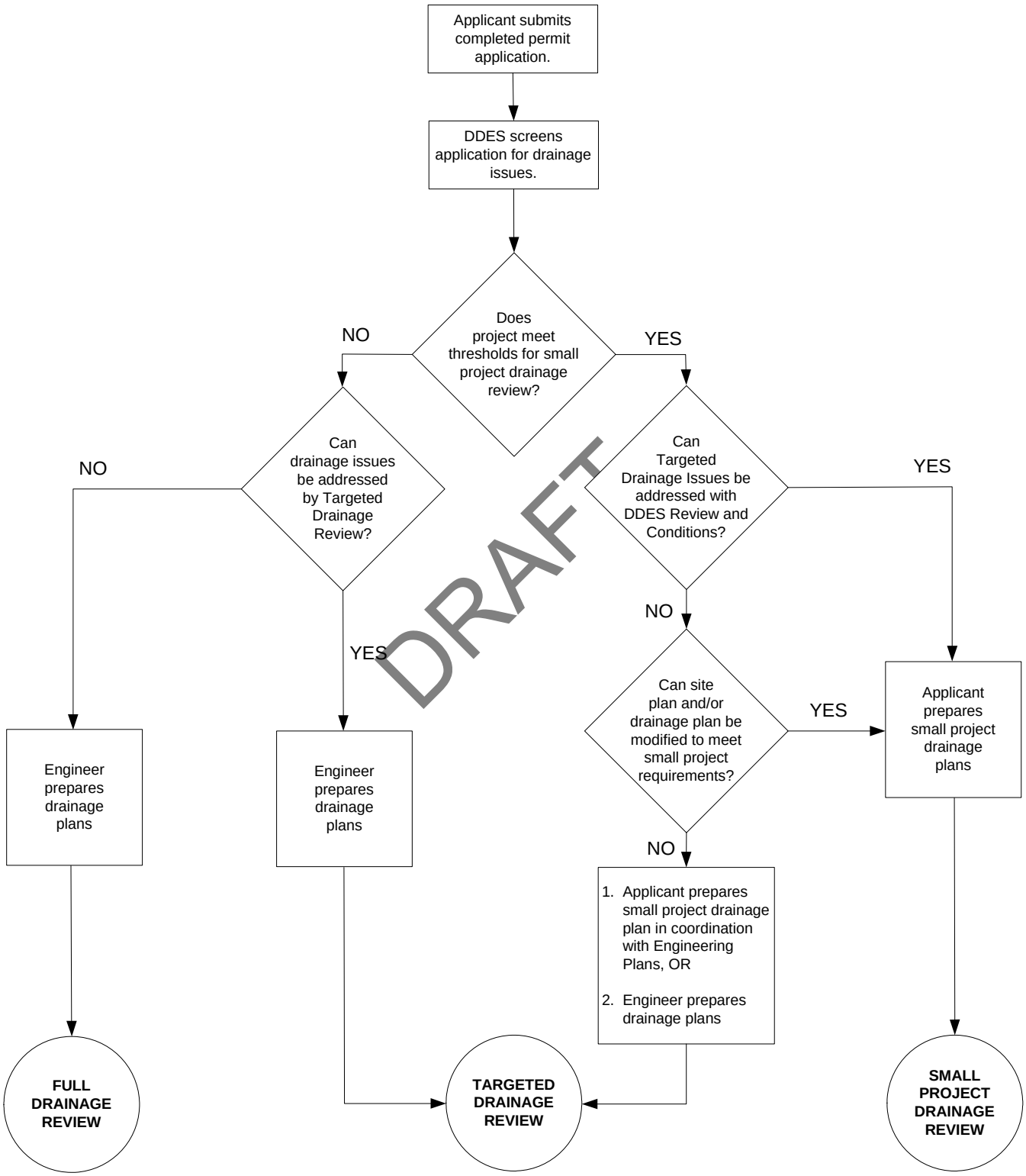

C.5.1.3 CHANGES FROM THE ORIGINAL APPROVED PLAN

Approval of small project drainage plans is based on a specific proposed project. Changes from the original approved small project drainage plan (e.g., additional impervious surface or clearing, right-of-way improvements) may require additional review by DDES engineering staff, or they may initiate Full Drainage Review, where a ***civil engineer*** must analyze the project and submit engineering plans. This will add additional review time and expense to the review process.

Changes proposed prior to permit issuance must be submitted through the standard revision process for the type of application.

Changes proposed after permit issuance (during construction) must be submitted through the DDES site inspector. Proposed changes shall not be implemented prior to DDES engineering approval. Changes performed without engineering approval may be subject to Stop Work notices and accompanying fees and reviews.

DRAFT

C.5.2 DECLARATION OF COVENANT AND GRANT OF EASEMENT FORM

The following covenant form or an equivalent form may be used to achieve the objectives specified in Requirement 3 of Section C.1.3.3 (p. C-19). In either case, the completed form must be reviewed and approved by DDES prior to recording. If a different form is used, DDES may require review and approval of the alternative form by DNRP. When preparing any form that grants an interest in real property, applicants are encouraged to seek legal advice from a professional qualified in real estate matters.

DRAFT

DRAFT

RECORDING REQUESTED BY AND
WHEN RECORDED MAIL TO:

_____

_____

_____

_____

RECORDING COVER SHEET

DECLARATION OF COVENANT AND GRANT OF EASEMENT

DRAFT

Grantor: _____

Grantee: _____

Legal Description: _____

_____

_____

Additional Legal(s) on: _____

Assessor's Tax Parcel ID#: _____

_____

_____

DECLARATION OF COVENANT AND GRANT OF EASEMENT
For Stormwater Flow Control Best Management Practices

IN CONSIDERATION of the following approved King County (check one of the following) ❑ residential building permit, ❑ commercial building permit, ❑ clearing and grading permit, ❑ subdivision permit, or ❑ short subdivision permit for Application No. _____ relating to real property ("Property") legally described as follows:

_____

_____

_____

_____

The Grantor(s), the owner(s) in fee of the above described parcel of land, hereby covenants with King County, a political subdivision of the state of Washington its successors in interest and assigns ("King County"), that it will observe, consent to, and abide by the conditions and obligations set forth and described in Paragraphs 1 and 2 and 4 through 7 below with regard to the Property, and hereby grants an access easement on and to the Property to King County, for the purposes described in Paragraph 3 below. Grantor(s) hereby grants, covenants, and agrees as follows:

DRAFT

1. Owner(s) of the Property shall retain, uphold, and protect the stormwater management devices, features, pathways, limits, and restrictions, known as flow control best management practices ("Flow Control BMPs"), shown on the approved Flow Control BMP Site Plan for the Property attached hereto and incorporated herein as Exhibit A.

2. Owner(s) of the Property shall at their own cost, operate, maintain, and keep in good repair, the Property's Flow Control BMPs as described in the approved Design and Maintenance Details for each BMP attached hereto and incorporated herein as Exhibit B.

3. King County shall have a nonexclusive perpetual access easement on the Property in order to ingress and egress over the Property for the sole purposes of inspecting and monitoring the Property's Flow Control BMPs, and if applicable in accordance with the terms of Paragraph 4 below, performing any corrective work required to bring the Property's Flow Control BMPs into compliance with Title 9 of the King County Code.

4. If King County determines that maintenance, repair, restoration, and/or mitigation work is required to be done to the Flow Control BMPs and has not been performed by the Property owner(s), the Director of the Water and Land Resources Division of the King County Department of Natural Resources and Parks shall give notice to the Property owner (s) of the specific maintenance, repair, restoration, and/or mitigation work (Work) required pursuant to Title 9 of the King County Code. The Manager shall also set a reasonable time in which the Work is to be completed by the Property owner(s). If the Work is not completed within the time set by the Division Director, King County may perform the required Work. Written notice will be sent to the Property owner(s) stating King County's intention to perform the Work. Performance of the Work by King County will not commence until at least seven (7) days after such notice is mailed. If, within the sole discretion of the Water and Land Resources Division Director, there exists an imminent or present danger, the owner hereby waives the seven (7) day notice period and the Work will begin immediately.

DRAFT

5. The owner(s) of the Property shall assume all responsibility for the cost of any Work required to be done to the Flow Control BMPs. Such responsibility shall include reimbursement to King County within thirty (30) days of the receipt of the invoice for any such Work performed by King County in accordance with the terms of Paragraph 3 above. Overdue payments will require payment of interest at the current legal rate as liquidated damages. In the event that King County does not receive reimbursement within the required time frame, it may elect to place a lien on the

Property and act upon the lien in accordance with the terms and procedures specified in Chapter 23.40 of the King County Code, as amended from time to time. If legal action is taken to enforce the provisions of this Paragraph, the prevailing party is entitled to costs and attorney's fees.

6. Apart from performing routine landscape maintenance, the Property owner(s) is (are) hereby required to obtain written approval from the Water and Land Resources Division Manager of the King County Department of Natural Resources and Parks prior to performing any alterations or modifications to the Flow Control BMPs. Any notice or consent required to be given or otherwise provided for by the provisions of this Declaration of Covenant and Grant of Easement shall be effective upon personal delivery, or three (3) days after mailing by Certified Mail, return receipt requested, whichever occurs sooner.

7. This Declaration of Covenant and Grant of Easement is intended to promote the efficient and effective management of surface water drainage on the Property, and it shall inure to the benefit of all the citizens of King County, its successors and assigns. This Declaration of Covenant and Grant of Easement shall run with the land and be binding upon Grantor(s), and Grantor's (s') successors in interest and assigns.

8. This Declaration of Covenant and Grant of Easement may be terminated by execution of a written agreement by Grantor(s) and King County expressing their mutual agreement to terminate this Declaration of Covenant and Grant of Easement.

DRAFT

IN WITNESS WHEREOF, this Declaration of Covenant and Grant of Easement is executed this _____day of _____, 20___.

By _____

Its _____

By _____

Its _____

STATE OF WASHINGTON)
)SS
COUNTY OF KING)

On this _____ day of _____, 20___, before me, the undersigned, a Notary Public in and for the State of _____, duly commissioned and sworn personally appeared , to me known to be the individual described in and who executed the foregoing instrument, and acknowledged to me that he signed and sealed the said instrument as h free and voluntary act and deed for the uses and purposes therein mentioned.

WITNESS my hand and official seal hereto affixed the day and year in this certificate above written.

DRAFT

_____

_____
Printed name
Notary Public in and for the State of Washington,
residing at _____

My appointment expires _____

APPENDIX D

EROSION AND SEDIMENT CONTROL (ESC) STANDARDS

DRAFT

KING COUNTY, WASHINGTON

SURFACE WATER DESIGN MANUAL

King County
Department of Natural Resources and Parks

January 24, 2005

DRAFT

APPENDIX D

EROSION AND SEDIMENT CONTROL STANDARDS

KING COUNTY, WASHINGTON

SURFACE WATER DESIGN MANUAL

DRAFT

Section D.1	**Erosion and Sediment Control Principles**	**D-3**
Section D.2	**General ESC Requirements**	**D-5**
Section D.3	**ESC Measures**	**D-7**
Section D.3.1	Clearing Limits	D-8
Section D.3.2	Cover Measures	D-10
Section D.3.3	Perimeter Protection	D-30
Section D.3.4	Traffic Area Stabilization	D-38
Section D.3.5	Sediment Retention	D-44
Section D.3.6	Surface Water Collection	D-56
Section D.3.7	Dewatering Control	D-65
Section D.3.8	Dust control	D-66
Section D.3.9	Flow Control	D-68
Section D.4	**ESC Performance and Compliance Provisions**	**D-69**
Section D.4.1	ESC Performance	D-69
Section D.4.2	Flexible Compliance	D-70
Section D.4.3	Roads and Utilities Compliance	D-70
Section D.4.4	Alternative and Experimental Measures	D-71
Section D.5	**ESC Implementation Requirements**	**D-73**
Section D.5.1	ESC Plan	D-73
Section D.5.2	Wet Season Requirements	D-73
Section D.5.3	Critical Areas Restrictions	D-74
Section D.5.4	Maintenance Requirements	D-75
Section D.5.5	Final Stabilization	D-76
Section D.5.6	NPDES Requirements	D-77
Section D.5.7	Forest Practice Permit Requirements	D-77
Section D.6	**Erosion and Sediment Control Plans**	**D-79**
Section D.7	**Small Site ESC**	**D-83**
Section D.7.1	Introduction to Small Site ESC	D-83
Section D.7.2	Small Site ESC Requirements	D-84
Section D.7.5	Small Site ESC Submittal Requirements	D-93
Section D.8	**Reference Section**	**D-97**
Section D.8.1	ESC Maintenance Report	D-97
Section D.8.2	Standard ESC Plan Notes	D-100
Section D.8.3	Recommended Construction Sequence	D-101
Section D.8.4	References	D-101

DRAFT

APPENDIX D

EROSION AND SEDIMENT CONTROL STANDARDS

The purpose of erosion and sediment control (ESC) is to prevent to the maximum extent practicable,[1] the transport of sediment to streams, wetlands, lakes, drainage systems, and adjacent properties during and following construction of a proposed project or other *land disturbing activity*.[2] In many circumstances it is difficult to completely prevent the transport of sediment to these features, either because of the difficulty in removing silt and clay-sized particles from runoff or because of large, infrequent storms that overwhelm the ESC facilities. It is the responsibility of those involved in the design and construction of any project to utilize a variety of strategies to minimize erosion and the transport of sediment to the maximum extent practicable. These strategies shall include overall project planning that reduces the risk of erosion through appropriate design and scheduling (see Section D.1) and traditional structural and cover measures, such as those described in Section D.3.

Erosion and sediment control is necessary because erosion rates associated with uncontrolled construction sites are much higher than normal rates—often a thousand or more times that of undeveloped land. The erosion rates increase during construction due to the removal of soil cover, alteration of soil characteristics, and changes in site topography. These vastly accelerated erosion rates, together with the higher rates typical of urbanized areas, result in excessive deposition of sediment in water resources and drainage facilities. This excessive erosion and consequent sediment deposition can result in devastating impacts to surface waters such as smothering of salmonid spawning beds, algal blooms in lakes, and flooding due to obstruction of drainage ways.

Applying erosion and sediment controls to construction sites can greatly reduce the delivery of sediment to surface waters. The chart on the next page shows how controls can significantly reduce the concentration of sediment leaving the project site.[3] Even with good controls, the concentration of sediment leaving the site will still be significantly higher than either undeveloped or developed conditions and this may result in significant adverse impacts; however, the likelihood of such impacts are dramatically less than if no controls are used.

DRAFT

[1] *Maximum extent practicable* means the use of best management practices that are available and capable of being designed, constructed and implemented in a reliable and effective manner including, but not limited to, consideration of site conditions and cost.

[2] *Land disturbing activity* means any activity that results in a change in the existing soil cover (both vegetative and non-vegetative and/or the existing soil topography. Land disturbing activities include, but are not limited to demolition, construction, clearing, grading, filling, excavation, and compaction. Land disturbing activity does not include tilling conducted as part of agricultural practices, landscape maintenance, or gardening.

[33] *Project site* means that portion of a site and any offsite areas subject to proposed project activities, alterations, and improvements. *Site* means a single parcel, or two or more contiguous parcels that are under common ownership or documented legal control, used as a single parcel for purposes of applying for authority from King County to carry out a development/project proposal. For projects located primarily within dedicated rights-of-way, site includes the entire width of right-of-way within the total length of right-of-way subject to improvements proposed by the project.

Organization of Appendix D

Appendix D is organized as follows:

- Section D.1, "Erosion and Sediment Control Principles" (p. D-3)
- Section D.2, "General ESC Requirements" (p. D-5)
- Section D.3, "ESC Measures" (p. D-7)
- Section D.5, "ESC Implementation Requirements" (p. D-73)
- Section D.6, "Erosion and Sediment Control Plans" (p. D-79)
- Section D.7, "Small Site ESC" (p. D-83)
- Section D.8, "Reference Section" (p. D-97)

MEDIAN STORM SEDIMENT CONCENTRATIONS
(METROPOLITAN WASHINGTON COUNCIL OF GOVERNMENTS, 1990)

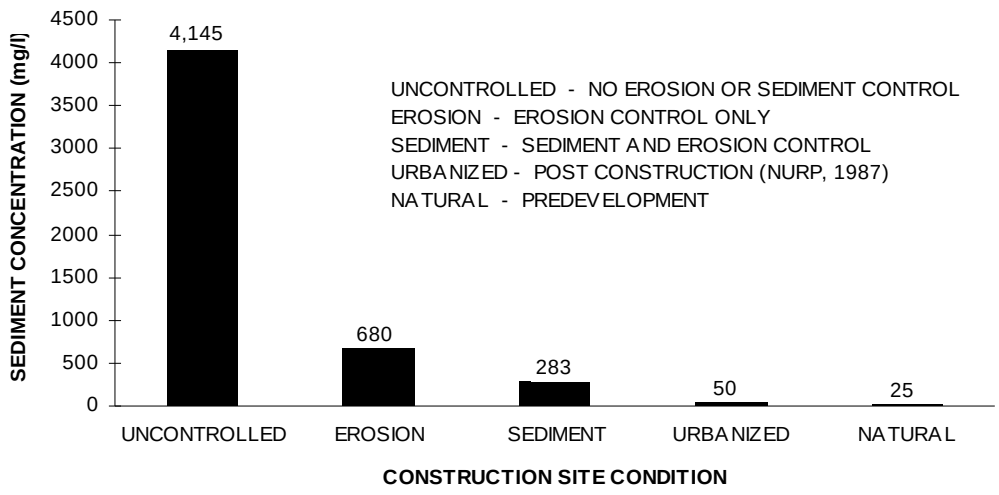

D.1 EROSION AND SEDIMENT CONTROL PRINCIPLES

This section provides basic information on the principles of erosion and sediment control that shall be applied to all projects in King County. This section is intended to highlight certain principles that are particularly critical to achieving effective control and that are the basis for the *Surface Water Design Manual's* Core Requirement #5: Erosion and Sediment Control. Projects that are consistent with these principles will generally meet the intent of the Core Requirement and this appendix, even if the details of the project are not entirely consistent with County standards. If a more complete treatment of ESC is needed, there are a number of useful references available (for example, Goldman et al., 1986). Additionally, information on permanent erosion control in natural channels is available in the *Guidelines for Bank Stabilization Projects* (King County, 1993).

- **Design the project to fit the natural topography, soils, and drainage patterns.** Through such practices as limiting disturbance of steeper slopes, avoiding disturbance of natural drainage ways, or using soils with a high infiltration rate to treat polluted runoff, the characteristics of the site can be used to minimize erosion and sediment transport.

- **Emphasize erosion control rather than sediment control.** Erosion control minimizes the entrainment of sediment by runoff or in the air due to wind, while sediment control removes entrained sediment from runoff. Erosion control is more efficient and cost-effective because it is nearly impossible to entirely remove sediment from runoff once it is entrained. Examples of erosion control include covering disturbed soils and controlling surface runoff using measures such as dikes and lined ditches. One illustration of the relative effectiveness of erosion control is straw mulch, which can reduce sediment concentrations in runoff over 90%.

  Since it is nearly impossible to entirely prevent erosion, it will also be necessary to incorporate sediment control facilities such as sedimentation ponds and silt fences. Sediment controls vary in their effectiveness, but typically reduce sediment concentrations 50 to 75%. However, sediment controls have little effect on the very fine sediment that causes turbidity, whereas cover measures, such as straw mulch, can be highly effective in reducing turbidity.

- **Minimize the extent and duration of area exposed.** Restricting clearing to only those areas necessary for construction is probably the single most effective form of erosion control. Additionally, exposing areas only as long as necessary reduces the risk of erosion substantially. This can be accomplished by planning the project so that areas are disturbed only when construction is imminent, and by mulching or seeding disturbed areas as soon as grading is completed.

- **Keep runoff velocities low.** While erosion of exposed soil begins with a single raindrop or the wind, the largest volumes of eroded materials are typically associated with concentrated runoff forming rills and gullies. One of the best ways to minimize erosion, therefore, is to reduce the possibility of concentrated runoff by intercepting runoff and conveying it in a non-erosive manner to a sediment pond or trap. This can include the use of dikes, swales, and benches to intercept runoff on slopes and ditches or drains to convey the intercepted runoff.

- **Retain sediment on site.** Sediment retention is less effective than erosion control measures, such as cover, but it is nevertheless a vital part of most projects because it is impossible to completely prevent erosion and the entrainment of sediment by runoff. Sediment can be retained by allowing it to settle out in ponds and traps or by filtering runoff from small areas through vegetation or use of a silt fence. Note that settling and filtration typically only remove sand-sized and coarse silt particles. Fine silts and clays cannot be removed in these ways, unless the runoff is released to vegetated areas or if chemical treatment, such as alum, or chitosan introduction or electrofloculation, are used.

- **Thoroughly monitor the site and maintain all ESC measures.** Maintenance and vigilance are the most vital components of effective ESC management. All measures require regular maintenance, monitoring and inspection. The overall site also needs to be constantly examined to ensure that all

DRAFT

areas are protected, that the measures are working together to provide maximum protection, and that all areas are mulched and/or vegetated as soon as possible.

- **Schedule major earthwork during the dry season.** The climate in the Puget Sound region is unique in that there are generally well-defined wet and dry seasons (see Figure D.3.1.A) and the *wet season*[4] is characterized by a large number of low-intensity, but frequent and long-lasting, storms. As a result, construction in the dry season[5] is a very effective form of erosion control. If construction does occur in the wet season, the need for regular maintenance is even more imperative.

FIGURE D.3.1.A YEARLY RAINFALL PATTERN

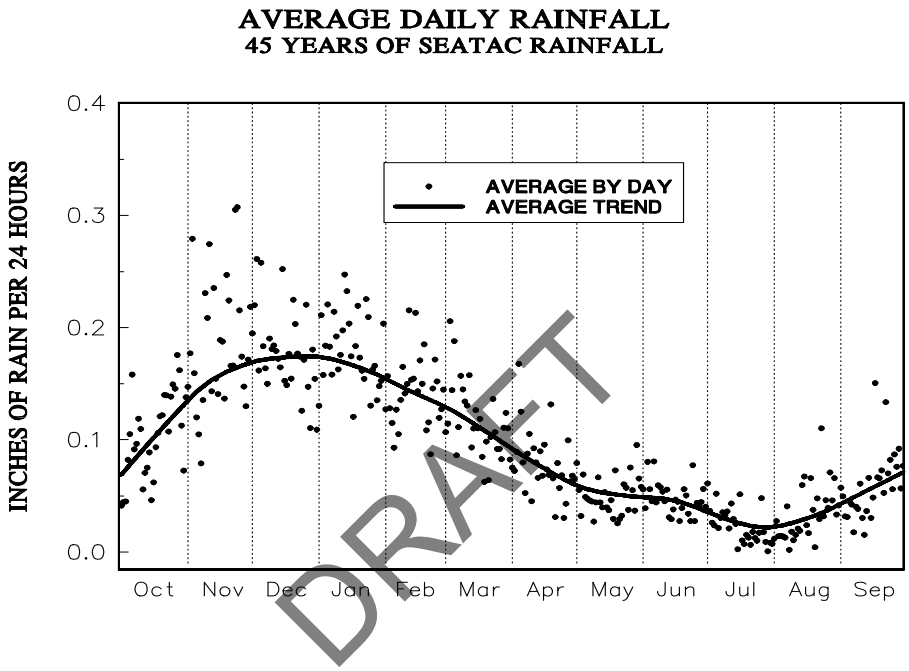

[4] *Wet season* means October 1st to April 30th.

[5] *Dry season* means May 1st to September 30th.

D.2 GENERAL ESC REQUIREMENTS

To satisfy the King County requirements for ESC, the following steps are required of all construction projects:

1. In accordance with Sections 2.3.1 and 2.3.3 of the *Surface Water Design Manual* (*SWDM*), prepare and submit a technical information report (TIR) and an ESC plan for King County review. Incorporate any King County review comments as necessary to comply with Core Requirement #5, Section 1.2.5 of the *SWDM* and the Erosion and Sediment Control Standards in this appendix.
2. Construct initial ESC measures on site according to the approved ESC plan.
3. Inspect and maintain all ESC measures throughout construction in accordance with the inspection and maintenance standards of Section D.5.4 (p. D-75).
4. Make any changes or additions necessary during construction to ensure that ESC measures perform in accordance with Core Requirement #5 and Sections D.3 and D.5.
5. Prior to final construction approval, meet all the conditions in Section D.5.5 (p. D-76) for final stabilization.

Proposed projects subject to Small Project Drainage Review as determined in Section 1.1.2.1 may satisfy King County ESC requirements by meeting the Small Site ESC requirements specified in Section D.7 (p. D-83) and reiterated in Appendix C of the *Surface Water Design Manual* titled, "Small Project Drainage Requirements."

DRAFT

DRAFT

D.3 ESC MEASURES

This section details the ESC measures that are required to minimize erosion and sediment transport off a construction site. These ESC measures represent *Best Management Practices (BMPs)*[6] for the control of erosion and entrained sediment as well as other impacts related to construction such as increased runoff due to land disturbing activities. The measures and practices are grouped into nine sections corresponding to each of the nine categories of ESC measures in Core Requirement #5, Section 1.2.5 of the *King County Surface Water Design Manual*. The introductory paragraphs at the beginning each section present the basic requirement for that category of measures, the purpose of those measures, installation requirements relative to construction activity, guidelines for the conditions of use, and other information relevant to all measures in the section/category. Compliance with each of the nine categories of the ESC measures, to the extent applicable and necessary to meet the performance criteria in Section D.4, and compliance with the ESC implementation requirements in Section D.5, constitutes overall compliance with King County's ESC Standards. *Note: Additional measures shall be required by the County if the existing standards are insufficient to protect adjacent properties, drainage facilities, or water resources.*

The standards for each individual ESC measure are divided into four sections:

1. Purpose
2. Conditions of Use
3. Design and Installation Specifications
4. Maintenance Requirements.

A code and symbol for each measure have also been included for ease of use on ESC plans. Note that the "Conditions of Use" always refers to site conditions. As site conditions change, ESC measures must be changed to remain in compliance with the requirements of this appendix.

Whenever compliance with King County ESC Standards is required, all of the following categories of ESC measures must be considered for application to the project site as detailed in the following sections:

1. **Clearing Limits:** Prior to any site clearing or grading, areas to remain undisturbed during project construction shall be delineated on the project's ESC plan and physically marked on the project site.
2. **Cover Measures:** Temporary and permanent cover measures shall be provided when necessary to protect disturbed areas. The intent of these measures is to prevent erosion by having as much area as possible covered during any period of precipitation.
3. **Perimeter Protection:** Perimeter protection to filter sediment from sheet flow shall be provided downstream of **all** disturbed areas prior to upslope grading.
4. **Traffic Area Stabilization:** Unsurfaced entrances, roads, and parking areas used by construction traffic shall be stabilized to minimize erosion and tracking of sediment offsite.
5. **Sediment Retention:** Surface water collected from all disturbed areas of the site shall be routed through a sediment pond or trap prior to release from the site, except those areas at the perimeter of the site small enough to be treated solely with perimeter protection. Sediment retention facilities shall be installed prior to grading any contributing area.
6. **Surface Water Collection:** Surface water collection measures (e.g., ditches, berms, etc.) shall be installed to intercept all surface water from disturbed areas, convey it to a sediment pond or trap, and discharge it downstream of any disturbed areas. Areas at the perimeter of the site, which are small enough to be treated solely with perimeter protection, do not require surface water collection. Significant sources of upstream surface water that drain onto disturbed areas shall be intercepted and

[6] *Best Management Practices (BMPs)* means the best available and reasonable physical, structural, managerial, or behavioral activities, that when singly or in combination, eliminate or reduce the contamination of surface and/or ground waters.

DRAFT

conveyed to a stabilized discharge point downstream of the disturbed areas. Surface water collection measures shall be installed concurrently with or immediately following rough grading and shall be designed, constructed, and stabilized as needed to minimize erosion.

7. **Dewatering Control:** The water resulting from construction site de-watering activities must be treated prior to discharge or disposed of as specified.
8. **Dust Control:** Preventative measures to minimize wind transport of soil shall be implemented when a traffic hazard may be created or when sediment transported by wind is likely to be deposited in water resources.
9. **Flow Control:** Surface water from disturbed areas must be routed through the project's onsite flow control facility or other provisions must made to prevent increases in the existing site conditions 2-year and 10-year runoff peaks discharging from the project site during construction.

D.3.1 CLEARING LIMITS

Prior to any site clearing or grading, those areas that are to remain undisturbed during project construction shall be delineated. At a minimum, clearing limits shall be installed at the edges of all critical area buffers and any other areas required to be left uncleared such as portions of the site subject to clearing limits under KCC 16.82.150, areas around significant trees identified to be retained, and other areas identified to be left undisturbed to protect sensitive features.

Purpose: The purpose of clearing limits is to prevent disturbance of those areas of the project site that are not designated for clearing or grading. This is important because limiting site disturbance is the single most effective method for reducing erosion. Clearing limits may also be used to control construction traffic, thus reducing the disturbance of soil and limiting the amount of sediment tracked off site.

When to Install: Clearing limits shall be installed prior to the clearing and/or grading of the site.

Measures to Use: Marking clearing limits by delineating the site with a continuous length of brightly colored survey tape is sometimes sufficient. The tape may be supported by vegetation or stakes, and it shall be 3 to 6 feet high and highly visible. Critical areas and their buffers require more substantial protection and shall be delineated with plastic or metal safety fences or stake and wire fences. Fencing may be required at the County's discretion to control construction traffic or at any location where greater protection is warranted. Permanent fencing may also be used if desired by the applicant. Silt fence, in combination with survey flagging, is also an acceptable method of marking critical areas and their buffers.

DRAFT

D.3.1.1 PLASTIC OR METAL FENCE

Code: FE Symbol:

Purpose

Fencing is intended to (1) restrict clearing to approved limits; (2) prevent disturbance of critical areas, their buffers, and other areas required to be left undisturbed; (3) limit construction traffic to designated construction entrances or roads; and (4) protect areas where marking with survey tape may not provide adequate protection.

Conditions of Use

To establish clearing limits, plastic or metal fence may be used:

1. At the boundary of critical areas, their buffers, and other areas required to be left uncleared.
2. As necessary to control vehicle access to and on the site (see Sections D.3.4.1 and D.3.4.2).

Design and Installation Specifications

1. The fence shall be designed and installed according to the manufacturer's specifications.
2. The fence shall be at least 3 feet high and must be highly visible.
3. The fence shall not be wired or stapled to trees.

Maintenance Requirements

1. If the fence has been damaged or visibility reduced, it shall be repaired or replaced immediately and visibility restored.
2. Disturbance of a critical area, critical area buffer, native growth retention area, or any other area required to be left undisturbed shall be reported to the County for resolution.

D.3.1.2 STAKE AND WIRE FENCE

Code: SWF Symbol:

Purpose

Fencing is intended to (1) restrict clearing to approved limits; (2) prevent disturbance of critical areas, their buffers, and other areas required to be left undisturbed; (3) limit construction traffic to designated construction entrances or roads; and (4) protect any areas where marking with survey tape may not provide adequate protection.

Conditions of Use

To establish clearing limits, stake or wire fence may be used:

1. At the boundary of critical areas, their buffers, and other areas required to be left uncleared.
2. As necessary, to control vehicle access to and on the site (see Sections D.3.4.1 and D.3.4.2).

Design and Installation Specifications

See Figure D.3.1.A for details.

Maintenance Requirements

1. If the fence has been damaged or visibility reduced, it shall be repaired or replaced immediately and visibility restored.
2. Disturbance of a critical area, critical area buffer, native growth retention area, or other area required to be left undisturbed shall be reported to the County for resolution.
3. The County may require more substantial fencing if the fence does not prevent encroachment into those areas that are not to be disturbed.

DRAFT

FIGURE D.3.1.A STAKE AND WIRE FENCE

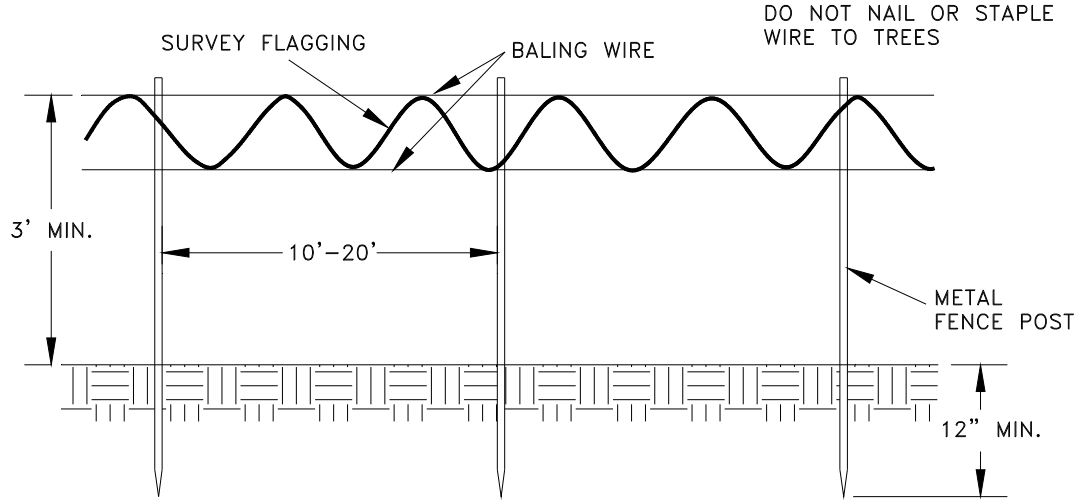

D.3.2 COVER MEASURES

DRAFT

Temporary and permanent cover measures shall be provided to protect all disturbed areas, including the faces of cut and fill slopes. Temporary cover shall be installed if an area is to remain unworked for more than seven days during the dry season (May 1 to September 30) or for more than two consecutive working days during the wet season (October 1 to April 30). These time limits may be relaxed if an area poses a low risk of erosion due to soil type, slope gradient, anticipated weather conditions, or other factors. Conversely, the County may reduce these time limits if site conditions warrant greater protection (e.g., adjacent to significant aquatic resources or highly erosive soils) or if significant precipitation (see Section D.5.2) is expected. Any area to remain unworked for more than 30 days shall be seeded or sodded, unless the County determines that winter weather makes vegetation establishment infeasible. During the wet season, slopes and stockpiles at 3H:1V or steeper and with more than ten feet of vertical relief shall be covered if they are to remain unworked for more than 12 hours. Also during the wet season, the material necessary to cover all disturbed areas must be stockpiled on site. The intent of these cover requirements is to have as much area as possible covered during any period of precipitation.

Purpose: The purpose of covering exposed soils is to prevent erosion, thus reducing reliance on less effective methods that remove sediment after it is entrained in runoff. Cover is the only practical method of reducing turbidity in runoff. Structural measures, such as silt fences and sediment ponds, are only capable of removing coarse particles and in most circumstances have little to no effect on turbidity.

When to Install: Any exposed soils that will remain unworked for more than the time limit set above shall be covered by the end of the working day. If the exposed area is to remain unworked for more than 30 days, the area shall be seeded with the temporary seed mix or an equivalent mix that will provide rapid protection (see Section D.3.2.5). If the disturbed area is to remain unworked for a year or more or if the area has reached final grade, permanent seed mix or an equivalent mix shall be applied.

Measures to Use: Cover methods include the use of surface roughening, mulch, erosion control nets and blankets, plastic covering, seeding, and sodding. Mulch and plastic sheeting are primarily intended to protect disturbed areas for a short period of time, typically days to a few months. Seeding and sodding are measures for areas that are to remain unworked for months. Erosion nets and blankets are to be used in conjunction with seeding steep slopes. The choice of measures is left to the designer; however, there are restrictions on the use of these methods, which are listed in the "Conditions of Use" and the "Design and Installation Specifications" sections for each measure.

The methods listed are by no means exhaustive. Variations on the standards presented here are encouraged if other cost-effective products or methods provide substantially equivalent or superior performance. Also, the details of installation can, and should, vary with the site conditions. A useful reference on the application of cover measures in the Puget Sound area is Horner, Guedrey, and Kortenhof (1990).

D.3.2.1 SURFACE ROUGHENING

Purpose

The purpose of surface roughening is to aid in the establishment of vegetative cover and to reduce runoff velocity, increase infiltration, and provide for sediment trapping through the provision of a rough soil surface. The rough soil surface may be created by operating a tiller or other equipment on the contour to form horizontal depressions or by leaving slopes in a roughened condition by not fine grading.

Conditions of Use

1. All slopes steeper than 3:1 and greater than 5 vertical feet require surface roughening.
2. Areas with grades steeper than 3:1 should be roughened to a depth of 2 to 4 inches prior to seeding.
3. Areas that will not be stabilized immediately may be roughened to reduce runoff velocity until seeding takes place.
4. Slopes with a stable rock face do not require roughening.
5. Slopes where mowing is planned should not be excessively roughened.

Design and Installation Specifications

There are different methods for achieving a roughened soil surface on a slope, and the selection of an appropriate method depends upon the type of slope. Roughening methods include stair-step grading, grooving, contour furrows, and tracking. See Figure D.3.2.A for information on tracking and contour furrows. Factors to be considered in choosing a method are slope steepness, mowing requirements, and whether the slope is formed by cutting or filling. Sole reliance on roughening for temporary erosion control is of limited effectiveness in intense rainfall events. Stair-step grading may not be practical for sandy, steep, or shallow soils.

1. Disturbed areas that will not require mowing may be stair-step graded, grooved, or left rough after filling
2. Stair Step grading is particularly appropriate in soils containing large amounts of soft rock. Each “step” catches material that sloughs from above, and provides a level site where vegetation can become established. Stairs should be wide enough to work with standard earth moving equipment. Stair steps must be on contour or gullies will form on the slope.
3. Areas that will be mowed (slopes less steep than 3:1) may have small furrows left by disking, harrowing, raking, or seed-planting machinery operated on the contour.
4. Graded areas with slopes greater than 3:1 but less than 2:1 should be roughened before seeding. This can be accomplished in a variety of ways, including “track walking” or driving a crawler tractor up and down the slope, leaving a pattern of cleat imprints parallel to slope contours.
5. Tracking is done by operating equipment up and down the slope to leave horizontal depressions in the soil.

DRAFT

Maintenance Standards

Periodically check roughened, seeded, planted, and mulched slopes for rills and gullies, particularly after a significant storm event. Fill these areas slightly above the original grade, then re-seed and mulch as soon as possible.

FIGURE D.3.2.A SURFACE ROUGHING

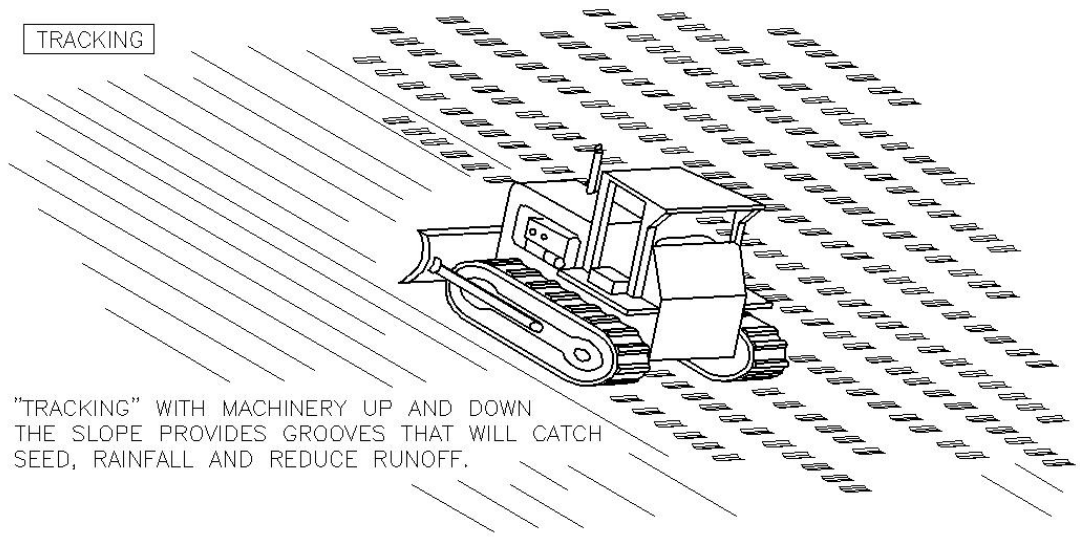

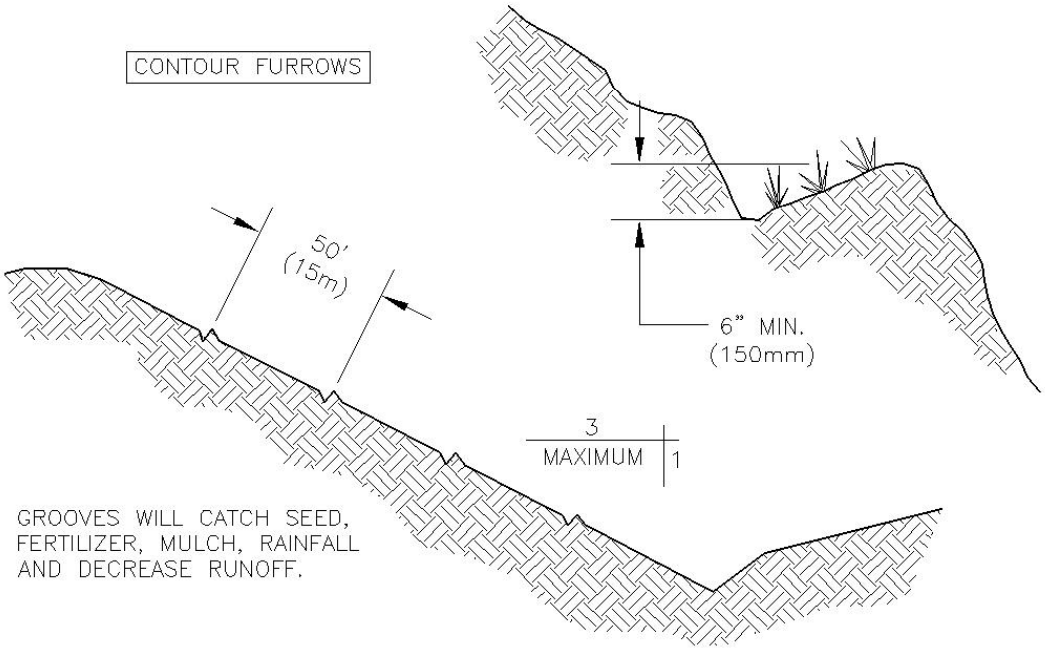

SURFACE ROUGHENING BY TRACKING AND CONTOUR FURROWS

D.3.2.2 MULCHING

Code: MU Symbol:

Purpose

The purpose of mulching soils is to provide immediate temporary protection from erosion. Mulch also enhances plant establishment by conserving moisture, holding fertilizer, seed, and topsoil in place, and moderating soil temperatures. There is an enormous variety of mulches that may be used. Only the most common types are discussed in this section.

Conditions of Use

As a temporary cover measure, mulch should be used:

1. On disturbed areas that require cover measures for less than 30 days
2. As a cover for seed during the wet season and during the hot summer months
3. During the wet season on slopes steeper than 3H:1V with more than 10 feet of vertical relief.

Design and Installation Specifications

For mulch materials, application rates, and specifications, see Table D.3.2.A. *Note: Thicknesses may be increased for disturbed areas in or near critical areas or other areas highly susceptible to erosion.*

Maintenance Standards

1. The thickness of the cover must be maintained.
2. Any areas that experience erosion shall be remulched and/or protected with a net or blanket. If the erosion problem is drainage related, then the drainage problem shall be assessed and alternate drainage such as interceptor swales may be needed to fix the problem and the eroded area remulched.

DRAFT

TABLE D.3.2.A MULCH STANDARDS AND GUIDELINES			
Mulch Material	**Quality Standards**	**Application Rates**	**Remarks**
Straw	Air-dried; free from undesirable seed and coarse material	2"-3" thick; 2-3 bales per 1000 sf or 2-3 tons per acre	Cost-effective protection when applied with adequate thickness. Hand-application generally requires greater thickness than blown straw. Straw should be crimped to avoid wind blow. The thickness of straw may be reduced by half when used in conjunction with seeding.
Wood Fiber Cellulose	No growth inhibiting factors	Approx. 25-30 lbs per 1000 sf or 1000-1500 lbs per acre	Shall be applied with hydromulcher. Shall not be used without seed and tackifier unless the application rate is at least doubled. Some wood fiber with very long fibers can be effective at lower application rates and without seed or tackifier.
Compost	No visible water or dust during handling. Must be purchased from supplier with Solid Waste Handling Permit.	2" thick min.; approx. 100 tons per acre (approx. 800 lbs per cubic yard)	More effective control can be obtained by increasing thickness to 3". Excellent mulch for protecting final grades until landscaping because it can be directly seeded or tilled into soil as an amendment. Sources for compost are available from the King County Commission for Marketing Recyclable Materials at (206) 296-4439. Compost may not be used in Sensitive Lake[7] basins unless analysis of the compost shows no phosphorous release.
Hydraulic Matrices (Bonded Fiber Matrix)	This mulch category includes hydraulic slurries composed of wood fiber, paper fiber or a combination of the two held together by a binding system. The BFM shall be a mixture of long wood fibers and various bonding agents.	Apply at rates from 3,000 lbs per acre to 4,000 lbs per acre and based on manufacturers recommendations	The BFM shall not be applied immediately before, during or immediately after rainfall so that the matrix will have an opportunity to dry for 24 hours after installation. Application rates beyond 2,500 pounds may interfere with germination and are not usually recommended for turf establishment. BFM is generally a matrix where all fiber and binders are in one bag, rather than having to mix components from various manufacturers to create a matrix. BFMs can be installed via helicopter in remote areas. They are approximately $1,000 per acre cheaper to install.
Chipped Site Vegetation	Average size shall be several inches.	2" minimum thickness	This is a cost-effective way to dispose of debris from clearing and grubbing, and it eliminates the problems associated with burning. Generally, it should not be used on slopes above approx. 10% because of its tendency to be transported by runoff. It is not recommended within 200 feet of surface waters. If seeding is expected shortly after mulch, the decomposition of the chipped vegetation may tie up nutrients important to grass establishment.

DRAFT

[7] *Sensitive lake* means a lake that has proved to be particularly prone to eutrophication; the County gives this designation when an active input plan has been adopted to limit the amount of phosphorous entering the lake.

D.3.2.3 NETS AND BLANKETS

Code: NE Symbol:

Purpose

Erosion control nets and blankets are intended to prevent erosion and hold seed and mulch in place on steep slopes and in channels so that vegetation can become well established. In addition, some nets and blankets can be used to permanently reinforce turf to protect drainage ways during high flows. Nets are strands of material woven into an open, but high-tensile strength net (for example, jute matting). Blankets are strands of material that are not tightly woven, but instead form a layer of interlocking fibers, typically held together by a biodegradable or photodegradable netting (for example, excelsior or straw blankets). They generally have lower tensile strength than nets, but cover the ground more completely. Coir (coconut fiber) fabric comes as both nets and blankets.

Conditions of Use

Erosion control nets and blankets should be used:

1. For permanent stabilization of slopes 2H:1V or greater and with more than 10 feet of vertical relief.
2. In conjunction with seed for final stabilization of a slope, not for temporary cover. However, they may be used for temporary applications as long as the product is not damaged by repeated handling. In fact, this method of slope protection is superior to plastic sheeting, which generates high-velocity runoff (see Section D.3.2.4).
3. For drainage ditches and swales (highly recommended). The application of appropriate netting or blanket to drainage ditches and swales can protect bare soil from channelized runoff while vegetation is established. Nets and blankets also can capture a great deal of sediment due to their open, porous structure. Synthetic nets and blankets may be used to permanently stabilize channels and may provide a cost-effective, environmentally preferable alternative to riprap.

DRAFT

Design and Installation Specifications

1. See Figure D.3.2.B and Figure D.3.2.C for **typical orientation and installation** of nettings and blankets. *Note: Installation is critical to the effectiveness of these products. If good ground contact is not achieved, runoff can concentrate under the product, resulting in significant erosion.*
2. With the variety of products available, it is impossible to cover all the details of appropriate use and installation. Therefore, it is critical that the design engineer thoroughly consults the **manufacturer's information** and that a site visit takes place in order to insure that the product specified is appropriate.
3. Jute matting must be used in conjunction with mulch (Section D.3.2.2). Excelsior, woven straw blankets, and coir (coconut fiber) blankets may be installed without mulch. There are many other types of **erosion control nets and blankets** on the market that may be appropriate in certain circumstances. Other types of products will have to be evaluated individually. In general, most nets (e.g., jute matting) require mulch in order to prevent erosion because they have a fairly open structure. Blankets typically do not require mulch because they usually provide complete protection of the surface.
4. Purely synthetic blankets are allowed but shall only be used for long-term stabilization of waterways. The organic blankets authorized above are better for slope protection and short-term waterway protection because they retain moisture and provide organic matter to the soil, substantially improving the speed and success of re-vegetation.

Maintenance Standards

1. Good contact with the ground must be maintained, and there must not be erosion beneath the net or blanket.
2. Any areas of the net or blanket that are damaged or not in close contact with the ground shall be repaired and stapled.
3. If erosion occurs due to poorly controlled drainage, the problem shall be fixed and the eroded area protected.

FIGURE D.3.2.B WATERWAY INSTALLATION

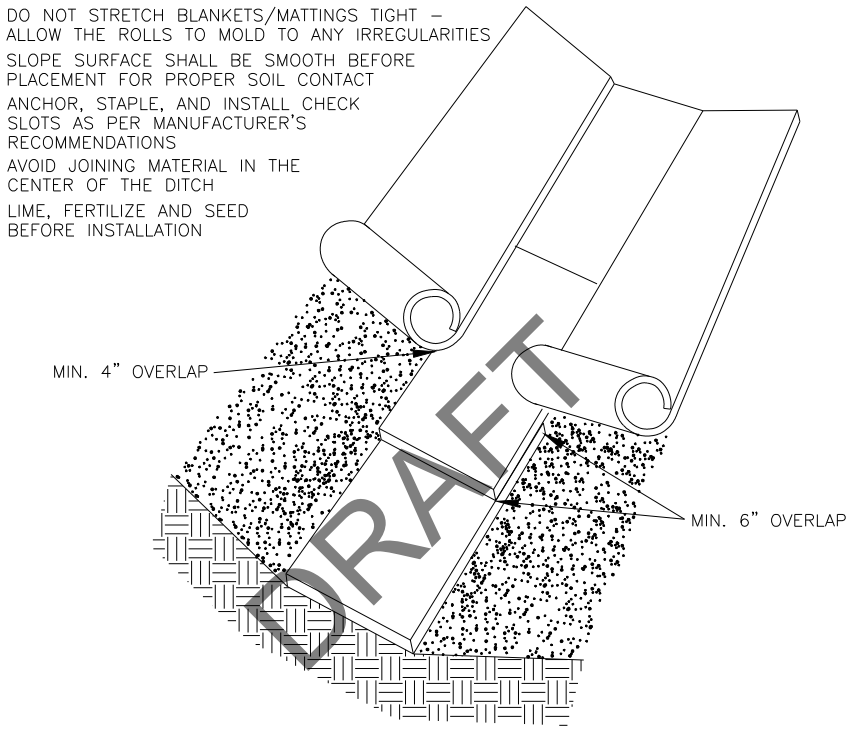

FIGURE D.3.2.C SLOPE INSTALLATION

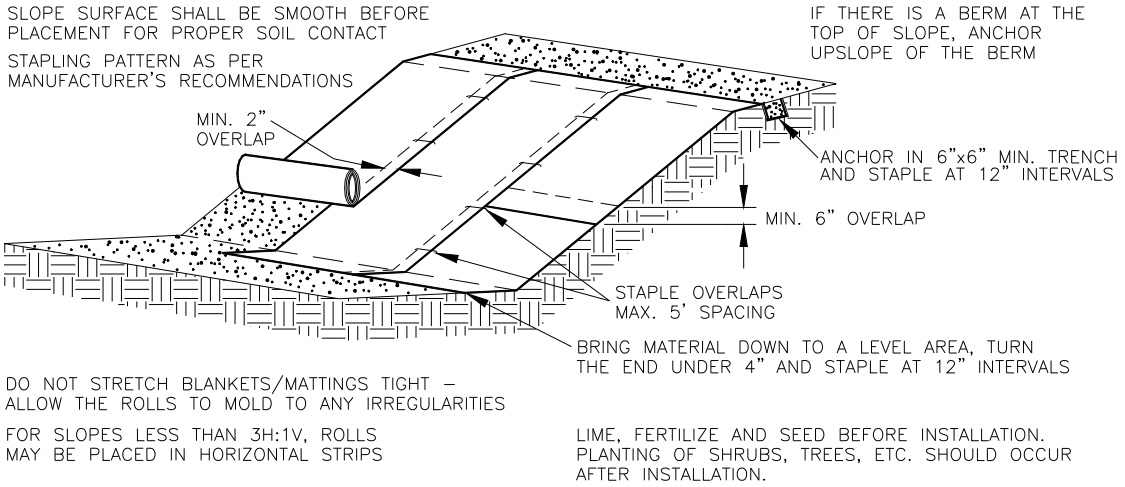

D.3.2.4 PLASTIC COVERING

Code: PC Symbol: PC

Purpose

Plastic covering provides immediate, short-term erosion protection to slopes and disturbed areas.

Conditions of Use

1. Plastic covering may be used on disturbed areas that require cover measures for less than 30 days.
2. Plastic is particularly useful for protecting cut and fill slopes and stockpiles. *Note: The relatively rapid breakdown of most polyethylene sheeting makes it unsuitable for long-term applications.*
3. Clear plastic sheeting may be used over newly-seeded areas to create a greenhouse effect and encourage grass growth. Clear plastic should not be used for this purpose during the summer months because the resulting high temperatures can kill the grass.
4. Due to rapid runoff caused by plastic sheeting, this method shall not be used upslope of areas that might be adversely impacted by concentrated runoff. Such areas include steep and/or unstable slopes.

Note: There have been many problems with plastic, usually attributable to poor installation and maintenance. However, the material itself can cause problems, even when correctly installed and maintained, because it generates high-velocity runoff and breaks down quickly due to ultraviolet radiation. In addition, if the plastic is not completely removed, it can clog drainage system inlets and outlets. It is highly recommended that alternatives to plastic sheeting be used whenever possible and that its use be limited.

DRAFT

Design and Installation Specifications

1. See Figure D.3.2.D for details.
2. Plastic sheeting shall have a minimum thickness of 0.06 millimeters.
3. If erosion at the toe of a slope is likely, a gravel berm, riprap, or other suitable protection shall be installed at the toe of the slope in order to reduce the velocity of runoff.

FIGURE D.3.2.D PLASTIC COVERING

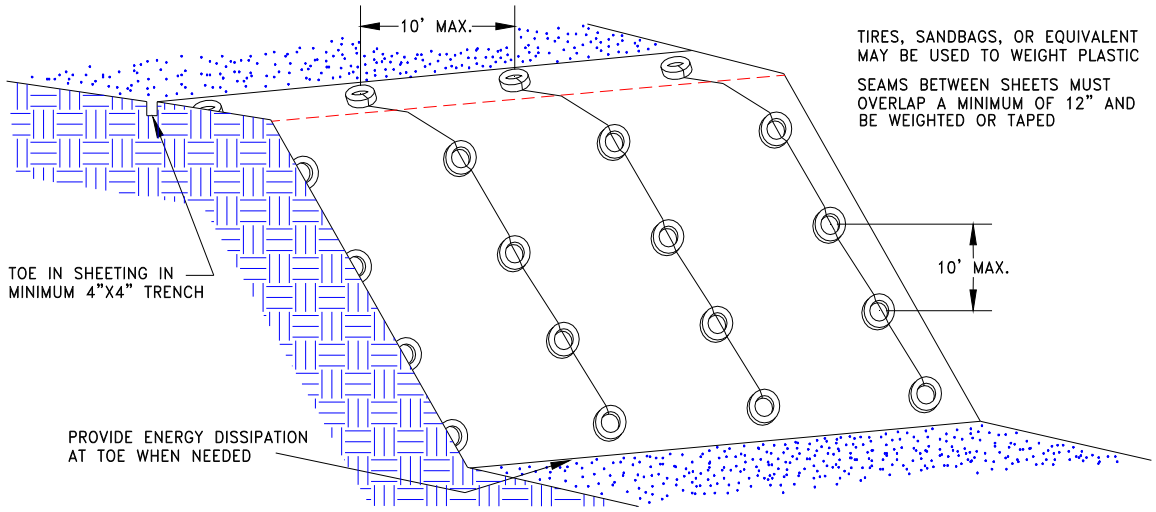

Maintenance Standards for Plastic Covering

1. Torn sheets must be replaced and open seams repaired.
2. If the plastic begins to deteriorate due to ultraviolet radiation, it must be completely removed and replaced.
3. When the plastic is no longer needed, it shall be completely removed.

D.3.2.5 STRAW WATTLES

Code: SW Symbol: 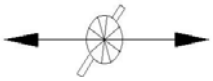

Purpose

Wattles are erosion and sediment control barriers consisting of straw wrapped in biodegradable tubular plastic or similar encasing material. Wattles may reduce the velocity and can spread the flow of rill and sheet runoff, and can capture and retain sediment. Straw wattles are typically 8 to 10 inches in diameter and 25 to 30 feet in length. The wattles are placed in shallow trenches and staked along the contour of disturbed or newly constructed slopes.

Conditions of Use

1. Install on disturbed areas that require immediate erosion protection.
2. Use on slopes requiring stabilization until permanent vegetation can be established.
3. Can be used along the perimeter of a project, as a check dam in unlined ditches and around temporary stockpiles
4. Wattles can be staked to the ground using willow cuttings for added revegetation.
5. Rilling can occur beneath and between wattles if not properly entrenched, allowing water to pass below and between wattles

DRAFT

Design and Installation Specifications

1. It is critical that wattles are installed perpendicular to the flow direction and parallel to the slope contour.
2. Narrow trenches should be dug across the slope, on contour, to a depth of 3 to 5 inches on clay soils and soils with gradual slopes. On loose soils, steep slopes, and during high rainfall events, the trenches should be dug to a depth of 5 to 7 inches, or ½ to 2/3 of the thickness of the wattle.
3. Start construction of trenches and installing wattles from the base of the slope and work uphill. Excavated material should be spread evenly along the uphill slope and compacted using hand tamping or other method. Construct trenches at contour intervals of 3 to 30 feet apart depending on the steepness of the slope, soil type, and rainfall. The steeper the slope the closer together the trenches should be constructed.
4. Install the wattles snugly into the trenches and abut tightly end to end. Do not overlap the ends.
5. Install stakes at each end of the wattle, and at 4 foot centers along the entire length of the wattle.
6. If required, install pilot holes for the stakes using a straight bar to drive holes through the wattle and into the soil.
7. At a minimum, wooden stakes should be approximately ¾ x ¾ x 24 inches. Willow cuttings or 3/8 inch rebar can also be used for stakes.

8. Stakes should be driven through the middle of the wattle, leaving 2 to 3 inches of the stake protruding above the wattle.

Maintenance Standards

1. Inspect wattles prior to forecasted rain, daily during extended rain events, after rain events, weekly during the wet season, and at two week intervals at all other times of the year.
2. Repair or replace split, torn, raveling, or slumping wattles
3. Remove sediment accumulations when exceeding ½ the height between the top of the wattle and the ground surface.

DRAFT

FIGURE D.3.2.E STRAW WATTLES

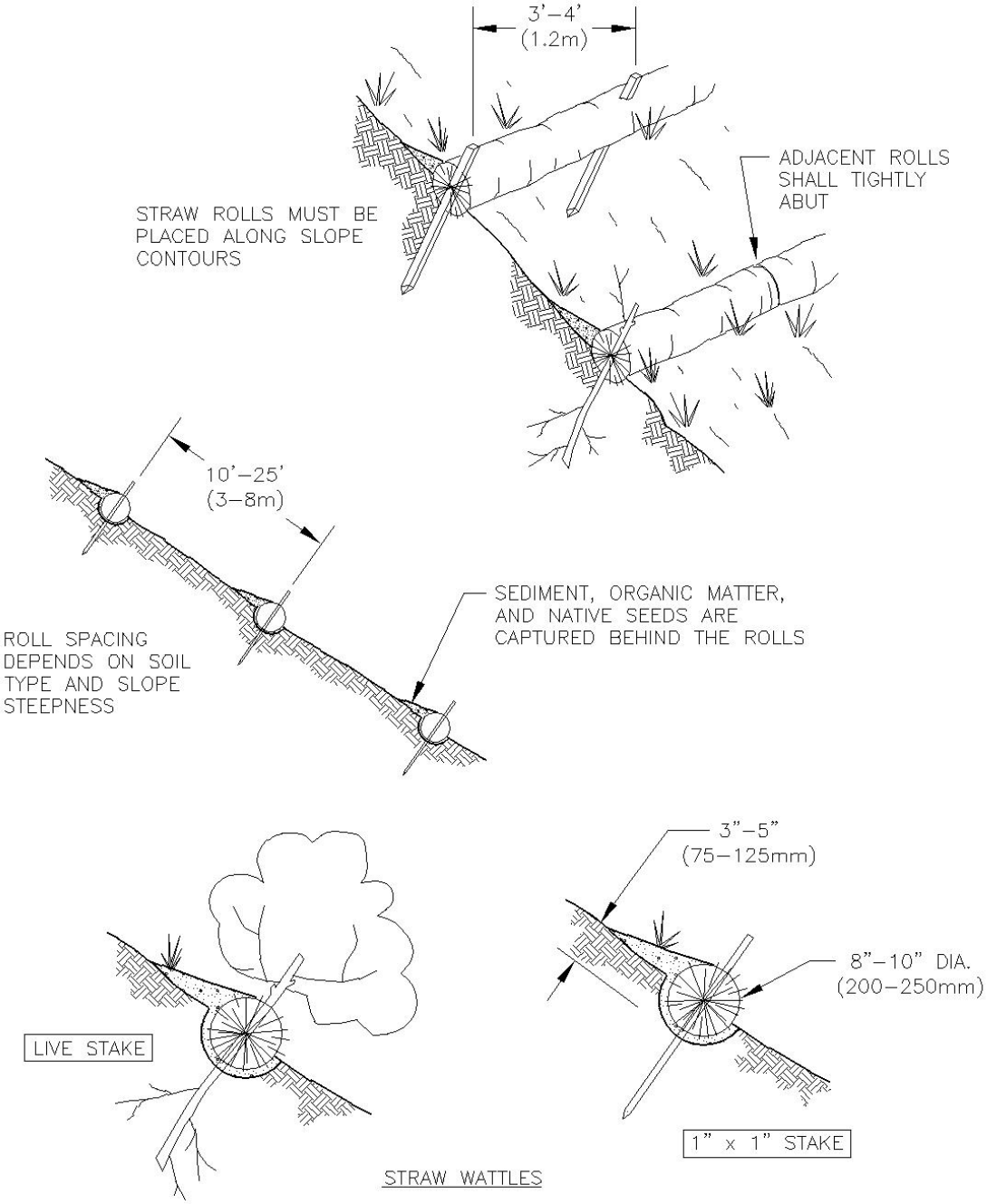

NOTES:

1. STRAW ROLL INSTALLATION REQUIRES THE PLACEMENT AND SECURE STAKING OF THE ROLL IN A TRENCH, 3" x 5" (75–125mm) DEEP, DUG ON CONTOUR. RUNOFF MUST NOT BE ALLOWED TO RUN UNDER OR AROUND ROLL.

D.3.2.6 TEMPORARY AND PERMANENT SEEDING

Code: SE Symbol: 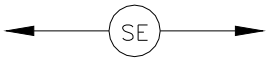

Purpose

Seeding is intended to reduce erosion by stabilizing exposed soils. A well-established vegetative cover is one of the most effective methods of reducing erosion.

Conditions of Use

1. Seeding shall be used throughout the project on **disturbed areas** that have reached final grade or that will remain unworked for more than 30 days.
2. **Vegetation-lined channels** shall be seeded. Channels that will be vegetated should be installed before major earthwork and hydroseeded or covered with a Bonded Fiber Matrix (BFM).
3. **Retention/detention ponds** shall be seeded as required.
4. At the County's discretion, seeding without mulch during the **dry season** is allowed even though it will take more than seven days to develop an effective cover. Mulch is, however, recommended at all times because it protects seeds from heat, moisture loss, and transport due to runoff.
5. At the beginning of the **wet season**, all disturbed areas shall be reviewed to identify which ones can be seeded in preparation for the winter rains (see Section D.5.2). Disturbed areas shall be seeded within one week of the beginning of the wet season. A sketch map of those areas to be seeded and those areas to remain uncovered shall be submitted to the DDES inspector. The DDES inspector may require seeding of additional areas in order to protect surface waters, adjacent properties, or drainage facilities.
6. At final site stabilization, all disturbed areas not otherwise vegetated or stabilized shall be seeded and mulched (see Section D.5.5).

DRAFT

Design and Installation Specifications

1. The best **time to seed** is April 1 through June 30, and September 1 through October 15. Areas may be seeded between July 1 and August 31, but irrigation may be required in order to grow adequate cover. Areas may also be seeded during the winter months, but it may take several months to develop a dense groundcover due to cold temperatures. The application and maintenance of mulch is critical for winter seeding.
2. To prevent seed from being washed away, confirm that **all required surface water control measures** have been installed.
3. The **seedbed** should be firm but not compacted because soils that are well compacted will not vegetate as quickly or thoroughly. Slopes steeper than 3H:1V shall be surface roughened. Roughening can be accomplished in a variety of ways, but the typical method is track walking, or driving a crawling tractor up and down the slope, leaving cleat imprints parallel to the slope contours.
4. In general, 10-20-20 N-P-K (nitrogen-phosphorus-potassium) **fertilizer** may be used at a rate of 90 pounds per acre. Slow-release fertilizers are preferred because they are more efficient and have fewer environmental impacts. It is recommended that areas being seeded for final landscaping conduct soil tests to determine the exact type and quantity of fertilizer needed. This will prevent the over-application of fertilizer. Disturbed areas within 200 feet of water bodies and wetlands must use slow-release low-phosphorus fertilizer (typical proportions 3-1-2 N-P-K).
5. The following requirements apply to **mulching**:
   a) Mulch is always required for seeding slopes greater than 3H:1V (see Section D.4.2.1).

b) If seeding during the wet season, mulch is required.

c) The use of mulch may be required during the dry season at the County's discretion if grass growth is expected to be slow, the soils are highly erodible due to soil type or gradient, there is a water body close to the disturbed area, or significant precipitation (see Section D.5.2) is anticipated before the grass will provide effective cover.

d) Mulch may be applied on top of the seed or simultaneously by hydroseeding.

6. **Hydroseeding** is allowed as long as tackifier is included. Hydroseeding with wood fiber mulch is adequate during the dry season. During the wet season, the application rate shall be doubled because the mulch and tackifier used in hydroseeding break down fairly rapidly. It may be necessary in some applications to include straw with the wood fiber, but this can be detrimental to germination.

7. Areas to be permanently landscaped shall use **soil amendments**. Good quality topsoil shall be tilled into the top six inches to reduce the need for fertilizer and improve the overall soil quality. Most native soils will require the addition of four inches of well-rotted compost to be tilled into the soil to provide a good quality topsoil. Compost used should meet Ecology publication 98-38 specifications for Grade A quality compost.

8. The **seed mixes** listed below include recommended mixes for both temporary and permanent seeding. These mixes, with the exception of the wetland mix, shall be applied at a rate of 120 pounds per acre. This rate may be reduced if soil amendments or slow-release fertilizers are used. Local suppliers should be consulted for their recommendations because the appropriate mix depends on a variety of factors, including exposure, soil type, slope, and expected foot traffic. Alternative seed mixes approved by the County may be used.

Table D.3.2.B presents the standard mix for those areas where just a temporary vegetative cover is required.

DRAFT

TABLE D.3.2.BTEMPORARY EROSION CONTROL SEED MIX

	% Weight	% Purity	% Germination
Chewings or red fescue *Festuca rubra var. commutata* or *Festuca rubra*	40	98	90
Annual or perennial rye *Lolium multiflorum* or *Lolium perenne*	40	98	90
Redtop or colonial bentgrass *Agrostis alba* or *Agrostis tenuis*	10	92	85
White dutch clover *Trifolium repens*	10	98	90

Table D.3.2.C provides just one recommended possibility for landscaping seed.

TABLE D.3.2.C LANDSCAPING SEED MIX			
	% Weight	**% Purity**	**% Germination**
Perennial rye blend *Lolium perenne*	70	98	90
Chewings and red fescue blend *Festuca rubra var. commutata* or *Festuca rubra*	30	98	90

This turf seed mix in Table D.3.2.D is for dry situations where there is no need for much water. The advantage is that this mix requires very little maintenance.

TABLE D.3.2.D LOW-GROWING TURF SEED MIX			
	% Weight	**% Purity**	**% Germination**
Dwarf tall fescue (several varieties) *Festuca arundinacea var.*	45	98	90
Dwarf perennial rye (Barclay) *Lolium perenne var. barclay*	30	98	90
Red fescue *Festuca rubra*	20	98	90
Colonial bentgrass *Agrostis tenuis*	5	98	90

DRAFT

Table D.3.2.E presents a mix recommended for bioswales and other intermittently wet areas. Sod shall generally not be used for bioswales because the seed mix is inappropriate for this application. Sod may be used for lining ditches to prevent erosion, but it will provide little water quality benefit during the wet season.

TABLE D.3.2.E BIOSWALE SEED MIX*			
	% Weight	**% Purity**	**% Germination**
Tall or meadow fescue *Festuca arundinacea* or *Festuca elatior*	75-80	98	90
Seaside/Creeping bentgrass *Agrostis palustris*	10-15	92	85
Redtop bentgrass *Agrostis alba* or *Agrostis gigantea*	5-10	90	80
* Modified Briargreen, Inc. Hydroseeding Guide Wetlands Seed Mix			

The seed mix shown in Table D.3.2.F is a recommended low-growing, relatively non-invasive seed mix appropriate for very wet areas that are not regulated wetlands (if planting in wetland areas, see Section 6.3.1 of the *Surface Water Design Manual*). Other mixes may be appropriate, depending on the soil type and hydrology of the area. Apply this mixture at a rate of 60 pounds per acre.

TABLE D.3.2.F WET AREA SEED MIX*

	% Weight	% Purity	% Germination
Tall or meadow fescue *Festuca arundinacea* or *Festuca elatior*	60-70	98	90
Seaside/Creeping bentgrass *Agrostis palustris*	10-15	98	85
Meadow foxtail *Alepocurus pratensis*	10-15	90	80
Alsike clover *Trifolium hybridum*	1-6	98	90
Redtop bentgrass *Agrostis alba*	1-6	92	85

* Modified Briargreen, Inc. Hydroseeding Guide Wetlands Seed Mix

DRAFT

The meadow seed mix in Table D.3.2.G is recommended for areas that will be maintained infrequently or not at all and where colonization by native plants is desirable. Likely applications include rural road and utility right-of-way. Seeding should take place in September or very early October in order to obtain adequate establishment prior to the winter months. The appropriateness of clover in the mix may need to be considered as this can be a fairly invasive species. If the soil is amended, the addition of clover may not be necessary.

TABLE D.3.2.G MEADOW SEED MIX

	% Weight	% Purity	% Germination
Redtop or Oregon bentgrass *Agrostis alba* or *Agrostis oregonensis*	40	92	85
Red fescue *Festuca rubra*	40	98	90
White dutch clover *Trifolium repens*	20	98	90

Maintenance Standards for Temporary and Permanent Seeding

1. Any seeded areas that fail to establish at least 80 percent cover within one month shall be reseeded. If reseeding is ineffective, an alternate method, such as sodding or nets/blankets, shall be used. If winter weather prevents adequate grass growth, this time limit may be relaxed at the discretion of the County when critical areas would otherwise be protected.

2. After adequate cover is achieved, any areas that experience erosion shall be re-seeded and protected by mulch. If the erosion problem is drainage related, the problem shall be fixed and the eroded area re-seeded and protected by mulch.
3. Seeded areas shall be supplied with adequate moisture, but not watered to the extent that it causes runoff.

D.3.2.7 SODDING

Code: SO Symbol:

Purpose

The purpose of sodding is to establish permanent turf for immediate erosion protection and to stabilize drainage ways where concentrated overland flow will occur.

Conditions of Use

Sodding may be used in the following areas:

1. Disturbed areas that require short-term or long-term cover
2. Disturbed areas that require immediate vegetative cover
3. All waterways that require vegetative lining (except biofiltration swales—the seed mix used in most sod is not appropriate for biofiltration swales). Waterways may also be seeded rather than sodded, and protected with a net or blanket (see Section D.3.2.3).

Design and Installation Specifications

Sod shall be free of weeds, of uniform thickness (approximately 1-inch thick), and shall have a dense root mat for mechanical strength.

The following steps are recommended for sod installation:

1. Shape and smooth the surface to final grade in accordance with the approved grading plan.
2. Amend two inches (minimum) of well-rotted compost into the top six inches of the soil if the organic content of the soil is less than ten percent. Compost used should meet Ecology publication 98-38 specifications for Grade A quality compost.
3. Fertilize according to the supplier's recommendations. Disturbed areas within 200 feet of water bodies and wetlands must use non-phosphorus fertilizer.
4. Work lime and fertilizer 1 to 2 inches into the soil, and smooth the surface.
5. Lay strips of sod beginning at the lowest area to be sodded and perpendicular to the direction of water flow. Wedge strips securely into place. Square the ends of each strip to provide for a close, tight fit. Stagger joints at least 12 inches. Staple on slopes steeper than 3H:1V.
6. Roll the sodded area and irrigate.
7. When sodding is carried out in alternating strips or other patterns, seed the areas between the sod immediately after sodding.

Maintenance Standards

If the grass is unhealthy, the cause shall be determined and appropriate action taken to reestablish a healthy groundcover. If it is impossible to establish a healthy groundcover due to frequent saturation, instability, or some other cause, the sod shall be removed, the area seeded with an appropriate mix, and protected with a net or blanket.

DRAFT

D.3.2.8 POLYACRYLAMIDE FOR SOIL EROSION PROTECTION

Purpose

Polyacrylamide (PAM) is used on construction sites to prevent soil erosion. Applying PAM to bare soil in advance of a rain event significantly reduces erosion and controls sediment in two ways. First, PAM increases the soil's available pore volume, thus increasing infiltration through flocculation and reducing the quantity of stormwater runoff. Second, it increases flocculation of suspended particles and aids in their deposition, thus reducing stormwater runoff turbidity and improving water quality.

Conditions of Use

1. PAM shall not be directly applied to water or allowed to enter a water body.
2. PAM may be applied to wet soil, but dry soil is preferred due to less sediment loss.
3. PAM will work when applied to saturated soil but is not as effective as applications to dry or damp soil.
4. PAM may be applied only to the following types of bare soil areas that drain to a sediment trap or a sediment pond:
   - Staging areas
   - Stockpiles
   - Pit sites
   - Balanced cut and fill earthwork
   - Haul roads prior to placement of crushed rock surfacing
   - Compacted soil road base
5. PAM may be applied only during the following phases of construction:
   - During rough grading operations
   - After final grade and before paving or final seeding and planting
   - During a winter shut down of site work. In the case of winter shut down, or where soil will remain unworked for several months, PAM should be used together with mulch.
6. Do not use PAM on a slope that flows directly to a stream or wetland. The stormwater runoff shall pass through a sediment control measure prior to discharging to surface waters.

DRAFT

Design and Installation Specifications

1. PAM must be applied using one of two methods of application, "preferred" or "alternative." The specifications for these methods are described under separate headings below.
2. PAM may be applied in dissolved form with water, or it may be applied in dry, granular or powdered form. The preferred application method is the dissolved form.
3. PAM is to be applied at a maximum rate of ½ pound PAM per 1000 gallons of water per 1 acre of bare soil. Table D.3.2.H may be used to determine the PAM and water application rate for disturbed soil areas. Higher concentrations of PAM **do not** provide any additional effectiveness.
4. Do not add PAM to water discharging from the site.
5. PAM shall be used in conjunction with other ESC measures and not in place of them. When the total drainage area is greater than or equal to 3 acres, PAM treated areas shall drain to a sediment pond per Section D.3.5.2. For drainage areas less than 3 acres, PAM treated areas must drain to a sediment trap per Section D.3.5.1. Other normally required sediment control measures such as perimeter protection

measures (Section D.3.3) and surface water collection measures (Section D.3.6) shall be applied to PAM treated areas.

6. All areas not being actively worked shall be covered and protected from rainfall. PAM shall not be the only cover BMP used.
7. Keep the granular PAM supply out of the sun. Granular PAM loses its effectiveness in three months after exposure to sunlight and air.
8. Care must be taken to prevent spills of PAM powder onto paved surfaces. PAM, combined with water, is very slippery and can be a safety hazard. During an application of PAM, prevent over-spray from reaching pavement as the pavement will become slippery. If PAM powder gets on skin or clothing, wipe it off with a rough towel rather than washing with water. Washing with water only makes cleanup more difficult, messier, and time consuming.
9. The specific PAM copolymer formulation must be anionic. Cationic PAM shall not be used in any application because of known aquatic toxicity concerns. Only the highest drinking water grade PAM, certified for compliance with ANSI/NSF Standard 60 for drinking water treatment, may be used for soil applications. The Washington State Department of Transportation (WSDOT) lists approved PAM products on their web page. All PAM use shall be reviewed and approved by DDES.
10. The PAM anionic charge density may vary from 2 – 30 percent; a value of 18 percent is typical. Studies conducted by the United States department of Agriculture (USDA)/ARS demonstrated that soil stabilization was optimized by using very high molecular weight (12 – 15 mg/mole), highly anionic (>20% hydrolysis) PAM.
11. PAM must be "water soluble" or "linear" or "non-cross-linked." Cross-linked or water absorbent PAM, polymerized in highly acidic (pH<2) conditions, are used to maintain soil moisture content.

DRAFT

TABLE D.3.2.H PAM AND WATER APPLICATION RATES

Disturbed Area (ac)	PAM (lbs)	Water (gal)
0.50	0.25	500
1.00	0.50	1,000
1.50	0.75	1,500
2.00	1.00	2,000
2.50	1.25	2,500
3.00	1.50	3,000
3.50	1.75	3,500
4.00	2.00	4,000
4.50	2.25	4,500
5.00	2.50	5,000

Preferred Application Method

1. Pre-measure the area where PAM is to be applied and calculate the amount of product and water necessary to provide coverage at the specified application rate (1/2 pound PAM/1,000 gallons/acre).
2. Dissolve pre-measured dry granular PAM with a known quantity of clean water in a bucket several hours or overnight. PAM has infinite solubility in water, but dissolves very slowly. Mechanical mixing will help dissolve PAM. Always add PAM to water – not water to PAM.
3. Pre-fill the water truck about 1/8 full with water. The water does not have to be potable, but it must have relatively low turbidity – in the range of 20 NTU or less.

4. Add PAM/Water mixture to the truck.
5. Completely fill the water truck to specified volume.
6. Spray PAM/Water mixture onto dry soil until the soil surface is uniformly and completely wetted.

Alternate Application Method

PAM may also be applied as a powder at the rate of 5 pounds per acre. This must be applied on a day that is dry. For areas less than 5-10 acres, a hand-held “organ grinder” fertilized spreader set to the smallest setting will work. Tractor mounted spreaders will work for larger areas.

Maintenance Standards

1. PAM may be reapplied on actively worked areas after a 48-hour period
2. Reapplication is not required unless PAM treated soil is disturbed or unless turbidity levels show the need for an additional application. If PAM treated soil is left undisturbed, a reapplication may be necessary after two months. More PAM applications may be required for steep slopes, silty and clay soils, (USDA classification Type "C" and "D" soils), long grades, and high precipitation areas. When PAM is applied first to bare soil and then covered with straw, a reapplication may not be necessary for several months.

D.3.2.9 COMPOST BLANKETS

DRAFT

Code: COBL Symbol:

Purpose

Compost blankets are intended to:

- Provide immediate temporary protection from erosion by protecting soil from rainfall and slowing flow velocity over the soil surface.
- Enhance temporary or permanent plant establishment by conserving moisture, holding seed and topsoil in place, providing nutrients and soil microorganisms, and moderating soil temperatures.
- Compost blankets, applied at the proper thickness and tilled into the soil, are also an option for amending soils for permanent landscaping.
- Compost generally releases and adds phosphorous to stormwater. Therefore, compost blankets are not recommended for use in watersheds where phosphorous sensitive water resources are located. Unless prior approval is given by the County, they should not be used in Sensitive Lake Watersheds.

Conditions of Use

1. Compost blankets may be used unseeded on disturbed areas that require temporary cover measures up to 1 year. Compost applied as temporary cover may be reclaimed and re-used for permanent cover.
2. Compost provides cover for protecting final grades until landscaping can be completed as it can be directly seeded or tilled into soil as an amendment.
3. Compost blankets meet mulch requirements for seed.
4. Seed may be applied to a compost blanket at any time for permanent or temporary stabilization of disturbed areas. Seed may be applied prior to blanket application, on top of blankets, or injected and mixed into the compost as it is applied.
5. Compost blankets may be applied on slopes up to 2H:1V.

Design and Installation Specifications

1. Compost shall be applied at a minimum of 2 inches thick, unless otherwise directed by an ESC supervisor or King County. At an application of 2 inches, this will equal approximately 100 tons per acre (compost generally weighs approximately 800 lbs per cubic yard). Thickness shall be increased at the direction of the design engineer for disturbed areas in or near critical areas or other areas highly susceptible to erosion.
2. Compost shall meet criteria in WAC 173-350-220 (10) for Designation of Composted Materials.
3. Compost shall be obtained from a supplier meeting the requirements of WAC 173-350-220.
4. Compost blankets shall be applied over the top of the slope to which it is applied, to prevent water from running under the blanket
5. Compost blankets shall not be used in areas exposed to concentrated flow (e.g. channels, ditches, dikes)

Maintenance Standards

1. The specified thickness of the blanket/cover must be maintained.
2. Any areas that show signs of erosion must be re-mulched. If the erosion problem is drainage related, then the drainage problem must first be remedied and then the eroded area re-mulched.

DRAFT

D.3.3 PERIMETER PROTECTION

Perimeter protection to filter sediment from sheetwash shall be located downslope of all disturbed areas and shall be installed prior to upslope grading. Perimeter protection includes the use of vegetated strips as well as, constructed measures, such as silt fences, fiber rolls, sand/gravel barriers, brush or rock filters, triangular silt dikes and other methods. During the wet season, 50 linear feet of silt fence (and the necessary stakes) per acre of disturbed area must be stockpiled on site.

Purpose: The purpose of perimeter protection is to reduce the amount of sediment transported beyond the disturbed areas of the construction site. Perimeter protection is primarily a backup means of sediment control. Most, if not all, sediment-laden water is to be treated in a sediment trap or pond. The only circumstances in which perimeter control is to be used as a primary means of sediment removal is when the catchment is very small (see below).

When to Install: Perimeter protection is to be installed prior to any upslope clearing and grading.

Measures to Use: The above measures may be used interchangeably and are not the only perimeter protection measures available. If surface water is collected by an interceptor dike or swale and routed to a sediment pond or trap, there may be no need for the perimeter protection measures specified in this section.

Criteria for Use as Primary Treatment: At the boundary of a site, perimeter protection may be used as the sole form of treatment when the flowpath meets the criteria listed below. If these criteria are not met, perimeter protection shall only be used as a backup to a sediment trap or pond.

Average Slope	Slope Percent	Flowpath Length
1.5H:1V or less	67% or less	100 feet
2H:1V or less	50% or less	115 feet
4H:1V or less	25% or less	150 feet
6H:1V or less	16.7% or less	200 feet
10H:1V or less	10% or less	250 feet

DRAFT

D.3.3.1 SILT FENCE

Code: SF Symbol: 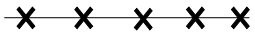

Purpose

Use of a silt fence reduces the transport of coarse sediment from a construction site by providing a temporary physical barrier to sediment and reducing the runoff velocities of overland flow.

Conditions of Use

1. Silt fence may be used downslope of all disturbed areas.
2. Silt fence is not intended to treat concentrated flows, nor is it intended to treat substantial amounts of overland flow. Any concentrated flows must be conveyed through the drainage system to a sediment trap or pond. The only circumstance in which overland flow may be treated solely by a silt fence, rather than by a sediment trap or pond, is when the area draining to the fence is small (see "Criteria for Use as Primary Treatment" on page D-30).

Design and Installation Specifications

1. See Figure D.3.3.A and Figure D.3.3.B for details.

2. The geotextile used must meet the standards listed below. A copy of the manufacturer's fabric specifications must be available on site.

AOS (ASTM D4751)	30-100 sieve size (0.60-0.15 mm) for slit film 50-100 sieve size (0.30-0.15 mm) for other fabrics
Water Permittivity (ASTM D4491)	0.02 sec^{-1} minimum
Grab Tensile Strength (ASTM D4632)	180 lbs. min. for extra strength fabric 100 lbs. min. for standard strength fabric
Grab Tensile Elongation (ASTM D4632)	30% max.
Ultraviolet Resistance (ASTM D4355)	70% min.

3. Standard strength fabric requires wire backing to increase the strength of the fence. Wire backing or closer post spacing may be required for extra strength fabric if field performance warrants a stronger fence.
4. Where the fence is installed, the slope shall be no steeper than 2H:1V.
5. If a typical silt fence (per Figure D.3.3.A) is used, the standard 4 x 4 trench may not be reduced as long as the bottom 8 inches of the silt fence is well buried and secured in a trench that stabilizes the fence and does not allow water to bypass or undermine the silt fence.

Maintenance Standards

1. Any damage shall be repaired immediately.
2. If concentrated flows are evident uphill of the fence, they must be intercepted and conveyed to a sediment trap or pond.
3. It is important to check the uphill side of the fence for signs of the fence clogging and acting as a barrier to flow and then causing channelization of flows parallel to the fence. If this occurs, replace the fence or remove the trapped sediment.
4. Sediment must be removed when the sediment is 6 inches high.
5. If the filter fabric (geotextile) has deteriorated due to ultraviolet breakdown, it shall be replaced.

DRAFT

FIGURE D.3.3.A SILT FENCE

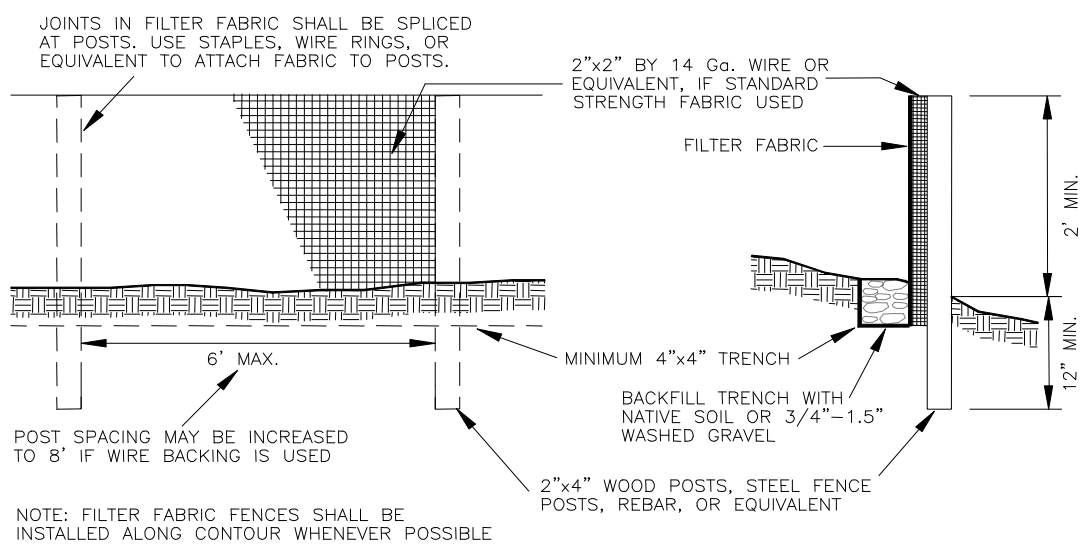

FIGURE D.3.3.B SILT FENCE INSTALLATION BY SLICING

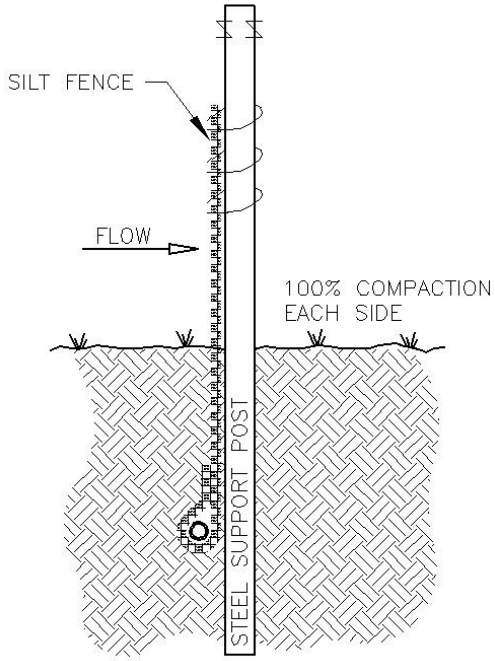

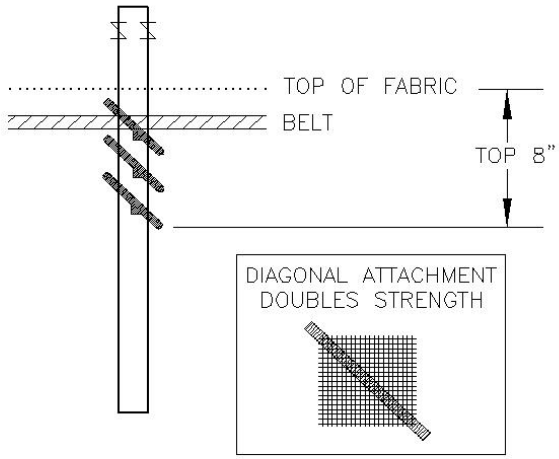

ATTACHMENT DETAILS:

1. GATHER FABRIC AT POSTS, IF NEEDED.
2. UTILIZE THREE TIES PER POST, ALL WITHIN TOP 8" OF FABRIC.
3. POSITION EACH TIE DIAGONALLY, PUNCTURING HOLES VERTICALLY A MINIMUM OF 1" APART.
4. HANG EACH TIE ON A POST NIPPLE AND TIGHTEN SECURELY. USE CABLE TIES (50 LBS) OF SOFT WIRE.

NOTES:

1. POST SPACING: 7' MAX. ON OPEN RUNS 4' MAX. ON POOLING AREAS.
2. POST DEPTH: AS MUCH BELOW GROUND AS FABRIC ABOVE GROUND.
3. PONDING HEIGHT MAX. 24" ATTACH FABRIC TO UPSTREAM SIDE OF POST.
4. DRIVE OVER EACH SIDE OF SILT FENCE 2 TO 4 TIMES WITH DEVICE EXERTING 60 P.S.I. OR GREATER.
5. NO MORE THAN 24" OF A 36" FABRIC IS ALLOWED ABOVE GROUND.
6. VIBRATORY PLOW IS NOT ACCEPTABLE BECAUSE OF HORIZONTAL COMPACTION.

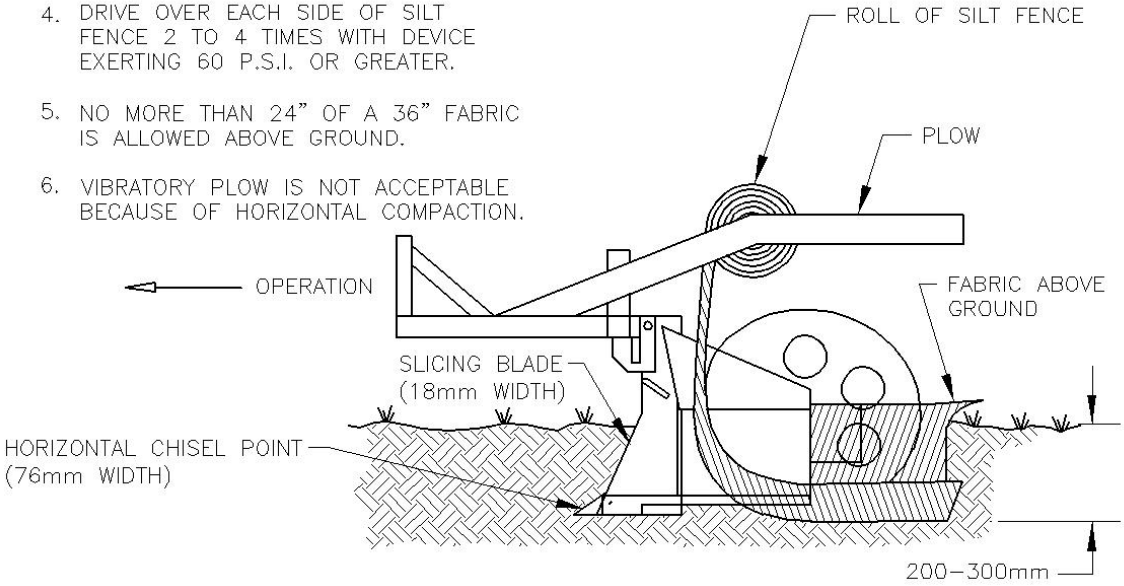

SILT FENCE INSTALLATION BY SLICING METHOD

D.3.3.2 BRUSH BARRIER

Code: BB Symbol:

Purpose

The purpose of brush barriers is to reduce the transport of coarse sediment from a construction site by providing a temporary physical barrier to sediment and reducing the runoff velocities of overland flow.

Conditions of Use

1. Brush barriers may be used downslope of all disturbed areas.
2. Brush barriers are not intended to treat concentrated flows, nor are they intended to treat substantial amounts of overland flow. Any concentrated flows must be conveyed through the drainage system to a sediment trap or pond. The only circumstance in which overland flow may be treated solely by a barrier, rather than by a sediment trap or pond, is when the area draining to the barrier is small (see "Criteria for Use as Primary Treatment" on page D-30).

Design and Installation Specifications

1. See Figure D.3.3.C for details.
2. King County may require filter fabric (geotextile) anchored over the brush berm to enhance the filtration ability of the barrier.

Maintenance Standards

1. There shall be no signs of erosion or concentrated runoff under or around the barrier. If concentrated flows are bypassing the barrier, it must be expanded or augmented by toed-in filter fabric.
2. The dimensions of the barrier must be maintained.

DRAFT

FIGURE D.3.3.C BRUSH BARRIER

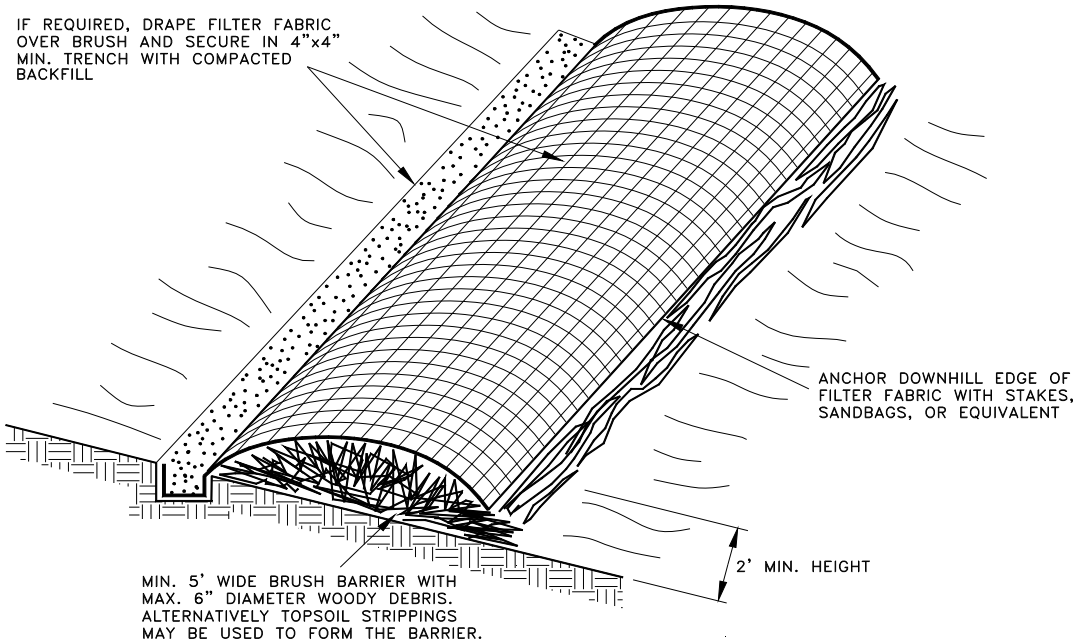

D.3.3.3 VEGETATED STRIP

Code: VS Symbol: 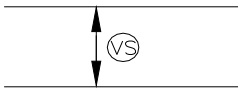

Purpose

Vegetated strips reduce the transport of coarse sediment from a construction site by providing a temporary physical barrier to sediment and reducing the runoff velocities of overland flow.

Conditions of Use

1. Vegetated strips may be used downslope of all disturbed areas.
2. Vegetated strips are not intended to treat concentrated flows, nor are they intended to treat substantial amounts of overland flow. Any concentrated flows must be conveyed through the drainage system to a sediment trap or pond. The only circumstance in which overland flow may be treated solely by a strip, rather than by a sediment trap or pond, is when the area draining to the strip is small (see "Criteria for Use as Primary Treatment" on page D-30).

Design and Installation Specifications

1. The vegetated strip shall consist of a 25-foot minimum width continuous strip of dense vegetation with a permeable topsoil. Grass-covered, landscaped areas are generally not adequate because the volume of sediment overwhelms the grass. Ideally, vegetated strips shall consist of undisturbed native growth with a well-developed soil that allows for infiltration of runoff.
2. The slope within the strip shall not exceed 4H:1V.
3. The uphill boundary of the vegetated strip shall be delineated with clearing limits as specified in Section D.3.1 (p. D-8).

DRAFT

Maintenance Standards

1. Any areas damaged by erosion or construction activity shall be seeded immediately and protected by mulch.
2. If more than 5 feet of the original vegetated strip width has had vegetation removed or is being eroded, sod must be installed using the standards for installation found in Section D.4.2.5.

If there are indications that concentrated flows are traveling across the buffer, surface water controls must be installed to reduce the flows entering the buffer, or additional perimeter protection must be installed.

D.3.3.4 TRIANGULAR SILT DIKE (GEOTEXTILE ENCASED CHECK DAM)

Code: TSD Symbol:

Purpose

Triangular silt dikes (TSDs) may be used as check dams, for perimeter protection, for temporary soil stockpile protection, for drop inlet protection, or as a temporary interceptor dike. Silt dikes, if attached to impervious surfaces with tack or other adhesive agent may also be used as temporary wheel wash areas, or concrete washout collection areas.

Conditions of Use

1. May be used for temporary check dams in ditches.

2. May be used on soil or pavement with adhesive or staples.
3. TSDs have been used to build temporary sediment ponds, diversion ditches, concrete washout facilities, curbing, water bars, level spreaders, and berms.

Design and Installation Specifications

1. TSDs must be made of urethane foam sewn into a woven geosynthetic fabric.
2. TSDs are triangular, 10 inches to 14 inches high in the center, with a 20-inch to 28-inch base. A 2-foot apron extends beyond both sides of the triangle along its standard section of 7 feet. A sleeve at one end allows attachment of additional sections as needed
3. Install TSDs with ends curved up to prevent water from flowing around the ends
4. Attach the TSDs and their fabric flaps to the ground with wire staples. Wire staples must be No. 11 gauge wire or stronger and shall be 200 mm to 300 mm in length.
5. When multiple units are installed, the sleeve of fabric at the end of the unit shall overlap the abutting unit and be stapled.
6. TSDs must be located and installed as soon as construction will allow.
7. TSDs must be placed perpendicular to the flow of water.
8. When used as check dams, the leading edge must be secured with rocks, sandbags, or a small key slot and staples.
9. When used in grass-lined ditches and swales, the TSD check dams and accumulated sediment shall be removed when the grass has matured sufficiently to protect the ditch or swale unless the slope of the swale is greater than 4 percent. The area beneath the TSD check dams shall be seeded and mulched immediately after dam removal.

DRAFT

Maintenance Standards

1. Triangular silt dikes shall be monitored for performance and sediment accumulation during and after each runoff producing rainfall event. Sediment shall be removed when it reaches one half the height of the silt dike.
2. Anticipate submergence and deposition above the triangular silt dike and erosion from high flows around the edges of the dike/dam. Immediately repair any damage or any undercutting of the dike/dam.

D.3.3.5 COMPOST BERMS

Code: COBE Symbol:

Purpose

Compost berms are an option to meet the requirements of perimeter protection. Compost berms may reduce the transport of sediment from a construction site by providing a temporary physical barrier to sediment and reducing the runoff velocities of overland flow. Compost berms trap sediment by filtering water passing through the berm and allowing water to pond, creating a settling area for solids behind the berm. Organic materials in the compost can also reduce concentrations of metals and petroleum hydrocarbons from construction runoff. Due to the increase in phosphorous seen in the effluent data from compost berms, they should be used with some cautions in areas that drain to phosphorus sensitive water bodies, and should only be used in Sensitive Lake watersheds, such as Lake Sammamish, with the approval from the County or the local jurisdiction.

Conditions of Use

1. Compost berms may be used in most areas requiring sediment or erosion control where runoff is in the form of sheet flow or in areas where silt fence is normally considered acceptable. Compost berms may be used in areas where migration of aquatic life such as turtles and salamanders are impeded by the use of silt fence.
2. Compost berms are not intended to treat concentrated flows, nor are they intended to treat substantial amounts of overland flow. Any concentrated flows must be conveyed via a drainage system to a sediment pond or trap.
3. For purposes of long-term sediment control objectives, berms may be seeded at the time of installation to create an additional vegetated filtering component.

Design and Installation Specifications

1. Compost berms shall be applied using a pneumatic blower device or equivalent, to produce a uniform cross-section and berm density.
2. Compost berms shall be triangular in cross-section. The ratio of base to height dimensions shall be 2:1.
3. The minimum size of a compost berm is a 2-foot base with a 1-foot height.
4. Compost berms shall be sized and spaced as indicated in the table below.

SLOPE	SLOPE	Maximum Slope Length or Berm Spacing (linear feet)	Berm Size Required (height x base width)
0% - 2%	Flatter than 50:1	250	1 ft x 2 ft
2% - 10%	50:1 – 10:1	125	1 ft x 2 ft
10% - 20%	10:1 – 5:1	100	1 ft x 2 ft
20% - 33%	5:1 – 3:1	75	1 ft x 2 ft
33% - 50%	3:1 – 2:1	50	1.5 ft x 3 ft

DRAFT

5. Compost berms shall not be used on slopes greater than 2H:1V
6. Compost shall meet criteria in WAC 173-350-220 (10) for Designation of Composted Materials
7. Compost shall be obtained from a supplier meeting the requirements of WAC 173-350-220.
8. Compost particle size distribution shall be as follows: 99% passing a 1 inch sieve, 90% passing a ¾ inch sieve and a minimum of 70% greater than the 3/8 inch sieve. A total of 98% shall not exceed 3 inches in length.
9. Berms shall be placed on level contours to assist in dissipating flow into sheet flow rather than concentrated flows. Berms shall not be constructed to concentrate runoff or channel water. Sheet flow of water shall be perpendicular to the berm at impact. No concentrated flow shall be directed towards compost berms.
10. Where possible, berms shall be placed 5 feet or more from the toe of slopes to allow space for sediment deposition and collection.
11. In order to prevent water from flowing around the ends of the berms, the ends of the berm shall be constructed pointing upslope so the ends are at a higher elevation than the rest of the berm.
12. A compost blanket extending 10 – 15 feet above the berm is recommended where the surface above the berm is rutted or uneven, to reduce concentrated flow and promote sheet flow into the berm.

Maintenance Standards

1. Compost berms shall be regularly inspected to make sure they retain their shape and allow adequate flow-through of stormwater.
2. When construction is completed on site, the berms shall be dispersed for incorporation into the soil or left on top of the site for final seeding to occur.
3. Any damage to berms must be repaired immediately. Damage includes flattening, compacting, rills, eroded areas due to overtopping.
4. If concentrated flows are evident uphill of the berm, the flows must be intercepted and conveyed to a sediment trap or pond.
5. The uphill side of the berm shall be inspected for signs of the berm clogging and acting as a barrier to flows and causing channelization of flows parallel to the berm. If this occurs, replace the berm or remove the trapped sediment.
6. Sediment that collects behind the berm must be removed when the sediment is more than 6 inches deep.

D.3.3.6 COMPOST SOCKS

Code: COSO Symbol:

Purpose

Compost socks reduce the transport of sediment from a construction site by providing a temporary physical barrier to sediment-laden water and reducing the runoff velocities of overland flow. Compost socks trap sediment by filtering water that passes through the sock and allows water to pond behind the sock, creating a settling area for solids. Organic materials in the compost also may reduce metal and petroleum hydrocarbon concentrations in construction runoff. Compost socks function similarly to compost berms; however, because the compost is contained in a mesh tube, they are appropriate for both concentrated flow and sheet flow. Compost socks may be used to channel concentrated flow on hard surfaces.

DRAFT

Conditions of Use

1. Compost socks may be used in areas requiring sediment or erosion control where runoff is in the form of sheet flow or in areas that silt fence is normally considered acceptable. Compost socks may also be used in sensitive environmental areas where migration of aquatic life, including turtles, salamanders and other aquatic life may be impeded by the used of silt fence.
2. Compost socks are not intended to treat substantial amounts of overland flow. However, compost socks may be subjected to some ponding and concentrated flows. If intended primarily as a filtration device, the socks should be sized and placed so that flows do not overtop the socks.
3. For purposes of long term sediment control objectives, compost socks may be seeded at the time of installation to create an additional vegetated filtering component.

Design and Installation Specifications

1. Compost socks shall be produced using a pneumatic blower hose or equivalent to fill a mesh tube with compost to create a uniform cross-section and berm density.
2. Socks shall be filled so they are firmly – packed yet flexible. Upon initial filling, the socks shall be filled to have a round cross-section. Once placed on the ground, it is recommended to apply weight to the sock to improve contact with the underlying surface. This may cause the sock to assume an oval shape.

3. Compost socks shall be a minimum of 8 inches in diameter. Larger diameter socks are recommended for areas where ponding is expected behind the sock.
4. Compost socks shall not be used on slopes greater than 2H:1V.
5. Compost shall meet criteria in WAC 173-350-220 (10) for Designation of Composted Materials.
6. Compost shall be obtained from a supplier meeting the requirements of WAC 173-350-220.
7. Compost particle size distribution shall be as follows: 99% passing a 1 inch sieve, 90% passing a ¾ inch sieve and a minimum of 70% greater than the 3/8 inch sieve. A total of 98% shall not exceed 3 inches in length.
8. In order to prevent water from flowing around the ends of compost socks, the ends must be pointed upslope so the ends of the socks are at a higher elevation than the remainder of the sock.

Maintenance Standards

1. Compost socks shall be regularly inspected to make sure the mesh tube remains undamaged, the socks retain their shape, and allow adequate flow through of surface water. If the mesh tube is torn, it shall be repaired using twine, zip-ties, or wire. Large sections of damaged socks must be replaced. Any damage must be repaired immediately upon discovery of damage.
2. When the sock is no longer needed, the socks shall be cut open and the compost dispersed to be incorporated into the soil or left on top of the soil for final seeding to occur. The mesh material must be disposed of properly as solid waste. If spills of oil, antifreeze, hydraulic fluid, or other equipment fluids have occurred that have saturated the sock, the compost must be disposed of properly as a waste.
3. Sediment must be removed when sediment accumulations are within 3 inches of the top of the sock.

DRAFT

D.3.4 TRAFFIC AREA STABILIZATION

Unsurfaced entrances, roads, and parking areas used by construction traffic shall be stabilized to minimize erosion and tracking of sediment off site. Stabilized construction entrances shall be installed as the first step in clearing and grading. At the County's discretion, road and parking area stabilization is not required during the dry season (unless dust is a concern) or if the site is underlain by coarse-grained soils. Roads and parking areas shall be stabilized immediately after initial grading.

Purpose: The purpose of traffic area stabilization is to reduce the amount of sediment transported off site by construction vehicles and to reduce the erosion of areas disturbed by vehicle traffic. Sediment transported off site onto paved streets is a significant problem because it is difficult to effectively remove, and any sediment not removed ends up in the drainage system. Additionally, sediment on public right-of-way can pose a serious traffic hazard. Construction road and parking area stabilization is important because the combination of wet soil and heavy equipment traffic typically forms a slurry of easily erodible mud. Finally, stabilization also is an excellent form of dust control in the summer months.

When to Install: The construction entrance is to be installed as the first step in clearing and grading. Construction road stabilization shall occur immediately after initial grading of the construction roads and parking areas.

Measures to Use: There are two types of traffic area stabilization: (1) a stabilized construction entrance and (2) construction road/parking area stabilization. Both measures must be used as specified under "Conditions of Use" for each measure.

D.3.4.1 STABILIZED CONSTRUCTION ENTRANCE

Code: CE Symbol: 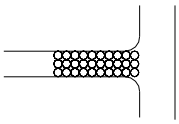

Purpose

Construction entrances are stabilized to reduce the amount of sediment transported onto paved roads by motor vehicles or runoff by constructing a stabilized pad of quarry spalls at entrances to construction sites.

Conditions of Use

Construction entrances shall be stabilized wherever traffic will be leaving a construction site and traveling on paved roads or other paved areas within 1,000 feet of the site. Access and exits shall be limited to one route if possible, or two for linear projects such as roadway where more than one access/exit is necessary for maneuvering large equipment.

Design and Installation Specifications

1. See Figure D.3.4.A for details.
2. A separation geotextile shall be placed under the spalls to prevent fine sediment from pumping up into the rock pad. The geotextile shall meet the following standards:

Grab Tensile Strength (ASTM D4751)	200 psi min.
Grab Tensile Elongation (ASTM D4632)	30% max.
Mullen Burst Strength (ASTM D3786-80a)	400 psi min.
AOS (ASTM D4751)	20-45 (U.S. standard sieve size)

3. Hog fuel (wood based mulch) may be substituted for or combined with quarry spalls in areas that will not be used for permanent roads. The effectiveness of hog fuel is highly variable, but it has been used successfully on many sites. It generally requires more maintenance than quarry spalls. Hog fuel is not recommended for entrance stabilization in urban areas. The inspector may at any time require the use of quarry spalls if the hog fuel is not preventing sediment from being tracked onto pavement or if the hog fuel is being carried onto pavement. Hog fuel is prohibited in permanent roadbeds because organics in the subgrade soils cause difficulties with compaction.
4. Fencing (see Section D.3.1) shall be installed as necessary to restrict traffic to the construction entrance.
5. Whenever possible, the entrance shall be constructed on a firm, compacted subgrade. This can substantially increase the effectiveness of the pad and reduce the need for maintenance.

Maintenance Standards

1. Quarry spalls (or hog fuel) shall be added if the pad is no longer in accordance with the specifications.
2. If the entrance is not preventing sediment from being tracked onto pavement, then alternative measures to keep the streets free of sediment shall be used. This may include street sweeping, an increase in the dimensions of the entrance, or the installation of a wheel wash. If washing is used, it shall be done on an area covered with crushed rock, and wash water shall drain to a sediment trap or pond.

DRAFT

3. Any sediment that is tracked onto pavement shall be removed immediately by sweeping. The sediment collected by sweeping shall be removed or stabilized on site. The pavement shall not be cleaned by washing down the street, except when sweeping is ineffective and there is a threat to public safety. If it is necessary to wash the streets, a small sump must be constructed. The sediment would then be washed into the sump where it can be controlled ~~and discharged appropriately.~~ Wash water must be pumped back onto the ***site*** and can not discharge to systems tributary to surface waters.
4. Any quarry spalls that are loosened from the pad and end up on the roadway shall be removed immediately.
5. If vehicles are entering or exiting the site at points other than the construction entrance(s), fencing (see Section D.3.1) shall be installed to control traffic.

FIGURE D.3.4.A STABILIZED CONSTRUCTION ENTRANCE

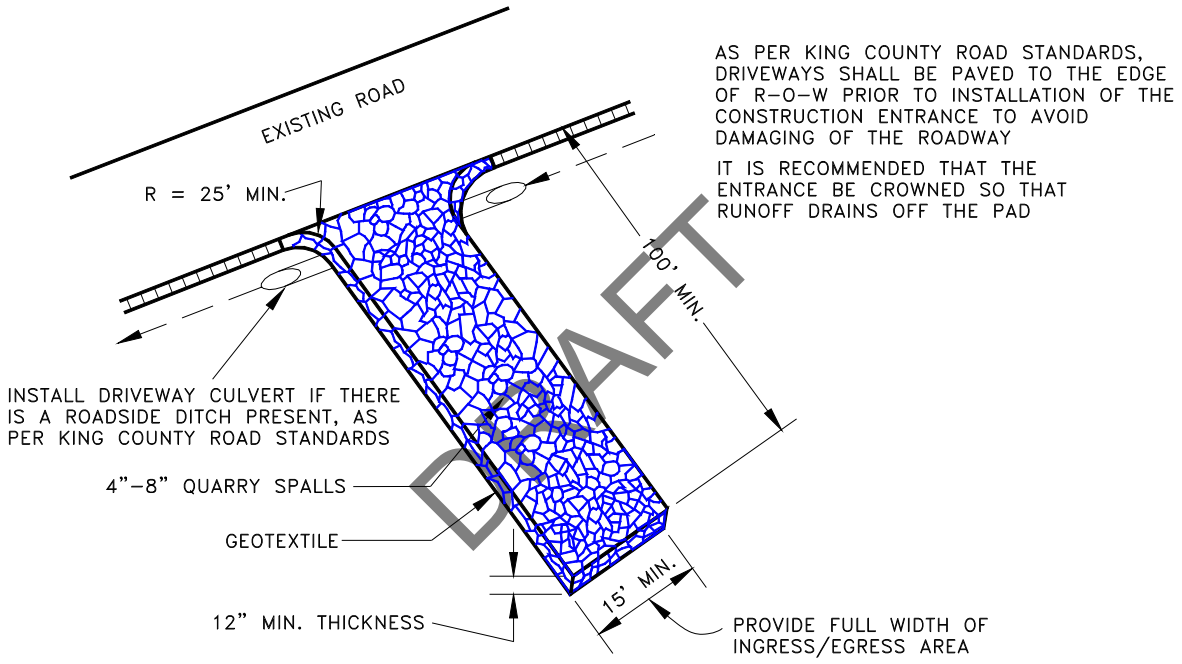

D.3.4.2 CONSTRUCTION ROAD/PARKING AREA STABILIZATION

Code: CRS Symbol: 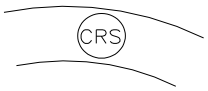

Purpose

Stabilizing subdivision roads, parking areas, and other onsite vehicle transportation routes immediately after grading reduces erosion caused by construction traffic or runoff.

Conditions of Use

1. Roads or parking areas shall be stabilized wherever they are constructed, whether permanent or temporary, for use by construction traffic.
2. Fencing (see Section D.3.1) shall be installed, if necessary, to limit the access of vehicles to only those roads and parking areas that are stabilized.

Design and Installation Specifications

1. A 6-inch depth of 2- to 4-inch **crushed rock, gravel base, or crushed surfacing base course** shall be applied immediately after grading or utility installation. A 4-inch course of asphalt treated base (ATB) may also be used, or the road/parking area may be paved. It may also be possible to use cement or calcium chloride for soil stabilization. If the area will not be used for permanent roads, parking areas, or structures, a 6-inch depth of hog fuel may also be used, but this is likely to require more maintenance. Whenever possible, construction roads and parking areas shall be placed on a firm, compacted subgrade. *Note: If the area will be used for permanent road or parking installation later in the project, the subgrade will be subject to inspection.*
2. **Temporary road gradients** shall not exceed 15 percent. Roadways shall be carefully graded to drain transversely. Drainage ditches shall be provided on each side of the roadway in the case of a crowned section, or on one side in the case of a super-elevated section. Drainage ditches shall be designed in accordance with the standards given in Section D.3.6.3 (p. D-60) and directed to a sediment pond or trap.
3. Rather than relying on ditches, it may also be possible to **grade the road** so that runoff sheet-flows into a heavily vegetated area with a well-developed topsoil. Landscaped areas are not adequate. If this area has at least 50 feet of vegetation, then it is generally preferable to use the vegetation to treat runoff, rather than a sediment pond or trap. The 50 feet shall not include vegetated wetlands. If runoff is allowed to sheet flow through adjacent vegetated areas, it is vital to design the roadways and parking areas so that no concentrated runoff is created.
4. In order to control construction traffic, the County may require that **signs** be erected on site informing construction personnel that vehicles, other than those performing clearing and grading, are restricted to stabilized areas.
5. If construction roads do not adequately reduce trackout to adjacent property or roadways, a wheel wash system will be required.

Maintenance Standards

Crushed rock, gravel base, hog fuel, etc. shall be added as required to maintain a stable driving surface and to stabilize any areas that have eroded.

DRAFT

D.3.4.3 WHEEL WASH

Code: WW Symbol:

Purpose

Wheel wash systems reduce the amount of sediment transported onto paved roadways and into surface water systems by construction vehicles.

Conditions of Use

When a stabilized construction entrance is not preventing sediment from being tracked onto pavement:

- Wheel washing is generally an effective erosion and sediment control method and BMP when installed with careful attention to topography. For example, a wheel wash can be detrimental if installed at the top of a slope abutting a right-of-way where the water from the dripping truck wheels and undercarriage can run unimpeded into the street.
- Pressure washing combined with an adequately sized and properly surfaced wash pad with direct drainage discharge to a large 10 foot x 10-foot sump can be very effective.

Design and Installation Specifications

A suggested detail is shown in Figure D.3.4.B.

1. A minimum of 6inches of asphalt treated base (ATB) over crushed base material or 8 inches over a good subgrade is recommended to pave the wheel wash area.
2. Use a low clearance truck to test the wheel wash before paving. Either a belly dump or lowboy will work well to test clearance.
3. Keep the water level from 12 to 14 inches deep to avoid damage to truck hubs and filling the truck tongues with water.
4. Midpoint spray nozzles are only needed in very muddy conditions.
5. Wheel wash systems should be designed with a small grade change, 6 to 12 inches for a 10-foot wide pond, to allow sediment to flow to the low side of the pond and to help prevent re-suspension of sediment.
6. A drainpipe with a 2 to 3 foot riser should be installed on the low side of the wheel wash pond to allow for easy cleaning and refilling. Polymers may be used to promote coagulation and flocculation in a closed-loop system.
7. Polyacrylamide (PAM) added to the wheel washwater at a rate of 0.25 – 0.5 pounds per 1,000 gallons of water increases effectiveness and reduces cleanup time. If PAM is already being used for dust or erosion control and is being applied by a water truck, the same truck may be used to change the washwater.

DRAFT

Maintenance Standards

1. The wheel wash should start out each day with clean, fresh water.
2. The washwater should be changed a minimum of once per day. On large earthwork jobs where more than 10-20 trucks per hour are expected, the washwater will need to be changed more often.
3. Wheel wash or tire bath wastewater shall be discharged to a separate on-site treatment system, such as a closed-loop recirculation system or land application, or to the sanitary sewer system with proper local sewer district approval or permits.

FIGURE D.3.4.B WHEEL WASH AND PAVED CONSTRUCTION ENTRANCE

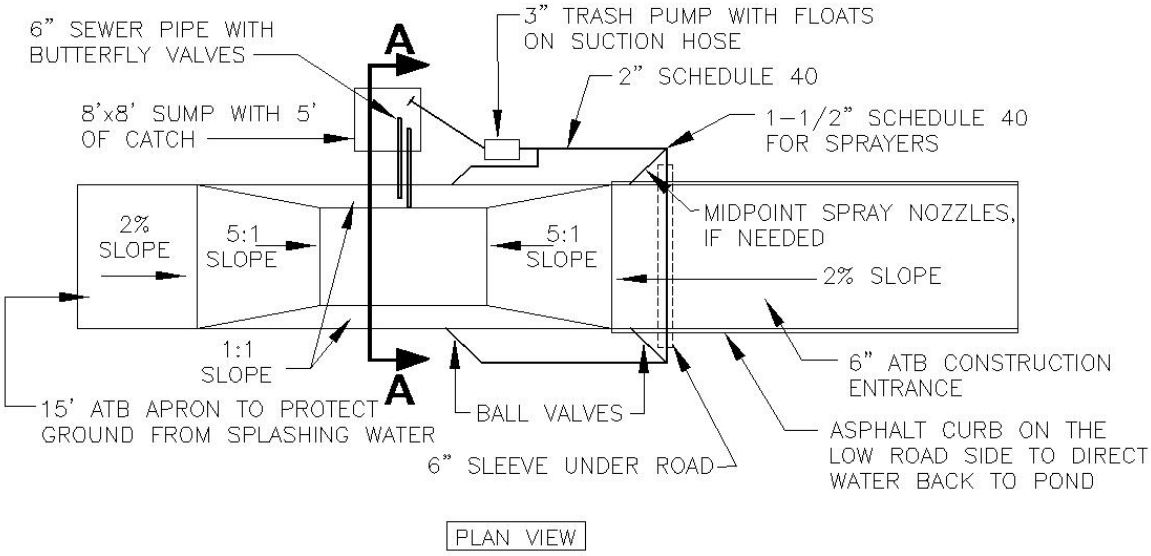

PLAN VIEW

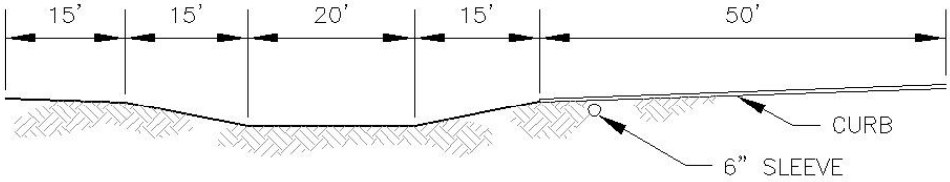

ELEVATION VIEW

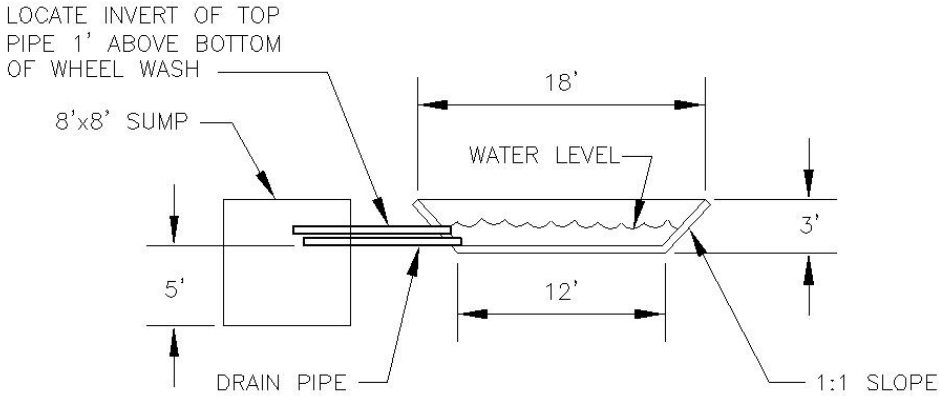

SECTION A–A

NOTES:

1. BUILD 8'x8' SUMP TO ACCOMODATE CLEANING BY TRACKHOE.

WHEEL WASH

D.3.5 SEDIMENT RETENTION

Surface water collected from disturbed areas of the site shall be routed through a sediment pond or trap prior to release from the site. An exception is for areas at the perimeter of the site with drainage areas small enough to be treated solely with perimeter protection (see Section D.3.3, p. D-30). Also, if the soils and topography are such that no offsite discharge of surface water is anticipated up to and including the developed 2-year runoff event, sediment ponds and traps are not required. A 10-year~~/15-minute~~ peak flow using KCRTS with 15-minute time steps shall be used for sediment pond/trap sizing if the project size, expected timing and duration of construction, or downstream conditions warrant a higher level of protection (see below). At the County's discretion, sites may be worked during the dry season without sediment ponds and traps if there is some other form of protection of surface waters, such as a 100-foot forested buffer between the disturbed areas and adjacent surface waters. For small sites, use the criteria defined in Section D.3.3, Perimeter Protection to determine minimum flow path length. If the site work has to be extended into the wet season, a back-up plan must be identified in the CSWPPP and implemented. Protection of catch basins is required for inlets that are likely to be impacted by sediment generated by the project and that do not drain to an onsite sediment pond or trap. Sediment retention facilities shall be installed prior to grading of any contributing area and shall be located so as to avoid interference with the movement of juvenile salmonids attempting to enter off-channel areas or drainages.

Purpose: The purpose of sediment retention facilities is to remove sediment from runoff generated from disturbed areas.

When to Install: The facilities shall be constructed as the first step in the clearing and grading of the site. The surface water conveyances may then be connected to the facilities as site development proceeds.

Measures to Use: There are three sediment retention measures in this section. The first two, sediment traps and ponds, serve the same function but for different size catchments. All runoff from disturbed areas must be routed through a trap or pond except for very small areas as specified in Section D.4.3. The third measure is for catch basin protection. It is only to be used in limited circumstances and is not a primary sediment treatment facility. It is only intended as a backup in the event of failure of other onsite systems.

DRAFT

Use of Permanent Drainage Facilities: All projects that are constructing permanent facilities for runoff quantity control are strongly encouraged to use the rough-graded or final-graded permanent facilities for ponds and traps. This includes combined facilities and infiltration facilities. When permanent facilities are used as temporary sedimentation facilities, the surface area requirements of sediment traps (for drainages less than 3 acres) or sediment ponds (more than 3 acres) must be met. If the surface area requirements are larger than the surface area of the permanent facility, then the pond shall be enlarged to comply with the surface area requirement. The permanent pond shall also be divided into two cells as required for sediment ponds. Either a permanent control structure or the temporary control structure described in Section D.3.5.2 may be used. If a permanent control structure is used, it may be advisable to partially restrict the lower orifice with gravel to increase residence time while still allowing dewatering of the pond.

If infiltration facilities are to be used, the sides and bottom of the facility must only be rough excavated to a minimum of three feet above final grade. Excavation should be done with a backhoe working at "arms length" to minimize disturbance and compaction of the infiltration surface. Additionally, any required pretreatment facilities shall be fully constructed prior to any release of sediment-laden water to the facility. Pretreatment and shallow excavation are intended to prevent the clogging of soil with fines. Final grading of the infiltration facility shall occur only when all contributing drainage areas are fully stabilized (see Section D.5.5, p. D-76).

Selection of the Design Storm: In most circumstances, the developed condition 2-year peak flow using KCRTS with 15-minute time steps~~peak flow from the developed 2-year runoff event~~ is sufficient for calculating surface area for ponds and traps and for determining exemptions from the sediment retention and surface water collection requirements (Sections D.3.5 and D.3.6, respectively). In some

circumstances, however, the 10-year~~/~~ KCRTS 15-minute peak flow should be used. Examples of such circumstances include the following:

- Sites that are within ¼ mile of salmonid streams, wetlands, and designated sensitive lakes such as Lake Sammamish
- Sites where significant clearing and grading is likely to occur during the wet season
- Sites with downstream erosion or sedimentation problems.

Natural Vegetation: Whenever possible, sediment-laden water shall be discharged into onsite, relatively level, vegetated areas. This is the only way to effectively remove fine particles from runoff. This can be particularly useful after initial treatment in a sediment retention facility. The areas of release must be evaluated on a site-by-site basis in order to determine appropriate locations for and methods of releasing runoff. Vegetated wetlands shall not be used for this purpose. Frequently, it may be possible to pump water from the collection point at the downhill end of the site to an upslope vegetated area. Pumping shall only augment the treatment system, not replace it because of the possibility of pump failure or runoff volume in excess of pump capacity.

D.3.5.1 SEDIMENT TRAP

Code: ST Symbol: 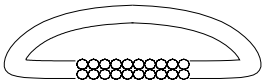

DRAFT

Purpose

Sediment traps remove sediment from runoff originating from disturbed areas of the site. Sediment traps are typically designed to only remove sediment as small as medium silt (0.02 mm). As a consequence, they usually only result in a small reduction in turbidity.

Conditions of Use

A sediment trap shall be used where the contributing drainage area is 3 acres or less.

Design and Installation Specifications

1. See Figure D.3.5.A for details.
2. If permanent runoff control facilities are part of the project, they should be used for sediment retention (see "Use of Permanent Drainage Facilities" on page D-44).
3. To determine the trap geometry, first calculate the design surface area (*SA*) of the trap, measured at the invert of the weir. Use the following equation:

$$SA = FS(Q_2/V_S)$$

where Q_2 = Design inflow (cfs) from the contributing drainage area based on the developed condition 2-year peak discharge using KCRTS with 15-minute time steps~~peak discharge from the developed 2-year runoff event from the contributing drainage area~~ as computed in the hydrologic analysis. The 10-year~~/~~ KCRTS 15-minute peak flow shall be used if the project size, expected timing and duration of construction, or downstream conditions warrant a higher level of protection. If no hydrologic analysis is required, the Rational Method may be used (Section 3.2.1 of the *Surface Water Design Manual*).

V_S = The settling velocity (ft/sec) of the soil particle of interest. The 0.02 mm (medium silt) particle with an assumed density of 2.65 g/cm^3 has been selected as the particle of interest and has a settling velocity (V_S) of 0.00096 ft/sec.

FS = A safety factor of 2 to account for non-ideal settling.

Therefore, the equation for computing surface area becomes:

$$SA = 2 \times Q_2/0.00096 \quad \text{or} \quad 2080 \text{ square feet per cfs of inflow}$$

Note: Even if permanent facilities are used, they must still have a surface area that is at least as large as that derived from the above formula. If they do not, the pond must be enlarged.

4. To aid in determining sediment depth, all traps shall have a staff gage with a prominent mark one foot above the bottom of the trap.

Maintenance Standards

1. Sediment shall be removed from the trap when it reaches 1 foot in depth.
2. Any damage to the trap embankments or slopes shall be repaired.

FIGURE D.3.5.A SEDIMENT TRAP

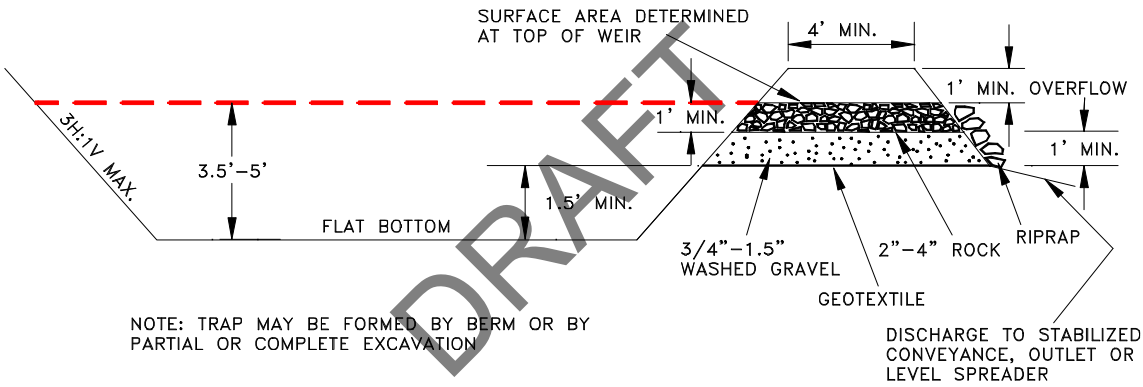

CROSS-SECTION

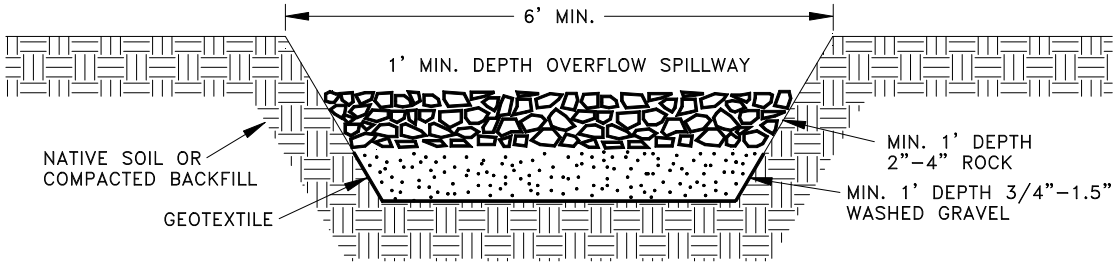

TRAP OUTLET

D.3.5.2 SEDIMENT POND

Code: SP Symbol: 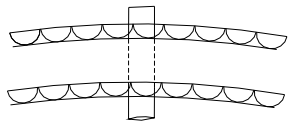

Purpose

Sediment ponds remove sediment from runoff originating from disturbed areas of the site. Sediment ponds are typically designed to only remove sediment as small as medium silt (0.02 mm). As a consequence, they usually reduce turbidity only slightly.

Conditions of Use

A sediment pond shall be used where the contributing drainage area is 3 acres or more.

Design and Installation Specifications

1. See Figure D.3.5.B, Figure D.3.5.C, and Figure D.3.5.D for details.
2. If permanent runoff control facilities are part of the project, they should be used for sediment retention (see "Use of Permanent Drainage Facilities" on page D-44).

Determining Pond Geometry

1. Obtain the discharge from the hydrologic calculations ~~of~~ for the 2-year peak flow using KCRTS with 15-minute time steps~~peak flow for the 2-year runoff event~~ (Q_2). The 10-year~~/~~ KCRTS 15-minute peak flow shall be used if the project size, expected timing and duration of construction, or downstream conditions warrant a higher level of protection. If no hydrologic analysis is required, the Rational Method may be used (Section 3.2.1 of the *Surface Water Design Manual*).
2. Determine the required surface area at the top of the riser pipe with the equation:

$$SA = 2 \times Q_2/0.00096 \quad \text{or} \quad 2080 \text{ square feet per cfs of inflow}$$

   See Section D.3.5.1 (p. D-45) for more information on the derivation of the surface area calculation.
3. The basic geometry of the pond can now be determined using the following design criteria:
   - Required surface area *SA* (from Step 2 above) at top of riser
   - Minimum 3.5-foot depth from top of riser to bottom of pond
   - Maximum 3:1 interior side slopes and maximum 2:1 exterior slopes. The interior slopes may be increased to a maximum of 2:1 if fencing is provided at or above the maximum water surface
   - One foot of freeboard between the top of the riser and the crest of the emergency spillway
   - Flat bottom
   - Minimum one foot deep spillway
   - Length-to-width ratio between 3:1 and 6:1.

Sizing of Discharge Mechanisms

Principal Spillway: Determine the required diameter for the principal spillway (riser pipe). The diameter shall be the minimum necessary to pass the developed condition 10-year peak flow using KCRTS with 15-minute time steps~~peak flow from the developed 10-year runoff event~~ (Q_{10}). Use Figure 5.3.4.H (*SWDM*

DRAFT

Chapter 5) to determine this diameter (h = one foot). *Note: A permanent control structure may be used instead of a temporary riser.*

Emergency Overflow Spillway: Determine the required size and design of the emergency overflow spillway for the developed condition 100-year/ KCRTS 15-minute peak flow using the procedure in Section 5.3.1 ("Emergency Overflow Spillway" subsection) of the *Surface Water Design Manual*.

Dewatering Orifice: Determine the size of the dewatering orifice(s) (minimum 1-inch diameter) using a modified version of the discharge equation for a vertical orifice and a basic equation for the area of a circular orifice.

1. Determine the required area of the orifice with the following equation:

$$A_o = \frac{A_s (2h)^{0.5}}{0.6\text{x}3600Tg^{0.5}} = 4.81(10^{-6})A_s\sqrt{h}$$

where A_O = orifice area (square feet)
A_S = pond surface area (square feet)
h = head of water above orifice (height of riser in feet)
T = dewatering time (24 hours)
g = acceleration of gravity (32.2 feet/second^2)

2. Convert the required surface area to the required diameter D (inches) of the orifice:

$$D = 24\text{x}\sqrt{\frac{A_o}{\pi}} = 13.54\text{x}\sqrt{A_o}$$

3. The vertical, perforated tubing connected to the dewatering orifice must be at least 2 inches larger in diameter than the orifice to improve flow characteristics. The size and number of perforations in the tubing should be large enough so that the tubing does not restrict flow. The flow rate should be controlled by the orifice.

DRAFT

Additional Design Specifications

- The **pond shall be divided** into two roughly equal volume cells by a permeable divider that will reduce turbulence while allowing movement of water between cells. The divider shall be at least one-half the height of the riser and a minimum of one foot below the top of the riser. Wire-backed, 2- to 3-foot high, extra strength filter fabric (see Section D.3.3.1) supported by treated 4"x4"s may be used as a divider. Alternatively, staked straw bales wrapped with filter fabric (geotextile) may be used.

  If the pond is more than 6 feet deep, a different mechanism must be proposed. A riprap embankment is one acceptable method of separation for deeper ponds. Other designs that satisfy the intent of this provision are allowed as long as the divider is permeable, structurally sound, and designed to prevent erosion under or around the barrier.

- To aid in determining sediment depth, **one-foot intervals** shall be prominently marked on the riser.
- If an **embankment** of more than 6 feet is proposed, the pond must comply with the criteria under "Embankments" in Section 5.3.1 of the *Surface Water Design Manual*.

Maintenance Standards

1. Sediment shall be removed from the pond when it reaches 1 foot in depth.
2. Any damage to the pond embankments or slopes shall be repaired.

FIGURE D.3.5.B SEDIMENT POND PLAN VIEW

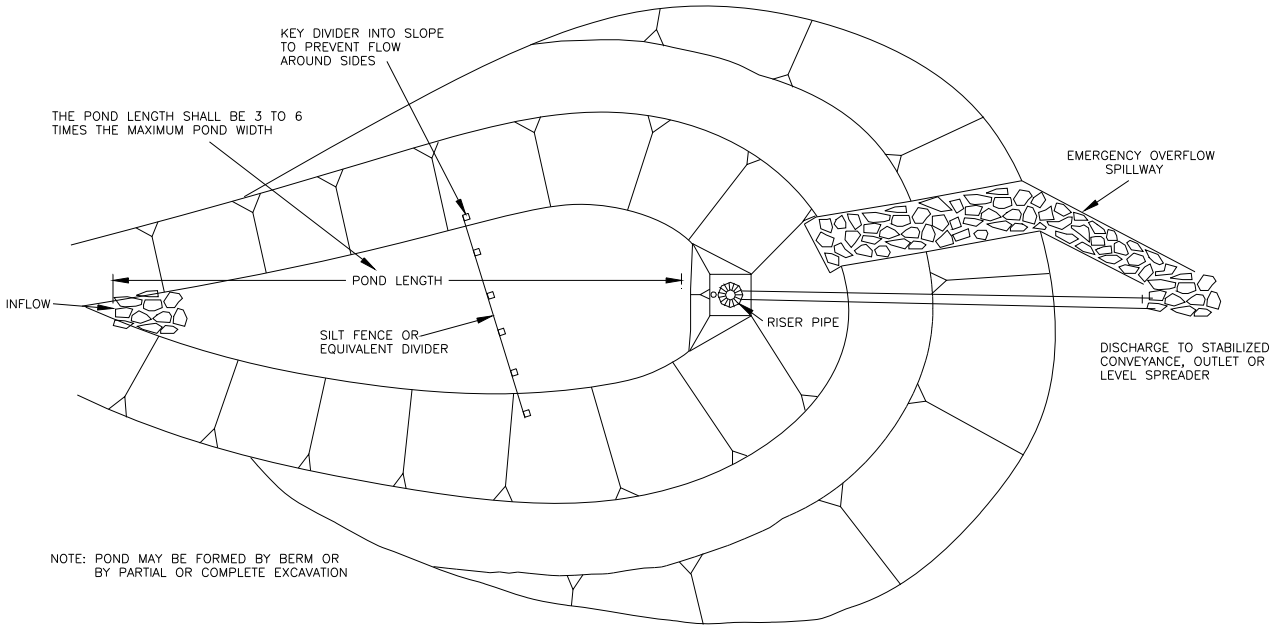

FIGURE D.3.5.C SEDIMENT POND CROSS SECTION

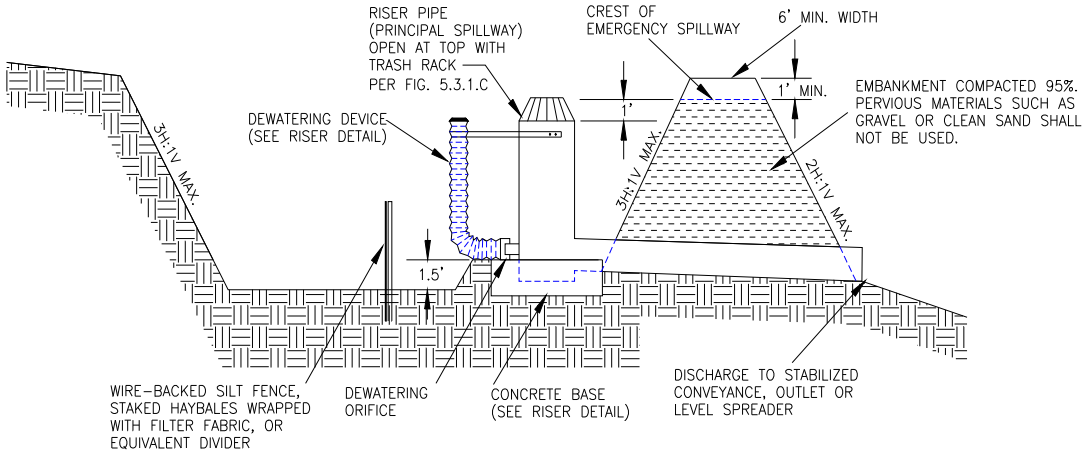

FIGURE D.3.5.D SEDIMENT POND RISER DETAIL

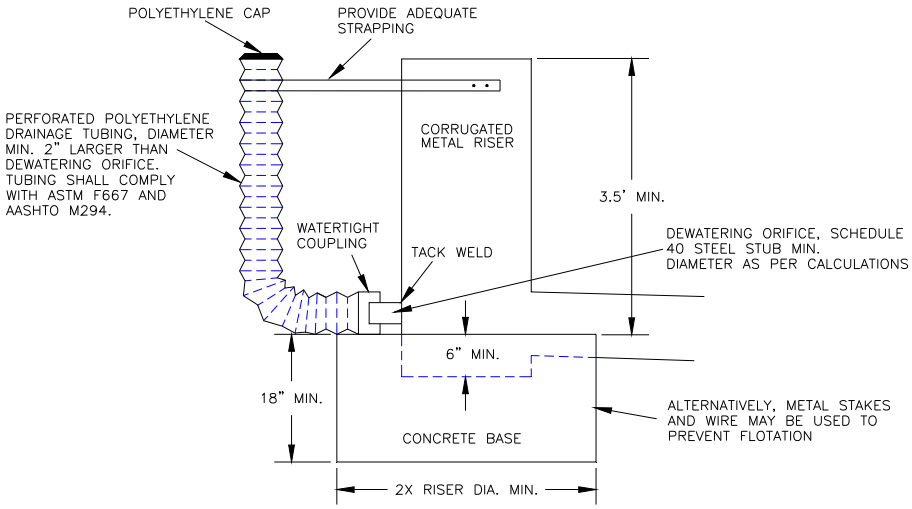

DRAFT

D.3.5.3 STORM DRAIN INLET PROTECTION

Code: FFP or CBI or CBP Symbol: or or

Purpose

Storm drain inlets are protected to prevent coarse sediment from entering storm drainage systems. Temporary devices around storm drains assist in improving the quality of water discharged to inlets or catch basins by ponding sediment-laden water. These devices are effective only for relatively small drainage areas.

Conditions of Use

1. Protection shall be provided for all storm drain inlets downslope and within 500 feet of a disturbed or construction area, unless the runoff that enters the catch basin will be conveyed to a sediment pond or trap.
2. Inlet protection may be used anywhere at the applicant's discretion to protect the drainage system. This will, however, require more maintenance, and it is highly likely that the drainage system will still require some cleaning.
3. The contributing drainage area must not be larger than one acre.

Design and Installation Specifications

DRAFT

1. There are many options **for protecting storm drain inlets**. Two commonly used options are filter fabric protection and catch basin inserts. *Filter fabric protection* (see Figure D.3.5.E) is filter fabric (geotextile) placed *over* the grate. This method is generally very ineffective and requires intense maintenance efforts. *Catch basin inserts* (see Figure D.3.5.F) are manufactured devices that nest inside a catch basin. This method also requires a high frequency of maintenance to be effective. Both options provide adequate protection, but filter fabric is likely to result in ponding of water above the catch basin, while the insert will not. Thus, filter fabric is only allowed where ponding will not be a traffic concern and where slope erosion will not result if the curb is overtopped by ponded water.

   Trapping sediment in the catch basins is unlikely to improve the water quality of runoff if it is treated in a pond or trap because the coarse particles that are trapped at the catch basin settle out very quickly in the pond or trap. **Catch basin protection normally only improves water quality where there is no treatment facility downstream**. In these circumstances, catch basin protection is an important last line of defense. It is not, however, a substitute for preventing erosion.

   The placement of filter fabric *under* grates is generally prohibited and the use of filter fabric over grates is strictly limited and discouraged.

2. It is sometimes possible to construct a small sump around the catch basin before final surfacing of the road. This is allowed because it can be a very effective method of sediment control.
3. Block and gravel filters, gravel and wire mesh filter barriers, and bag barriers filled with various filtering media placed around catch basins can be effective when the drainage area is 1 acre or less and flows do not exceed 0.5 cfs. It is necessary to allow for overtopping to prevent flooding. Many manufacturers have various inlet protection filters that are very effective in keeping sediment-laden water from entering the storm drainage system. The following are examples of a few common methods.

   a) **Block and gravel filters** (Figure D.3.5.G) are a barrier formed around an inlet with standard concrete block and gravel, installed as follows:

      - Height is 1 to 2 feet above the inlet.

- Recess the first row of blocks 2 inches into the ground for stability.
- Support subsequent rows by placing a 2x4 through the concrete block opening.
- Do not use mortar.
- Lay some blocks in the bottom row on their side for dewatering the pooled water.
- Place cloth or mesh with ½ inch openings over all block openings.
- Place gravel below the top of blocks on slopes of 2:1 or flatter.
- An alternate design is a gravel donut.

b) **Gravel and wire mesh filters** consist of a gravel barrier placed over the top of an inlet. This structure generally does not provide overflow. Install as follows:

- Cloth or comparable wire mesh with ½ inch openings is placed over inlet.
- Coarse aggregate covers the cloth or mesh.
- Height/depth of gravel should be 1 foot or more, 18 inches wider than inlet on all sides.

c) **Curb inlet protection with a wooden weir** is a barrier formed around an inlet with a wooden frame and gravel, installed as follows:

- Construct a frame and attach wire mesh (½ inch openings) and filter fabric to the frame.
- Pile coarse washed aggregate against the wire/fabric.
- Place weight on frame anchors.

d) **Curb and gutter sediment barriers** (Figure D.3.5.H) consist of sandbags or rock berms (riprap and aggregate) 3 feet high and 3 feet wide in a horseshoe shape, installed as follows:

- Bags of either burlap or woven geotextile fabric, filled with a variety of media such as gravel, wood chips, compost or sand stacked tightly allows water to pond and allows sediment to separate from runoff.
- Leave a "one bag gap" in the top row of the barrier to provide a spillway for overflow.
- Construct a horseshoe shaped berm, faced with coarse aggregate if using riprap, 3 x 3 and at least 2 feet from the inlet.
- Construct a horseshoe shaped sedimentation trap on the outside of the berm to sediment trap standards for protecting a culvert inlet.

4. **Excavated drop inlet sediment traps** are appropriate where relatively heavy flows are expected and overflow capability is needed. If emergency overflow is provided, additional end-of-pipe treatment may be required. Excavated drop inlets consist of an excavated impoundment area around a storm drain. Sediment settles out of the stormwater prior to enter the drain. Install according to the following specifications:

a) The impoundment area should have a depth of 1 - 2 feet measured from the crest of the inlet structure.

b) Side slopes of the excavated area must be no steeper than 2:1.

c) Minimum volume of the excavated area should be 35 cubic yards.

d) Install provisions for draining the area to prevent standing water problems.

e) Keep the area clear of debris.

f) Weep holes may be drilled into the side of the inlet.

g) Protect weep holes with wire mesh and washed aggregate.

DRAFT

h) Weep holes must be sealed when removing and stabilizing excavated area.

i) A temporary dike may be necessary on the down slope side of the structure to prevent bypass flow.

Maintenance Standards

1. Any accumulated sediment on or around inlet protection shall be removed immediately. Sediment shall not be removed with water, and all sediment must be disposed of as fill on site or hauled off site.
2. Any sediment in the catch basin insert shall be removed when the sediment has filled one-third of the available storage. The filter media for the insert shall be cleaned or replaced at least monthly.
3. Regular maintenance is critical for all forms of catch basin/inlet protection. Unlike many forms of protection that fail gradually, catch basin protection will fail suddenly and completely if not maintained properly.

FIGURE D.3.5.E FILTER FABRIC PROTECTION

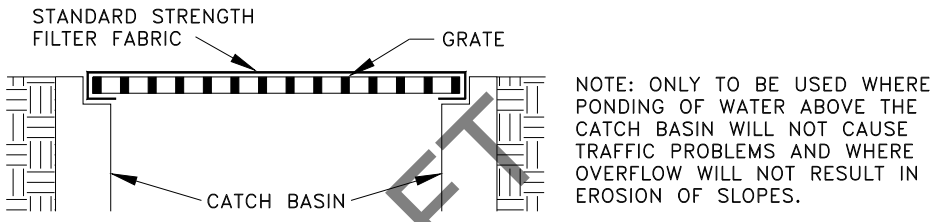

DRAFT

FIGURE D.3.5.F CATCH BASIN INSERT

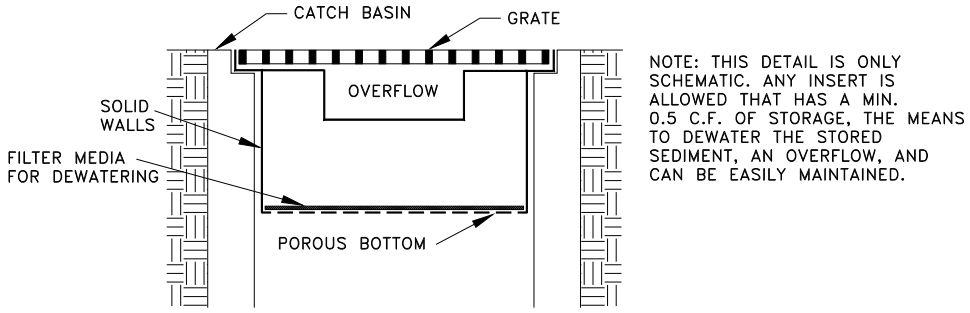

FIGURE D.3.5.G BLOCK AND GRAVEL CURB INLET PROTECTION

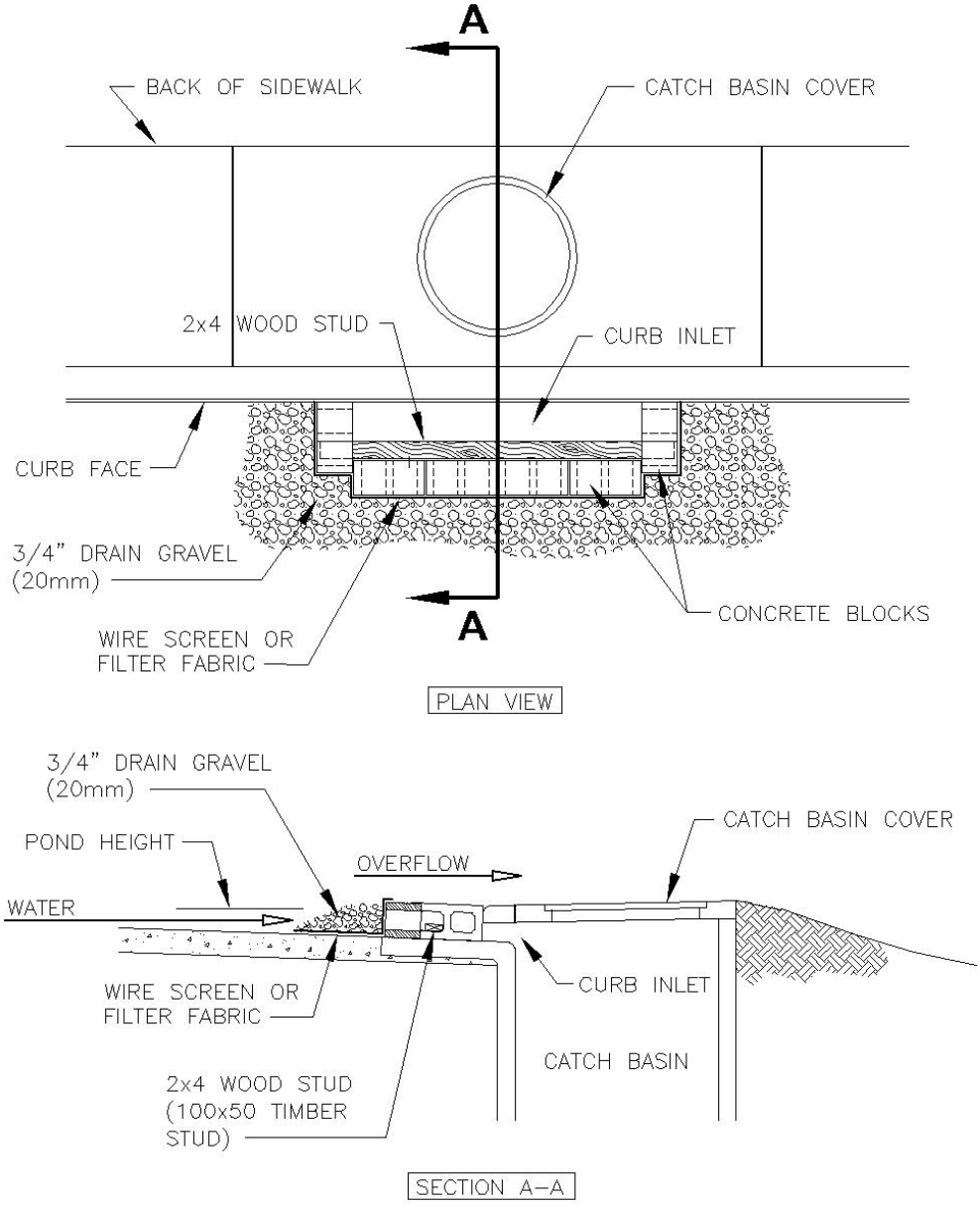

NOTES:

1. USE BLOCK AND GRAVEL TYPE SEDIMENT BARRIER WHEN CURB INLET IS LOCATED IN GENTLY SLOPING SEGMENT, WHERE WATER CAN POND AND ALLOW SEDIMENT TO SEPARATE FROM RUNOFF.
2. BARRIER SHALL ALLOW FOR OVERFLOW FROM SEVERE STORM EVENT.
3. INSPECT BARRIERS AND REMOVE SEDIMENT AFTER EACH STORM EVENT. SEDIMENT AND GRAVEL MUST BE REMOVED FROM THE TRAVELED WAY IMMEDIATELY.

BLOCK AND GRAVEL CURB INLET PROTECTION

FIGURE D.3.5.H CURB AND GUTTER BARRIER PROTECTION

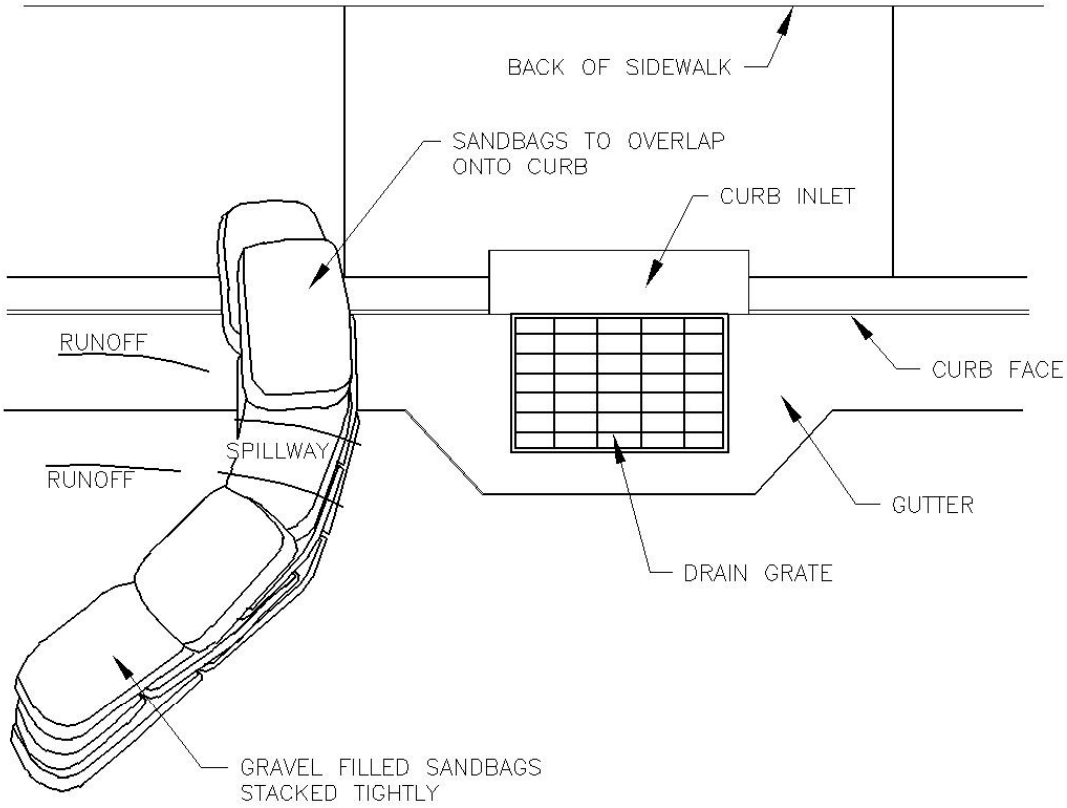

PLAN VIEW

NOTES:

1. PLACE CURB TYPE SEDIMENT BARRIERS ON GENTLY SLOPING STREET SEGMENTS, WHERE WATER CAN POND AND ALLOW SEDIMNENT TO SEPARATE FROM RUNOFF.
2. SANDBAGS OF EITHER BURLAP OR WOVEN GEOTEXTILE FABRIC, ARE FILLED WITH GRAVEL, LAYERED AND PACKED TIGHTLY.
3. LEAVE A ONE SANDBAG GAP IN THE TOP ROW TO PROVIDE A SPILLWAY FOR OVERFLOW.
4. INSPECT BARRIERS AND REMOVE SEDIMENT AFTER EACH STORM EVENT. SEDIMENT AND GRAVEL MUST BE REMOVED FROM THE TRAVELED WAY IMMEDIATELY.

CURB AND GUTTER BARRIER

D.3.6 SURFACE WATER COLLECTION

All surface water from disturbed areas shall be intercepted, conveyed to a sediment pond or trap, and discharged downslope of any disturbed areas. An exception is for areas at the perimeter of the site with drainage areas small enough to be treated solely with perimeter protection (see Section D.3.3). Also, if the soils and topography are such that no offsite discharge of surface water is anticipated up to and including the developed 2-year runoff event, surface water controls are not required. A 10-year/ KCRTS 15-minute peak flow shall be used for sizing surface water controls if the project size, expected timing and duration of construction, or downstream conditions warrant a higher level of protection (see the introduction to Section D.3.5). At the County's discretion, sites may be worked during the dry season without surface water controls, if there is some other form of protection of surface waters, such as a 100-foot forested buffer between the disturbed areas and adjacent surface waters. Significant sources of upslope surface water that drain onto disturbed areas shall be intercepted and conveyed to a stabilized discharge point downslope of the disturbed areas. Surface water controls shall be installed concurrently with rough grading.

Purpose: The purpose of surface water control is to collect and convey surface water so that erosion is minimized, and runoff from disturbed areas is treated by a sediment pond or trap. Surface water control essentially consists of three elements:

1. Interception of runoff on and above slopes
2. Conveyance of the runoff to a sediment pond or trap (if the runoff was collected from a disturbed area)
3. Release of the runoff downslope of any disturbed areas.

When to Install: Surface water controls shall be constructed during the initial grading of an area and must be in place before there is any opportunity for storm runoff to cause erosion.

Measures to Install: Interceptor dikes/swales intercept runoff, ditches and pipe slope drains convey the runoff, and riprap or level spreaders help release the runoff in a non-erosive manner. Each measure is to be used under different circumstances so there is very little overlap. However, the two options for releasing water in a non-erosive manner, outlet protection and level spreaders, can be somewhat interchangeable. See Figure D.3.6.A for a schematic drawing demonstrating the use of these measures.

DRAFT

FIGURE D.3.6.A SKETCH PLAN OF SURFACE WATER CONTROLS

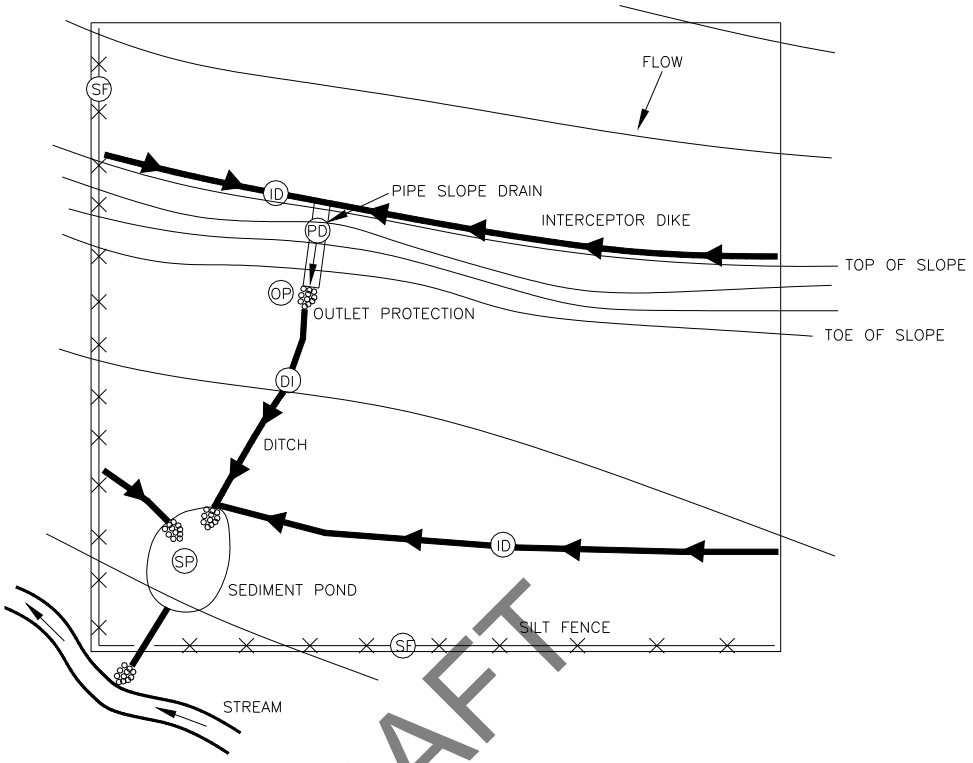

DRAFT

D.3.6.1 INTERCEPTOR DIKE AND SWALE

Code: ID or IS Symbol: ID or IS

Purpose

Interceptor dikes and swales intercept storm runoff from drainage areas on or above disturbed slopes and convey it to a sediment pond or trap. They may also be used to intercept runoff from undisturbed areas and convey the runoff to a point below any exposed soils. Interception of surface water reduces the possibility of slope erosion. Interceptor dikes and swales differ from ditches (see Section D.3.6.3) in that they are intended to convey smaller flows along low-gradient drainage ways to larger conveyance systems such as ditches or pipe slope drains.

Conditions of Use

Interceptor dikes and swales are required in the following situations:

1. At the top of all slopes in excess of 3H:1V and with more than 20 feet of vertical relief.
2. At intervals on any slope that exceeds the dimensions specified in this section for the horizontal spacing of dikes and swales.

Design and Installation Specifications

1. See Figure D.3.6.B for details of an interceptor dike and Figure D.3.6.C for an interceptor swale.

2. Interceptor dikes and swales shall be **spaced horizontally** as follows:

Average Slope	Slope Percent	Flowpath Length
20H:1V or less	3-5%	300 feet
(10 to 20)H:1V	5-10%	200 feet
(4 to 10)H:1V	10-25%	100 feet
(2 to 4)H:1V	25-50%	50 feet

3. For slopes steeper than 2H:1V with more than 10 feet of vertical relief, **benches** may be constructed or closer spaced interceptor dikes or swales may be used. Whichever measure is chosen, the spacing and capacity of the measures must be designed by the engineer and the design must include provisions for effectively intercepting the high velocity runoff associated with steep slopes.
4. If the dike or swale intercepts runoff from **disturbed areas**, it shall discharge to a stable conveyance system that routes the runoff to a sediment pond or trap (see Section D.3.5). If the dike or swale intercepts runoff that originates from **undisturbed areas**, it shall discharge to a stable conveyance system that routes the runoff downslope of any disturbed areas and releases the water at a stabilized outlet.
5. **Construction traffic** over temporary dikes and swales shall be minimized.

Maintenance Standards

1. Damage resulting from runoff or construction activity shall be repaired immediately.
2. If the facilities do not regularly retain storm runoff, the capacity and/or frequency of the dikes/swales shall be increased.

DRAFT

FIGURE D.3.6.B INTERCEPTOR DIKE

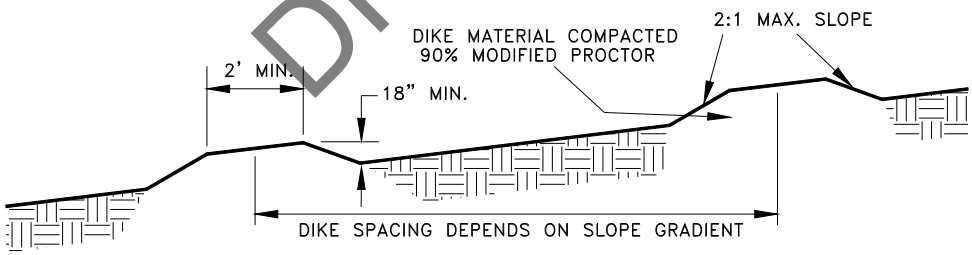

FIGURE D.3.6.C INTERCEPTOR SWALE

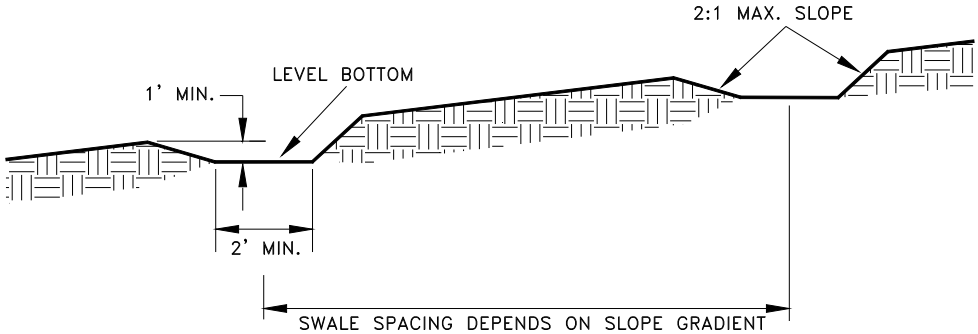

D.3.6.2 PIPE SLOPE DRAINS

Code: PD Symbol: 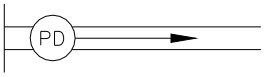

Purpose

Pipe slope drains are designed to carry concentrated runoff down steep slopes without causing erosion, or saturation of slide-prone soils. Pipe slope drains may be used to divert water away from or over bare soil to prevent gullies, channel erosion, and saturation of slide prone soils

Conditions of Use

Pipe slope drains should be used when a temporary or permanent stormwater conveyance is needed to move water down a steep slope to avoid erosion. Pipe slope drains may be:

1. Connected to new catch basins and used temporarily until all permanent piping is installed.
2. Used on any slope with a gradient of 2H:1V or greater and with at least 10 feet of vertical relief.
3. Used to drain water collected from aquifers exposed on cut slopes and convey it to the base of the slope.
4. Used to collect clean runoff from plastic sheet cover and direct away from any exposed soils.
5. Installed in conjunction with silt fence to drain collected water to a controlled area.
6. Used to divert small seasonal streams away from construction. Pipe slope drains have been used successfully on culvert replacement and extension projects. Large flex pipe may be used on larger streams during culvert removal, repair, or replacement.
7. Connected to existing downspouts and roof drains used to divert water away from work areas during building renovation, demolition, and construction projects.
8. Rock-lined ditches or other permanent, non-erosive conveyances used to convey runoff down steep slopes that are not steep slope hazard areas.

DRAFT

Design and Installation Specifications

1. See Figure D.3.6.D for details.
2. The **capacity** for temporary drains shall be sufficient to handle the developed 10-year peak flow using KCRTS with 15-minute time steps~~peak flow from a developed 10-year runoff event~~. Up to 30,000 square feet may be drained by each 6-inch minimum diameter pipe without computation of the peak flow. Up to 2 acres may be drained by each 12-inch minimum diameter pipe. Otherwise, the peak flow will need to be computed using the Rational Method described in Section 3.2.1 of the *Surface Water Design Manual* (*SWDM*).
3. The **maximum drainage area** allowed for any sized pipe is 10 acres. For larger areas, more than one pipe shall be used or a rock-lined channel shall be installed (see *SWDM* Section 4.4.1, "Open Channels").
4. The **soil** around and under the pipe and entrance section shall be thoroughly compacted.
5. The **flared inlet section** shall be securely connected to the slope drain and be fused or welded, or have flange-bolted mechanical joints to ensure a watertight seal. Ensure that the entrance area is stable and large enough to direct flow into the pipe.
6. Slope drains shall be continuously fused, welded, or flange-bolted mechanical joint pipe systems with proper anchoring to the soil.

7. Where slope drains cross steep **slope hazard areas** or their associated buffers, the installation shall be on the ground surface, accomplished with minimum alteration. In most circumstances, this requires that slope drains be constructed of corrugated metal, CPE, or equivalent pipe and installed by hand (see *SWDM* Section 4.2.1). Any area disturbed during installation or maintenance must be immediately stabilized.
8. If the pipe slope drain will convey **sediment-laden runoff**, the runoff must be directed to a sediment retention facility (see Section D.3.5). If the runoff is not from a disturbed area or is conveyed from a sediment trap or pond, it must be conveyed to a stabilized discharge point (see Section D.3.6.5).
9. Re-establish cover immediately on areas disturbed by the installation.

Maintenance Standards

1. The inlet shall not be undercut or bypassed by water. If there are problems, the head wall shall be appropriately reinforced.
2. No erosion shall occur at the outlet point. If erosion occurs, additional protection shall be added.

FIGURE D.3.6.D PIPE SLOPE DRAIN

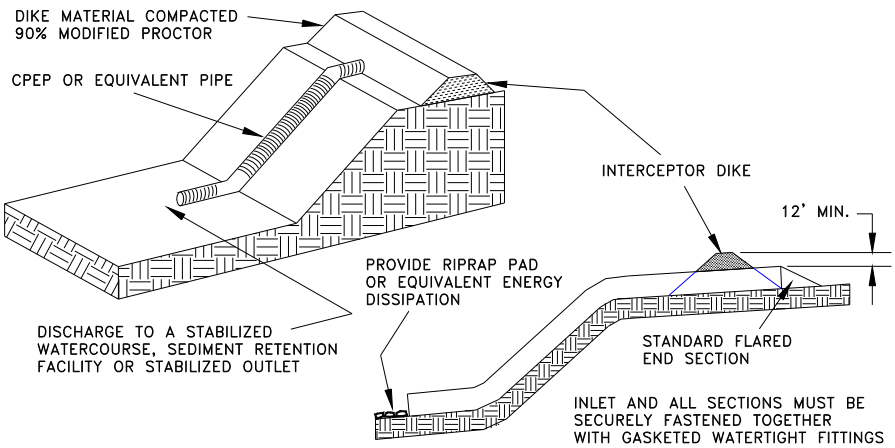

D.3.6.3 SUBSURFACE DRAINS

Purpose

To intercept, collect, and convey ground water to a satisfactory outlet, using a perforated pipe or conduit below the ground surface. Subsurface drains are also known as "French Drains." The perforated pipe provides a dewatering mechanism to drain excessively wet soils, provide a stable base for construction, improve stability of structures with shallow foundations, or to reduce hydrostatic pressure and to improve slope stability.

Conditions of Use

Use when excessive water must be removed from the soil. The soil permeability, depth to water table, and impervious layers are all factors that may govern the use of subsurface drains.

Design and Installation Specifications

1. Two types of drains may be used as follows:

   a) **Relief drains** are used either to lower the water table in large, relatively flat areas, improve the growth of vegetation, or to remove surface water. They are installed along a slope and drain in the direction of the slope. They may be installed in a grid pattern, a herringbone pattern, or a random pattern.

   b) **Interceptor drains** are used to remove excess groundwater from a slope, stabilize steep slopes, and lower the water table below a slope to prevent the soil from becoming saturated. They are installed perpendicular to a slope and drain to the side of the slope. They usually consist of a single pipe or single pipes instead of a patterned layout.

2. **Size of Drains** – Size subsurface drains to carry the required capacity without pressurized flow. Minimum diameter for a subsurface drain is 4 inches.

3. **Outlet** – Ensure that the outlet of a drain empties into a channel or other watercourse above the normal water level.

Maintenance Standards

1. Subsurface drains shall be checked periodically to ensure that they are free flowing and not clogged with sediment or roots.

2. The outlet shall be kept clear and free of debris.

3. Surface inlets shall be kept open and free of sediment and other debris.

4. Trees located too close to a subsurface drain often clog the system with roots. If a drain becomes clogged, relocate the drain or remove the trees as a last resort. Drain placement should be planned to minimize this problem.

5. Where drains are crossed by heavy equipment, the line shall be checked to ensure that it is not crushed and have adequate cover protection.

DRAFT

D.3.6.4 DITCHES

Code: DI Symbol:

Purpose

Ditches convey intercepted runoff from disturbed areas to and from sediment ponds or traps. They also convey runoff intercepted from undisturbed areas around the site to a non-erosive discharge point.

Conditions of Use

Ditches may be used anywhere that concentrated runoff is to be conveyed on or around the construction site. Temporary pipe systems may also be used to convey runoff.

Design and Installation Specifications

1. Channels and ditches shall be sized to accommodate the developed condition 10-year KCRTS 15-minute peak flow ~~from the developed 10-year runoff event~~ with 0.5 feet of freeboard. If no hydrologic analysis is required for the site, the Rational Method may be used [see Section 3.2.1 of the *Surface Water Design Manual* (*SWDM*)].

2. See *SWDM* Section 4.4.1 for open-channel design requirements.

3. The only exception to the requirements of *SWDM* Section 4.4.1 is the use of check dams, rather than grass lining, for channels in which the design flow velocity does not exceed 5 fps. See Figure D.3.6.E for details on check dam installation.

Maintenance Standards

1. Any sediment deposition of more than 0.5 feet shall be removed so that the channel is restored to its design capacity.
2. If the channel capacity is insufficient for the design flow, it must be determined whether the problem is local (e.g., a constriction or bend) or the channel is under-designed. If the problem is local, the channel capacity must be increased through construction of a berm(s) or by excavation. If the problem is under-design, the design engineer shall be notified and the channel redesigned to a more conservative standard to be approved by King County.
3. The channel shall be examined for signs of scouring and erosion of the bed and banks. If scouring or erosion has occurred, affected areas shall be protected by riprap or an erosion control blanket or net.

FIGURE D.3.6.E CHECK DAMS

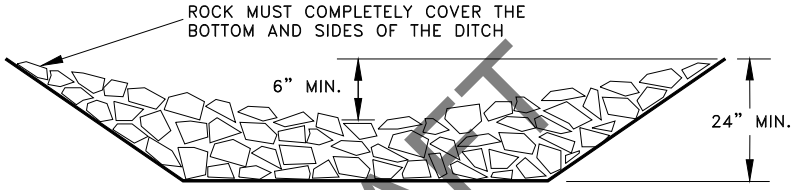

CROSS SECTION

DRAFT

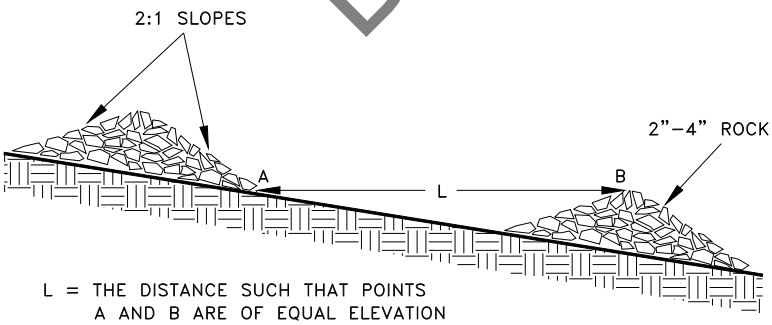

CHECK DAM SPACING

D.3.6.5 OUTLET PROTECTION

Code: OP Symbol: 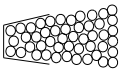

Purpose

Outlet protection prevents scour at conveyance outlets.

Conditions of Use

Outlet protection is required at the outlets of all ponds, pipes, ditches, or other approved conveyances, and where runoff is conveyed to a natural or manmade drainage feature such as a stream, wetland, lake, or ditch.

Design and Installation Specifications

For the standard pipe slope drains in Section D.3.6.2 and other smaller conveyance systems, the standard rock pad (6 feet by 8 feet) made of 1-foot thick quarry spall is adequate. For all other outlets, the outlet protection shall meet the requirements of the "Outfalls" section of Core Requirement #4 and Section 4.2.2 of the *Surface Water Design Manual*.

Maintenance Standards for Outlet Protection

If there is scour at the outlet, the eroded area shall be protected with more conservative measures proposed by the design engineer and approved by King County.

DRAFT

D.3.6.6 LEVEL SPREADER

Code: LS Symbol: 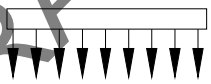

Purpose

Level spreaders convert concentrated runoff to sheet flow and release it onto areas stabilized by existing vegetation.

Conditions of Use

Level spreaders may be used where runoff from undisturbed areas or sediment retention facilities is discharged. This practice applies only where the spreader can be constructed on undisturbed soil and the area below the level lip is vegetated and low gradient (see below).

Note: Level spreaders are conceptually an ideal way to release stormwater since the vegetation and soil allow for the removal of fines from runoff that cannot be removed by settling or filtration. Unfortunately, the performance record of spreaders in the field is dismal. They are frequently under-designed and, despite the best installations, are rarely perfectly level, which results in the release of stormwater at a particular point. This concentrated runoff can result in catastrophic erosion downslope. Given such design failures, ***the use of spreaders is not encouraged****. However, where slopes are gentle and the water volume is relatively low, spreaders may still be the best method. When proposing their use, the designer shall carefully evaluate the site for possible concerns.*

Design and Installation Specifications

1. See Figure D.3.6.F for detail. Other designs may be used subject to County approval.

2. If runoff velocity as it enters the level spreader is more than 4 fps for the developed condition10-year/ KCRTS 15-minute peak flow, a **riprap apron** must be provided to dissipate energy before the runoff enters the spreader (Section D.3.6.5).
3. The **total spreader length** shall be at least the square root of the catchment area. The maximum length for an individual spreader is 50 feet, limiting the catchment area that a single spreader may serve to 2500 square feet. Although this is very small, four 50-foot level spreaders next to one another could serve nearly an acre (40,000 square feet). Multiple spreaders shall not be placed uphill or downhill from one another in a configuration that would allow water released from one spreader to enter a downslope spreader.
4. The area below the spreader for a horizontal distance of 100 feet shall not exceed 20 percent and shall be completely vegetated with no areas of instability or erosion. The topography for a horizontal distance of 50 feet below the spreader shall be uniform so that runoff is not funneled into a swale or channel immediately after its release.
5. The level spreader shall be **seeded and mulched** in accordance with Section D.3.2 (p. D-10).

Maintenance Standards

1. Any damage to the spreader shall be immediately repaired.
2. The downslope area shall be checked for signs of erosion and to verify that the spreader is not functioning as a point discharge. Any eroded areas shall be immediately stabilized, and the cause determined and eliminated if possible. If the erosion is recurrent and the design, even when properly installed and maintained, is not adequate to prevent erosion, a new method of releasing runoff shall be installed in accordance with the standards of this appendix. Any new design must be approved by King County.

DRAFT

FIGURE D.3.6.F LEVEL SPREADER

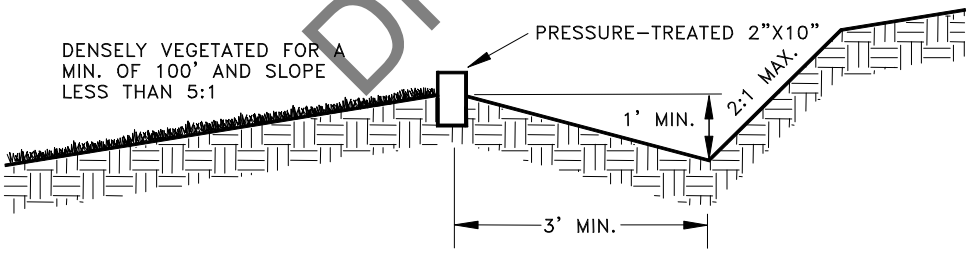

CROSS SECTION

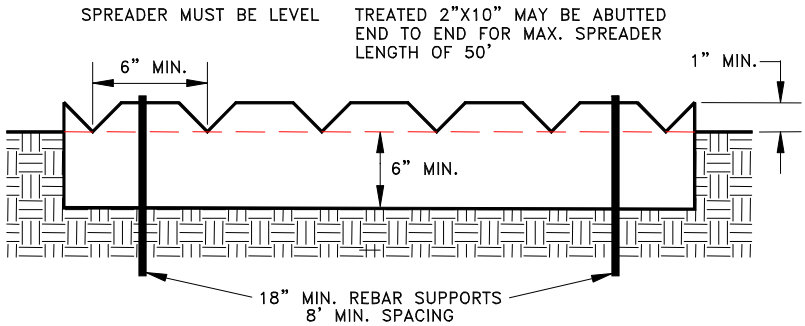

DETAIL OF SPREADER

D.3.7 DEWATERING CONTROL

Any runoff generated by dewatering shall be treated through construction of a sediment trap (Section D.3.5.1) when there is sufficient space or by releasing the water to a well vegetated, gently sloping area. Since pumps are used for dewatering, it may be possible to pump the sediment-laden water well away from the surface water so that vegetation can be more effectively utilized for treatment. Discharge of sediment-laden water from dewatering activities to surface and storm waters is prohibited. If dewatering occurs from areas where the water has come in contact with new concrete, such as tanks, vaults, or foundations, the pH of the water must be monitored and must be neutralized prior to discharge. Clean non-turbid ~~ge.~~dewatering water, such as well point ground water can be discharged to systems tributary to, or directly to surface waters provided the flows are controlled so no erosion or flooding occurs. Clean water must not be routed through a stormwater sediment pond. Highly turbid or contaminated dewatering water must be handled separately from stormwater.

Purpose: To prevent the untreated discharge of sediment-laden water from dewatering of utilities, excavated areas, foundations, etc.

When to Install: Dewatering control measures shall be used whenever there is a potential for runoff from dewatering of utilities, excavations, foundations, etc.

Measures to install:

1. Foundation, vault, excavation, and trench dewatering water that has similar characteristics to stormwater runoff at the site shall be discharged into a controlled conveyance system prior to discharge to a sediment trap or sediment pond. Foundation and trench dewatering water, which has similar characteristics to stormwater runoff at the site, must be disposed of through one of the following options depending on site constraints:
   a) Infiltration,
   b) Transport offsite in a vehicle, such as a vacuum flush truck, for legal disposal in a manner that does not pollute surface waters,
   c) Discharge to the sanitary sewer discharge with local sewer district approval if there is no other option, or
   d) Use of a sedimentation bag with outfall to a ditch or swale for small volumes of localized dewatering.
2. Clean, non-turbid dewatering water, such as well-point ground water, may be discharged via stable conveyance to systems tributary to surface waters, provided the dewatering flow does not cause erosion or flooding of receiving waters.
3. Highly turbid or contaminated dewatering water shall be handled separately from stormwater.

~~1. A straw bale or other filtering measures that remove solidsfilter shall be placed around the discharge from a dewatering pump.~~

~~2. If there is not space for a sediment trap or 25 feet of suitable vegetation, other filtration methods shall be required consistent with KCC 9.12. Dewatering structures shall be sized to allow water to flow through the filtering media without overflowing the structure.~~

~~3. Portable sediment tanks, such as Baker tanks, may be necessary to capture and treat sediment-laden runoff generated by dewatering.~~

~~4. Runoff from dewatering may have to be discharged to the sanitary sewer especially if the site is a known contaminated site and has a history of soil or groundwater contamination, specifically petroleum hydrocarbons, pH abnormalities, or metals contamination. An approval for discharge to the sanitary sewer must be secured from the local sewer agency.~~

DRAFT

D.3.8 DUST CONTROL

Preventative measures to minimize the wind transport of soil shall be taken when a traffic hazard may be created or when sediment transported by wind is likely to be deposited in water resources or adjacent properties.

Purpose: To prevent wind transport of dust from exposed soil surfaces onto roadways, drainage ways, and surface waters.

When to Install: Dust control shall be implemented when exposed soils are dry to the point that wind transport is possible and roadways, drainage ways, or surface waters are likely to be impacted. Dust control measures may consist of chemical, structural, or mechanical methods.

Measures to Install: Water is the most common dust control (or palliative) used in the area. When using water for dust control, the exposed soils shall be sprayed until wet, but runoff shall not be generated by spraying. Calcium chloride, Magnesium chloride, Lignin derivatives, Tree Resin Emulsions, and Synthetic Polymer Emulsions may also be used for dust control. Exposed areas shall be re-sprayed as needed. Oil shall not be used for dust control. The following table lists many common dust control measures. Some of the measures are not recommended for use in King County and must have prior approval prior to use from the DDES inspector assigned to specific projects.

DRAFT

TABLE D.3.8.A DUST CONTROL MEASURES*			
METHOD	**CONSIDERATIONS**	**SITE PREPARATION**	**RECOMMENDED APPLICATION RATE**
Water	-Most commonly used practice -Evaporates quickly -Lasts less than 1 day	For all liquid agents: -Blade a small surface -Crown or slope surface to avoid ponding -Compact soils if needed -Uniformly pre-wet at 0.03 – 0.3 gal/sq yd -Apply solution under pressure. Overlap solution 6 – 12 inches -Allow treated area to cure 0 – 4 hours -Compact area after curing -Apply second treatment before first treatment becomes ineffective	0.125 gal/sq yd every 20 to 30 minutes
Salts Calcium Chloride (CaCl)	-Restricts evaporation -Lasts 6-12 months -Can be corrosive -Less effective in low humidity -Can build up in soils and leach by rain		Apply 38% solution at 1.21L/m2 (0.27 gal/yd2) or as loose dry granules per manufacturer
Magnesium Chloride (MgCl)	-Restricts evaporation -Works at higher temperatures and lower humidity than CaCl -May be more costly than CaCl		Apply 26 – 32% solution at 2.3 L/m2 (0.5 gal/yd2)
Sodium Chloride (NaCl)	-Effective over smaller range of conditions -Less expensive -Can be corrosive -Less effective in low humidity		Per Manufacturer
Silicates	-Generally expensive -Available in small quantities -Require Second application		
Surfactants	-High evaporation rates -Effective for short time periods -Must apply frequently		
Copolymers	-Forms semi-permeable transparent crust -Resists ultraviolet radiation and moisture induced breakdown -Last 1 to 2 years		750 – 940 L/ha (80 – 100 gal/ac)
Petroleum Products	-Used oil is prohibited as a dust control method -Bind soil particles -May hinder foliage growth -Environmental and aesthetic concerns -Higher cost		Use 57 – 63% resins as base. Apply at 750 – 940 L/ha (80-100 gal/ac)
Lignin Sulfonate	-Paper industry waste product -Acts as dispersing agent -Best in dry climates -Can be slippery -Will decrease Dissolved Oxygen in waterways therefore cannot be used adjacent to surface water systems		Loosen surface 25-50 mm (1 – 2 inches) Need 4-8% fines
Vegetable Oils	-Coat grains of soils, so limited binding ability -May become brittle -Limited availability		Per Manufacturer
Spray on Adhesives	-Available as organic or synthetic -Effective on dry, hard soils -Forms a crust -Can last 3 to 4 years		Per Manufacturer

DRAFT

D.3.9 FLOW CONTROL

Surface water from disturbed areas must be routed through the project's onsite flow control facility or other provisions must made to prevent increases in the existing site conditions 2-year and 10-year runoff peaks discharging from the project site during construction.

Purpose: The purpose of surface water flow control is to mitigate increases in runoff peaks that occur during construction as a result of clearing vegetation, compacting the soil, and adding impervious surface. Such increases can cause or aggravate downstream flooding and erosion.

When to Install: Surface water flow control shall be installed or otherwise provided prior to any clearing and/or grading of the site, except that required to construct the surface water flow control facilities.

Measures to Use: The project's onsite flow control facility or other equivalent storage facility that meets the peak-matching performance criteria stated above.

DRAFT

D.4 ESC PERFORMANCE AND COMPLIANCE PROVISIONS

The changing conditions typical of construction sites call for frequent field adjustments of existing ESC measures or additional ESC measures in order to meet required performance. In some cases, strict adherence to specified measures may not be necessary or practicable based on site conditions or project type. The provisions contained in this section specify the minimum performance required and the circumstances under which the County may add to or vary from the ESC standards in this appendix to meet this performance.

D.4.1 ESC PERFORMANCE

ESC measures shall be applied/installed and maintained so as to prevent, to the maximum extent practicable, the transport of sediment from the project site to downstream drainage systems or surface waters or into onsite wetlands, streams, or lakes or onto adjacent properties. This performance is intended to be achieved through proper selection, installation, and operation of the above ESC measures as detailed in the *ESC Standards* (detached Appendix D) and approved by the County. However, the ESC supervisor designated per Section D.5.4 or the County may determine at any time during construction that such approved measures are not sufficient and additional action is required based on one of the following criteria:

1. IF a turbidity test of surface and storm water discharges leaving the project site is greater than the benchmark value of 25 NTU (nephelometric turbidity units) set by the Washington State Department of Ecology, but less than 250 NTU, the ESC Supervisor shall do all of the following:
   a) Review the ESC plan for compliance and make appropriate revisions within 7 days of the discharge that exceeded the benchmark of 25 NTU, AND
   b) Fully implement and maintain appropriate ESC measures as soon as possible but no later than 10 days after the discharge that exceeded the benchmark, AND
   c) Document ESC implementation and maintenance in the site log book.
2. IF a turbidity test of surface or storm water entering onsite wetlands, streams, or lakes indicates a turbidity level greater than 5 NTU above background when the background turbidity is 50 NTU or less, or 10% above background when the background turbidity is greater than 50 NTU, then corrective actions and/or additional measures beyond those specified in Section 1.2.5.1 shall be implemented as deemed necessary by the County inspector or onsite ESC supervisor.
3. IF discharge turbidity is 250 NTU or greater, the ESC Supervisor shall do all of the following:
   a) Notify the County by telephone, AND
   b) Review the ESC plan for compliance and make appropriate revisions within 7 days of the discharge that exceeded the benchmark of 25 NTU, AND
   c) Fully implement and maintain appropriate ESC measures as soon as possible but no later than 10 days after the discharge that exceeded the benchmark, AND
   d) Document ESC implementation and maintenance in the site log book. AND
   e) Continue to sample discharges until turbidity is 25 NTU or lower, or the turbidity is no more than 10% over background turbidity.
4. IF the County determines that the condition of the construction site poses a **hazard to adjacent property** or may **adversely impact drainage facilities or water resources**, THEN additional measures beyond those specified in Section 1.2.5.1 may be required by the County.

DRAFT

~~1.IF a turbidity test of storm and surface water discharges leaving the ***project site*** or entering onsite wetlands, streams, or lakes indicates a **turbidity level greater than 25 NTU** (nephelometric units) above the background levels of offsite storm and surface water flows entering the ***project site***, OR if storm and surface water discharges from onsite activity areas exceed 25 NTU, THEN corrective actions and/or additional measures beyond those specified in Section D.3 shall be implemented as deemed necessary by the County inspector or ESC supervisor.~~ *Note: The ESC supervisor shall have a turbidity meter onsite and shall use it whenever runoff occurs from onsite activities and during storm events.*

~~2.IF a turbidity test indicates a **turbidity level greater than 100 NTU**, THEN County inspection staff shall be notified immediately and corrective actions and/or additional measures beyond those specified in Section D.3 shall be implemented as deemed necessary by the County.~~

~~1. IF the County determines that the condition of the construction site poses a **hazard to adjacent property** or may **adversely impact drainage facilities or water resources**, THEN additional measures beyond those specified in Section D.3 may be required by the County.~~

D.4.2 FLEXIBLE COMPLIANCE

Some projects may meet the intent of Core Requirement #5 while varying from specific ESC requirements in this appendix. If a project is designed and constructed such that it meets the intent of core requirement, the County may determine that strict adherence to a specific ESC requirement is unnecessary; an approved adjustment (see Section 1.4) from the *SWDM* is not required in these circumstances. Certain types of projects are particularly likely to warrant this greater level of flexibility; for instance, projects on relatively flat, well drained soils, projects that are constructed in closed depressions, or projects that only disturb a small percentage of a forested site may meet the intent of this requirement with very few ESC measures.

DRAFT

D.4.3 ROADS AND UTILITIES COMPLIANCE

Road and utility projects often pose difficult erosion control challenges because they frequently cross surface waters and because narrow right-of-way constrains areas available to store and treat sediment-laden water. In most cases, the standards of this appendix may be applied to such linear projects without modification. For instance, the ability to use perimeter control rather than a sediment retention facility for small drainage areas (see Section D.3.3) will apply to many of these projects.

However, there may be some projects that cannot reasonably meet the standards of Core Requirement #5 and this appendix. In these cases, other measures may be proposed that will provide reasonable protection. An adjustment is not required for such projects, unless the County determines that measures proposed by the applicant fail to meet the intent of Core Requirement #5 and this appendix, and that significant adverse impacts to surface water may result. Examples of other measures that may be taken in lieu of the standards of this appendix are:

1. Phasing the project so that the site is worked progressively from end to end, rather than clearing and grubbing the entire length of the project. This results in smaller exposed areas for shorter durations, thus reducing the erosion risk. It is recommended that there be no more than 500 feet of open trench during any phase of construction.
2. Placement of excavated materials from utility trenches on the upslope side of the excavation, to minimize transport of sediment outside of the project area.
3. Mulching and vegetating cut and fill slopes as soon as they are graded. Frequently, this is done at the end of construction when paving or utility installation is complete. Vegetating these areas at the start of the project stabilizes those areas most susceptible to erosion.
4. Protecting all catch basin inlets with catch basin inserts or other inlet protection when these do not drain to ponds or traps. This will not provide the same level of protection as a sediment pond or trap, but can remove most of the sand-sized material entrained in the runoff.

5. Phasing the project so that all clearing and grading in critical area buffers occurs in the dry season. This substantially reduces the chance of erosion and allows for rapid revegetation in the late summer and early fall.
6. Using approved flocculent or other chemical treatment approved by King County to reduce the turbidity of water released from sediment ponds.
7. Hiring a private consultant with expertise in ESC to review and monitor the site.

If alternatives are used, it may be appropriate to develop a monitoring program that would monitor compliance with the performance standard of Core Requirement #5 and/or impacts to nearby water resources. Of particular concern are impacts to salmonid spawning gravels. McNeil sampling is a possible method of sampling to determine impacts to spawning gravels (see Section D.5.3).

D.4.4 ALTERNATIVE AND EXPERIMENTAL MEASURES

In general, the *Surface Water Design Manual* only contains those BMPs that are standards of the local industry. There are a variety of other BMPs available that may also be used, even though they are not included in this appendix. Such alternatives may be approved without an adjustment if the alternative will produce a compensating or comparable result with the measures in this appendix. Variations on or modifications of the BMPs in this appendix may also be granted based on the same criteria. Technical support will be provided by WLRD when requested by DDES.

An adjustment is only required for those products or techniques that are so new and untested as to be experimental. If the County determines that a proposed alternative is experimental, then an experimental adjustment must be obtained (see Section 1.4.4 of the *SWDM*). In addition, the new product or technique must be approved through the state Department of Ecology's *CTAPE program*.[8] The intent of this requirement is not to discourage new techniques, but to insure that new techniques are monitored and documented for adequacy and possible inclusion in subsequent versions of the *SWDM*. An example of a product that would have required an experimental adjustment prior to this version of the manual is the catch basin insert (see Section D.3.5.3) because it was not equivalent to any existing measure.

DRAFT

[8] CTAPE stands for Chemical Technology Assessment Protocol – Ecology. For more information, see Ecology's website at http://www.ecy.wa.gov/programs/wq/stormwater/newtech/tape_ctape.html.

DRAFT

D.5 ESC IMPLEMENTATION REQUIREMENTS

This section describes the ESC implementation requirements that are required at each construction site. The measures and practices correspond to the implementation requirements in Core Requirement #5. Three of the sections [the ESC report (Section D.5.1, below), ESC maintenance requirements (Section D.5.4, p. D-75), and final site stabilization (Section D.5.5, p. D-76)] are required of every project. The rest of the sections are special requirements that may apply to the project depending on site conditions and project type. The introductory paragraphs at the beginning of most sections present the purpose of the measures and when they should be applied to the site. Compliance with the implementation requirements (as appropriate for the site) ensures compliance with the ESC measures. Note, however, that additional measures shall be required by the County if the existing standards are insufficient to protect adjacent properties, drainage facilities, or water resources.

D.5.1 ESC PLAN

An *ESC plan*, showing the location and details of ESC measures, is required for all proposed projects and shall include an *ESC report*, which includes supporting information for providing ESC measures and meeting ESC implementation requirements. A copy of the ESC plan with ESC report shall be kept at the project site throughout all phases of construction. All of the materials required for the ESC report are standard parts of engineering plan submittals for projects requiring drainage review. The simplest approach to preparing this report is to compile the pieces during preparation for submittal and include the report as a separate part of the ESC plan submittal package. The ESC report shall include the following:

1. A detailed **construction sequence**, as proposed by the design engineer or erosion control specialist, identifying required ESC measures and implementation requirements;
2. A **technical information report** (TIR) and ESC plan for King County review in accordance with Sections 2.3.1 and 2.3.3 of the *Surface Water Design Manual*. Incorporate any King County review comments as necessary to comply with Core Requirement #5 of the *SWDM* (Section 1.2.5) and the *Erosion and Sediment Control Standards* in this appendix;
3. Any **calculations** or information necessary to size ESC measures and demonstrate compliance with Core Requirement #5;
4. An **inspection and maintenance program** in accordance with Section D.5.4 (p. D-75) that includes the designation of a certified ESC supervisor as point of contact; and
5. **Anticipated changes or additions** necessary during construction to ensure that ESC measures perform in accordance with Core Requirement #5 and Sections D.3 (p. D-7) and D.5 (p. D-73).

While the ESC plan focuses on the initial measures to be applied to the site, any changes or additions necessary during construction to ensure that ESC measures perform in accordance with Core Requirement #5 and Sections D.3 and D.5 must be identified in the ESC report. The County may require large, complex projects to phase construction and submit multiple ESC plans for different stages of construction. Development of new ESC plans is not required for changes that are necessary during construction.

D.5.2 WET SEASON REQUIREMENTS

Any site with exposed soils during the wet season (October 1 to April 30) shall be subject to the special provisions below. In addition to the ESC cover measures (see Section D.3.2, p. D-10), these provisions include covering any newly seeded areas with mulch and identifying and seeding as much disturbed area as possible prior to September 23 in order to provide grass cover for the wet season. A "wet season ESC plan" must be submitted and approved by the County before work proceeds or continues.

DRAFT

Wet Season Special Provisions

All of the following provisions for wet season construction are detailed in the referenced sections. These requirements are listed here for the convenience of the designer and the reviewer.

1. The allowed time that a disturbed area may remain unworked without cover measures is reduced to two consecutive working days, rather than seven (Section D.3.2).
2. Stockpiles and steep cut and fill slopes are to be protected if unworked for more than 12 hours (Section D.3.2).
3. Cover materials sufficient to cover all disturbed areas shall be stockpiled on site (Section D.3.2).
4. All areas that are to be unworked during the wet season shall be seeded within one week of the beginning of the wet season (Section D.3.2.5).
5. Mulch is required to protect all seeded areas (Section D.3.2.1).
6. Fifty linear feet of silt fence (and the necessary stakes) per acre of disturbance must be stockpiled on site (Section D.3.3.1).
7. Construction road and parking lot stabilization are required for all sites unless the site is underlain by coarse-grained soil (Section D.3.4.2).
8. Sediment retention is required unless no offsite discharge is anticipated for the specified design flow (Section D.3.5).
9. Surface water controls are required unless no offsite discharge is anticipated for the specified design flow (Section D.3.6).
10. Phasing and more conservative BMPs must be evaluated for construction activity near surface waters (Section D.5.3).
11. Any runoff generated by dewatering may be required to discharge to the sanitary sewer (with appropriate discharge authorization), portable sand filter systems, or holding tanks.
12. The frequency of maintenance review increases from monthly to weekly (Section D.5.4).

DRAFT

D.5.3 CRITICAL AREAS RESTRICTIONS

Any construction that will result in disturbed areas on or within a stream or associated buffer, a wetland or associated buffer, or within 50 feet of a lake shall be subject to the special provisions below. These provisions include, whenever possible, phasing the project so that construction in these areas is limited to the dry season. The County may require more conservative BMPs, including more stringent cover requirements, in order to protect surface water quality. Any project proposing work within 50 feet of a steep slope hazard area shall evaluate the need for diverting runoff that might flow over the top of the slope.

Critical Areas Special Provisions

Any project that disturbs areas on or within a stream or associated buffer, wetland or associated buffer, or within 50 feet of a lake has the potential to seriously damage water resources, even if the project is relatively small. While it is difficult to require specific measures for such projects because the ESC plan must be very site specific, the following recommendations shall be incorporated into the plan where appropriate:

1. Whenever possible, phase all or part of the project so that it occurs during the dry season. If this is impossible, November through February shall be avoided since this is the most likely period for large, high-intensity storms.

2. All projects shall be completed and stabilized as quickly as possible. Limiting the size and duration of a project is probably the most effective form of erosion control.
3. Where appropriate, sandbags or an equivalent barrier shall be constructed between the project area and the surface water in order to isolate the construction area from high water that might result due to precipitation.
4. Additional perimeter protection shall be considered to reduce the likelihood of sediment entering the surface waters. Such protection might include multiple silt fences, silt fences with a higher AOS, construction of a berm, or a thick layer of organic mulch upslope of a silt fence.
5. If work is to occur within the ordinary high water mark of a stream, most projects must isolate the work area from the stream by diverting the stream or constructing a cofferdam. Certain small projects that propose only a small amount of grading may not require isolation since diversions typically result in disturbance and the release of some sediment to the stream. For such small projects, the potential impacts from construction with and without a diversion must be weighed.
6. If a stream must be crossed, a temporary bridge shall be considered rather than allowing equipment to utilize the streambed for a crossing.

For projects in or near a salmonid stream, it may be appropriate to monitor the composition of any spawning gravels within a quarter-mile of the site with a McNeil sampler or similar method approved by King County before, during, and after construction. The purpose of such monitoring would be to determine if the fine content of the gravels increases as a result of construction impacts. Monitoring results could be used to guide erosion control efforts during construction and as a threshold for replacing spawning gravels if the fine content rises significantly.

DRAFT

D.5.4 MAINTENANCE REQUIREMENTS

All ESC measures shall be maintained and reviewed on a regular basis as prescribed in the maintenance requirements for each BMP and in this section. For projects in Targeted, Full, or Large Project Drainage Review, the **applicant must designate an ESC supervisor** who shall be responsible for the performance, maintenance, and review of ESC measures and for compliance with all permit conditions relating to ESC as described in the *ESC Standards*. For projects that disturb one acre or more of land, ~~The~~ the ESC supervisor must be a **Certified Professional in Erosion and Sediment Control** (see www.cpesc.net for more information) or a **Certified Erosion and Sediment Control Lead** whose certification is recognized by King County. King County recognition of certification means that the individual has taken a King County-approved third party training program and has passed the King County-approved test for that training program. Additionally, the applicant's selection of an ESC supervisor must be approved by King County.

The ESC supervisor shall review the site at least twice a month during the dry season, weekly during the wet season, and within 24 hours of significant storms. The County may require that a written record of these reviews be kept on site with copies submitted to DDES within 48 hours. The County shall also require that the applicant designate an ESC supervisor with demonstrated experience in ESC to perform these reviews and to be responsible for ESC.

ESC Supervisor

The name, address, and phone number of the ESC supervisor shall be supplied to the County prior to the start of construction. A sign shall be posted at all primary entrances to the site identifying the ESC supervisor and his/her phone number. The requirement for an ESC supervisor does not relieve the applicant of ultimate responsibility for the project and compliance with King County Code.

For **highly sensitive sites**, the County may require that the applicant designate a certified ESC supervisor with demonstrated expertise in erosion and sediment control. The qualifications of such a person shall include the successful completion of an approved erosion control class or program and several years of construction supervision or inspection and a background in geology, soil science, or agronomy.

Typically, if a geotechnical consultant is already working on the project, the consultant may also be the designated ESC supervisor. The design engineer may also be qualified for this position. This requirement shall only be used for sensitive sites that pose an unusually high risk of impact to surface waters. At a minimum, the project site shall meet all of the following conditions in order to require the applicant to designate a certified ESC supervisor with demonstrated expertise in ESC:

- Alderwood soils or other soils of Hydrologic Group C or D
- Five acres of disturbance
- Large areas (i.e., two or more acres) with slopes in excess of 10 percent.

Proximity to streams or wetlands or phosphorus-sensitive lakes, such as Lake Sammamish, shall also be a factor in determining if a site warrants an ESC specialist. However, proximity alone shall not be a determining factor because even projects that are a considerable distance from surface waters can result in significant impacts if there is a natural or constructed drainage system with direct connections to surface waters.

If DDES determines that the onsite ESC measures are inadequately installed, located, or maintained, DDES shall require the appointment of a certified ESC supervisor with expertise in erosion and sediment control.

Documentation

If DDES requires that a written record be maintained, a standard ESC Maintenance Report, included in Section D.8.1 (p. D-97), may be used. A copy of all the required maintenance reports shall be kept on site throughout the duration of construction. Detailed maintenance requirements for each ESC measure are provided in Section D.3.

Review Timing

During the wet season, weekly reviews shall be carried out every 6 to 8 calendar days. During the dry season, monthly reviews shall be carried out within 3 days of the calendar day for the last inspection (e.g., if an inspection occurred on June 6, then the next inspection must occur between July 3 and July 9). Reviews shall also take place within 24 hours of significant storms. In general, a significant storm is one with more than 0.5 inches of rain in 24 hours or less. Other indications that a storm is "significant" are if the sediment ponds or traps are filled with water, or if gullies form as a result of the runoff.

Note: The site is to be in compliance with the regulations of this appendix at all times. The requirement for periodic reviews does not remove the applicant's responsibility for having the site constantly in compliance with Core Requirement #5 and the requirements of this appendix. The reviews are a mechanism to ensure that all measures are thoroughly checked on a regular basis and that there is documentation of compliance. The requirement for these reviews does not mean that ESC is to be ignored in between.

DRAFT

D.5.5 FINAL STABILIZATION

Prior to obtaining final construction approval, the site shall be stabilized, the structural ESC measures, such as silt fences and sediment traps, removed, and drainage facilities cleaned. The removal of ESC measures is not required for those projects, such as plats, that will be followed by additional construction under a different permit. In these circumstances, the need for removing or retaining the measures must be evaluated on a site-specific basis.

To obtain final construction approval, the following conditions must be met:

1. All disturbed areas of the site shall be **vegetated or otherwise permanently stabilized**. At a minimum, disturbed areas shall be seeded and mulched (see Section D.3.2.5) with a high likelihood that sufficient cover will develop shortly after final approval. Mulch without seeding is not adequate to allow final approval of the permit, except for small areas of mulch used for landscaping. The only

exceptions to these requirements are lots within a plat that are to be developed under an approved residential permit immediately following plat approval. In these cases, mulch and/or temporary seeding are adequate for cover.

2. Structural measures such as, but not limited to, silt fences, pipe slope drains, construction entrances, storm drain inlet protection, and sediment traps and ponds shall be removed from the site. Measures that will quickly decompose, such as brush barriers and organic mulches, may be left in place. In the case of silt fences, it may be best to remove fences in conjunction with the seeding, since it may be necessary to bring machinery back in to remove them. This will result in disturbed soils that will again require protection. The DDES inspector must approve an applicant's proposal to remove fencing prior to the establishment of vegetation. In some cases, such as residential building following plat development, it shall be appropriate to leave some or all ESC measures for use during subsequent development. This shall be determined on a site-specific basis.

3. All permanent surface water facilities, including catch basins, manholes, pipes, ditches, channels, flow control facilities, and water quality facilities, shall be cleaned. Any offsite catch basin that required protection during construction (see Section D.3.5.3) shall also be cleaned

4. If only the infrastructure of the site has been developed (e.g., subdivisions and short plats) with building construction to occur under a different permit, then the critical area buffers, Critical Area Tracts, or Critical Area Setback Areas shall be clearly marked as described in Section D.3.1 (p. D-8) in order to alert future buyers and builders.

D.5.6 NPDES REQUIREMENTS

DRAFT

As part of the implementation of the National Pollutant Discharge Elimination System (NPDES), projects that will disturb one or more ~~than one~~ acres for purposes of constructing or allowing for construction of a development, or projects disturbing less than one acre that are part of a larger *common plan of development or sale*[9] that will ultimately disturb one acres, must apply for coverage under the Washington State Department of Ecology's Baseline General Permit for Stormwater. In general, the erosion control plan required by the *Surface Water Design Manual* is equivalent to that required by the State through the *Stormwater Management Manual for Western Washington* (DOE, 2005~~1~~). The DOE stormwater permit application requires the filing of a Notice of Intent (NOI) at least 30 days prior to the start of construction. The only major requirement of the stormwater permit that is not included in the *SWDM* is a public notice requirement. Note that this public notice for Ecology's stormwater permit may be published concurrently with other public notices required for permits or SEPA. Contact the Department of Ecology at (360) 407-7156 for complete information on permit thresholds, applications, and requirements.

D.5.7 FOREST PRACTICE PERMIT REQUIREMENTS

Projects that will clear more that two acres of forest or 5,000 board feet of timber must apply for a Class IV Special Forest Practice permit from the Washington State Department of Natural Resources (WSDNR). All such clearing is also subject to the State Environmental Policy Act (RCW 43.21C) and will require SEPA review. King County assumes lead agency status for Class IV permits and the application may be consolidated with the associated King County development permit or approval. The permit must be initiated with WSDNR, but will then be transferred over to King County to conduct the SEPA review and grant the permit. Contact the WSDNR for complete information on permit thresholds, applications, and requirements.

[9] ***Common plan of development or sale*** means a site where multiple separate and distinct construction activities may take place at different times or on different schedules, but still under a single plan. Examples include: 1) phased projects and projects with multiple filings or lots, even if the separate phases or filings/lots will be constructed under separate contract or by separate owners (e.g. a development where lots are sold to separate builders); 2) a development plan that may be phased over multiple years, but is still under a consistent plan for long-term development; and 3) projects in a contiguous area that may be unrelated but still under the same contract, such as construction of a building extension and a new parking lot at the same facility.

DRAFT

D.6 EROSION AND SEDIMENT CONTROL PLANS

This section details the specifications and contents for erosion and sediment control (ESC) plans. An ESC plan includes the plan's drawings plus an ESC report, which provides all supporting information and any additional direction necessary for implementing ESC measures and meeting ESC implementation requirements. The ESC plan must be submitted to DDES as part of a complete engineering plan to facilitate proper drainage review. A copy of the approved ESC plan (with ESC report) must be kept on the project site (see Section D.5.1, p. D-73) at all times during the construction phase.

ESC Plan General Specifications

The **site improvement plan** shall be used as the base of the ESC plan. Certain detailed information (e.g., pipe catch basin size, stub-out locations, etc.) that is not relevant may be omitted to make the ESC plan easier to comprehend. At a minimum, the ESC plan shall include all of the information required for the **base map of a site improvement plan** (see Table 2.3.1A of the *Surface Water Design Manual*), as well as existing and proposed roads, driveways, parking areas, buildings and drainage facilities, utility corridors not associated with roadways, *relevant critical areas*[10] and associated buffers, and proposed final topography. A smaller scale may be used to provide better comprehension and understanding.

The ESC plan shall generally be designed for proposed topography, not existing topography, since rough grading is usually the first step in site disturbance. The ESC plan shall **address all phases of construction** (e.g., clearing, grading, installation of utilities, surfacing, and final stabilization). The County may require large, complex projects to phase construction and submit multiple ESC plans for different stages of construction.

The ESC plan outlines the minimum requirements for anticipated site conditions. During construction, **ESC plans shall be revised as necessary** by the ESC supervisor or as directed by King County to address changing site conditions, unexpected storm events, or non-compliance with the ESC performance criteria in Section D.4.1 (p. D-69). If non-compliance with the ESC performance criteria occurs, the plan must be updated within 7 days of inspections or investigations. Implementation of the onsite changes must occur within 10 days.

DRAFT

The following list provides the basic information requirements for the ESC plan. This information shall be consistent with that in Section 8 of the technical information report (TIR) required in the engineering plan submittal (see Section 2.3.1 of the *SWDM*). Note that the ESC plan's drawings may be simplified by the use of the symbols and codes provided for each ESC measure in Section D.3. In general, the ESC plan's drawings shall be submitted as a separate plan sheet(s). However, there may be some relatively simple projects where providing a separate grading and ESC plan drawing is unnecessary.

1. Identify areas with a high **susceptibility to erosion**.
2. Provide all details necessary to clearly illustrate the **intent of the ESC design**.
3. Include ESC measures for all on- and offsite **utility construction** included in the permit.
4. Specify the **construction sequence**. The construction sequence shall be specifically written for the proposed project. An example construction sequence is provided in Section D.8.3 (p. D-101).
5. Include **standard ESC plan notes** (see Section D.8.2, p. D-100) and specify the construction sequence. ESC Notes and a sample construction sequence are provided in the Reference Section.
6. Include an **inspection and maintenance program** for ESC measures, including designation of a certified ESC supervisor and identification of phone numbers for 24-hour contact.
7. Include the **basis and calculations** for selection and sizing of ESC measures.

[10] *Relevant critical areas*, for the purposes of drainage review, include aquatic areas, wetlands, flood hazard areas, erosion hazard areas, landslide hazard areas, steep slope hazard areas, and critical aquifer recharge areas.

ESC Plan Measure-Specific Information

The ESC plan must include the following information specific to applicable ESC measures and implementation requirements. As noted above, this information may need to be updated or revised during the life of the project by the ESC supervisor or as directed by King County.

Clearing Limits

1. **Delineate** clearing limits (areas to remain uncleared).
2. Provide **details** sufficient for installation of markings for maintenance of clearing limits.

Cover Measures

1. Specify the type and location of **temporary cover measures** to be used on site.
2. If **more than one type of cover measure** is to be used on site, indicate the areas where the different measures shall be used, including steep cut and fill slopes.
3. If the type of cover measures to be used will vary depending on the time of year, soil type, gradient, or some other factor, **specify the conditions that control the use of the different measures**.
4. Specify the nature and location of **permanent cover measures**. If a landscaping plan is prepared, this may not be necessary.
5. Specify the approximate amount of cover measures necessary to cover all disturbed areas.
6. If **netting, blankets, or plastic sheeting** are specified, provide typical details sufficient for installation and maintenance.
7. Specify the **mulch types, seed mixes, fertilizers, and soil amendments** to be used, as well as the application rate for each item.
8. For **surface roughening**, describe methods, equipment and areas where surface roughening will be use.
9. If **PAM** is used on a site, show location(s) and describe application method.
10. When **compost blankets** are used, show site location, application rates, and the name of the supplier to document that compost meets WAC 173-350-22 standards and meets Grade A quality specifications.

DRAFT

Perimeter Protection

1. Specify the **location and type** of perimeter protection to be used.
2. Provide **typical details** sufficient for installation and maintenance of perimeter protection.
3. If a **silt fence** is to be used, specify the type of fabric.
4. If **compost berms or socks** are used, documentation must be provide to assure the supplier meets the criteria under WAC 173-350-220 and compost meets Grade A quality standards.

Traffic Area Stabilization

1. Locate the **construction entrance**(s).
2. Provide **typical details** sufficient for installation and maintenance of the construction entrance.
3. Locate the **construction roads and parking areas**.
4. Specify the measure(s) that will be used to create **stabilized construction roads and parking areas**. Provide sufficient detail to install and maintain.

5. If a **wheel wash** or **tire bath system** will be installed, provide location, typical details for installation and maintenance.
6. Provide a list of **dust control** products that will be used onsite and the location of potential application areas.

Sediment Retention

1. Show the **locations** of all sedimentation ponds and traps.
2. Dimension pond **berm widths** and all inside and outside pond slopes.
3. Indicate the **trap/pond storage** required and the depth, length, and width dimensions.
4. Provide typical **section views** throughout the pond and outlet structure.
5. If **chemical or electrocoagulation treatment** of sediment-laden waters will be used, approval documentation from DOE must be included.
6. Provide details for **disposal of contaminated or chemically treated waters** (e.g., where Chitosan or CO2 have been used).
7. Include appropriate **approval documentation from local sewer districts** if contaminated or chemically treated water will be discharged to the sanitary sewer.
8. Provide typical details of the **control structure** and **dewatering mechanism**.
9. Detail **stabilization techniques** for the outlet/inlet protection.
10. Provide details sufficient to install **cell dividers**.
11. Specify mulch and/or recommended **cover of berms and slopes**.
12. Indicate the **required depth gage** with a prominent mark at 1-foot depth for sediment removal.
13. Indicate **catch basins** that are to be protected.
14. Provide **details of the catch basin protection** sufficient to install and maintain.

DRAFT

Surface Water Control

1. **Locate** all pipes, ditches, and interceptor ditches, dikes, and swales that will be used to convey stormwater.
2. Provide **details** sufficient to install and maintain all **conveyances**.
3. Indicate locations of **outlet protection** and provide detail of protections.
4. Indicate locations and outlets of any possible **dewatering systems**. Provide details of alternative discharge methods from dewatering systems if adequate infiltration rates cannot be achieved.
5. Indicate the location of any **level spreaders** and provide details sufficient to install and maintain.
6. Provide all **temporary pipe inverts**.
7. Provide location and specifications for the **interception of runoff from disturbed areas** and the conveyance of the runoff to a non-erosive discharge point.
8. Provide **locations** of **rock check dams**.
9. Provide **details**, including front and side sections, of typical **rock check dams**.

Wet Season Requirements

1. Provide a **list** of all applicable wet season requirements.

2. Clearly identify that from October 1st through April 30th, no soils shall be exposed for more than two consecutive working days. Also note that this **two-day requirement** may be applied at other times of the year if storm events warrant more conservative measures.
3. Clearly identify that **exposed soils shall be stabilized** at the end of the workday prior to a weekend, holiday, or predicted rain event.

Critical Areas Restrictions

1. **Delineate and label the following critical areas**, and any applicable buffers, that are on or adjacent to the project site: aquatic areas, wetlands, flood hazard areas, erosion hazard areas, landslide hazard areas, steep slope hazard areas, and critical aquifer recharge areas.
2. If construction creates disturbed areas within any of the above listed critical areas or associated buffers, specify the type, locations, and details of any **measures or other provisions necessary to comply with the critical area restrictions** in Appendix D and protect surface waters and steep slopes.

DRAFT

D.7 SMALL SITE ESC

Smaller project sites have similar erosion and sediment control (ESC) needs. This section offers a simplified set of requirements for applying erosion and sediment controls to certain smaller project sites and guides the user through the preparation and submittal of a Small Site ESC Plan with the permit application.

D.7.1 INTRODUCTION TO SMALL SITE ESC

What is ESC and Why is it Required for My Site?

The basic erosion and sediment control requirement—that sediment transport and other construction related pollutants shall be prevented to the maximum extent practicable from leaving the site—**applies to all projects in King County**. All projects, including those with small project sites, are required to use erosion and sediment control (ESC) measures. ESC measures prevent soil erosion during development of the site. The types of measures required for small sites are generally simple to construct and easy to maintain, and with few exceptions do not require engineering or formal design. Examples of such measures include silt fences, phasing or minimizing clearing, ~~terracing exposed slopes,~~ routing water around exposed soils, and placing straw or other mulching materials and cover exposed soils.

ESC is required because soils eroded from the site are *always* deposited downstream in pipes, streams, or lakes. Soils deposited in a pipe or channel reduce its capacity to convey flows and can increase the likelihood of flooding. Soils in streams can also clog the gravels that salmon use for spawning. Nutrients associated with soils that reach lakes can upset the chemical balance of the lake, causing excessive growth of algae and decreasing recreational uses such as swimming, boating, and fishing.

DRAFT

Which Projects May Use Small Site Erosion and Sediment Control Requirements?

All ~~proposed~~ projects that do any amount of land disturbing activity are subject to the ESC standards in this appendix per KCC 16.82.095(A) regardless of whether a permit is required or drainage review under the *Surface Water Design Manual* is triggered. Any such project that is not subject to drainage review under the *Surface Water Design Manual* and that disturbs soil on less than ~~3~~ 1 acre~~s~~ of land ~~and add less than 2,000 square feet of new impervious surface~~ may use the Small Site ESC requirements contained in this section. ~~These~~ In addition, these projects must apply erosion and sediment control ~~per~~ in accordance with KCC 16.62~~ even though they may not be subject to drainage review under the *Surface Water Design Manual*~~.

~~In addition, all~~Any proposed project~~s~~ subject to Small Project Drainage Review as determined in Section 1.1.2.1 of the *Surface Water Design Manual*, and which disturbs soil on less than ~~3~~ 1 acre~~s~~ of land, may use the Small Site ESC requirements contained in this section. These same requirements are contained in Appendix C of the *Surface Water Design Manual*, which details the drainage requirements for small agricultural and single family residential building or subdivision projects subject to Small Project Drainage Review.

What Will I Be Required To Do?

It is the responsibility of both the applicant and the contractor to minimize erosion and the transport of sediment to the greatest extent possible. You and/or your contractor will be required to evaluate each of the small site ESC requirements specified in Section D.7.2 below for applicability to your project site. This evaluation and the proposed ESC measures to be used to meet these requirements will need to be documented in a Small Site ESC Plan that must be submitted to DDES for approval prior to commencing land disturbing activities. See the submittal requirements in Section D.7.5. ~~Erosion and sediment control is a two step process that (1) minimizes the amount of sediment mobilized, and (2) traps any mobilized sediment before it leaves the site.~~

~~Examples of erosion controls include use of mulches or other cover materials, marked/minimized clearing, and routing of water around exposed soils. Installation and maintenance of silt fencing is an example of sediment trapping. ESC techniques that are particularly suitable for small sites are described below (Section D.7.2).~~

D.7.2 SMALL SITE ESC REQUIREMENTS

For projects that disturb less than 1 acre of land, all of the following small site ESC requirements must be evaluated for applicability to the proposed project:

A. MARK CLEARING LIMITS/MINIMIZE CLEARING

Prior to beginning land disturbing activities, all clearing limits, sensitive areas and their buffers, and trees that are to be preserved within the construction area shall be clearly marked, both in the field and on the small site ESC plan, to prevent damage and offsite impacts. Also, clearing shall be minimized to the maximum extent practicable. See "**Mark Clearing Limits/Minimize Clearing**," Section D.7.4.1 (p. D-87), for more detailed specifications.

B. MINIMIZE SEDIMENT TRACKED OFFSITE

1. Establish a stabilized entrance for construction vehicle access to minimize the tracking of sediment onto public roads. Entrance and exit shall be limited to one route, if possible. See "**Stabilized Construction Entrance**," Section D.3.4.1 (p. D-39), for detailed specifications.
2. If sediment is tracked offsite, public roads shall be cleaned thoroughly at the end of each day, or more frequently during wet weather, if necessary to prevent sediment from entering waters of the state. Sediment shall be removed from roads by shoveling or pickup sweeping and shall be transported to a controlled sediment disposal area. Street washing will be allowed only after sediment is removed in this manner. Street wash wastewater shall be controlled by pumping back onsite, or otherwise be prevented from discharging into drainage systems tributary to surface waters. This requirement **shall be included as a note** on the small site ESC plan.

DRAFT

C. CONTROL SEDIMENT

Runoff from disturbed areas must pass through a sediment control measure to prevent the transport of sediment downstream until the disturbed area is fully stabilized. Sediment controls must be installed as one of the first steps in grading and shall be functional before other land disturbing activities take place. One or more the following sediment controls may be used to meet this requirement:

- **Silt Fence** (See Section D.3.3.1, p. D-30)
- **Vegetated Strip** (See Section D.3.3.3, p. D-34)
- **Triangular Silt Dike** (See Section D.3.3.4, p. D-34)
- **Storm Drain Inlet Protection** (See Section D.3.5.3, p. D-51)

D. STABILIZE EXPOSED SOILS

All exposed and unworked soils shall be stabilized through the application of **cover measures** to protect the soil from the erosive forces of raindrop impact, flowing water, and wind erosion. One or more of the following **cover measures** may be used to meet this requirement during the construction phase:

- **Mulching** (See Section D.3.2.2, p. D-13)
- **Plastic Covering** (See Section D.3.2.4, p. D-17)
- **Nets and Blankets** (See Section D.3.2.3, p. D-15)

- **Seeding** (See Section D.3.2.6, p. D-21)
- **Sodding** (See Section D.3.2.7, p. D-25)

Cover measures shall be **applied in accordance with the following requirements**:

1. Cover measures must be installed if an area is to remain unworked for more than seven days during the dry season (May 1 to September 30) or for more than two consecutive working days during the wet season (October 1 to April 30). These time limits may be relaxed if an area poses a low risk of erosion due to soil type, slope gradient, anticipated weather conditions, or other factors. Conversely, the County may reduce these time limits if site conditions warrant greater protection (e.g., adjacent to significant aquatic resources or highly erosive soils) or if significant precipitation is expected.
2. Any area to remain unworked for more than 30 days shall be seeded or sodded unless the County determines that winter weather makes vegetation establishment infeasible. During the wet season, exposed ground slopes and stockpile slopes with an incline of 3 horizontal to 1 vertical (3H:1V) or steeper and with more than ten feet of vertical relief shall be covered if they are to remain unworked for more than 12 hours. Also during the wet season, the material necessary to cover all disturbed areas must be stockpiled on site. The intent of these cover requirements is to have as much area as possible covered during any period of precipitation.

E. CONTROL RUNOFF

Stormwater runoff originating on the ***site*** and/or entering the ***site*** from offsite areas must be controlled so as to minimize erosion of disturbed areas and exposed cut and fill slopes. The following runoff control measures shall be used as needed per the conditions of use and specifications for each measure:

- **Interceptor Dikes and Swales** (see Section D.3.6.1, p. D-57 for conditions of use and specifications)
- **Ditches** (see Section D.7.4.2, p. D-88 for conditions of use and specifications)
- **Pipe Slope Drain** (see Section D.7.4.3, p. D-89 for conditions of use and specifications)

DRAFT

F. CONTROL DEWATERING

Accumulated water in foundation areas, excavations, and utility trenches shall be removed and disposed of in a manner that does not pollute surface waters or cause downstream erosion or flooding. See "**Dewatering Control**," Section D.3.7 (p. D-65), for detailed specifications.

G. CONTROL OTHER POLLUTANTS

All construction activities shall be done in a manner that prevents pollution of surface waters and ground waters as specified in the King County's *Stormwater Pollution Prevention Manual (SPPM)*. See "**Control of Other Pollutants**," Section D.7.4.4 (p. D-90), for specific measures and references to applicable activity sheets in the *SPPM*. References to applicable activity sheets in *SPPM* shall be included in the small site ESC plan.

H. FINAL STABILIZATION

1. Prior to final construction approval, the ***project site*** shall be stabilized to prevent sediment-laden water from leaving the ***project site*** after project completion. All disturbed areas of the ***project site*** shall be vegetated or otherwise permanently stabilized. At a minimum, disturbed areas must be seeded and mulched to ensure that sufficient cover will develop shortly after final approval. Mulch without seeding is adequate for small areas to be landscaped before October 1.
2. All temporary ESC measures shall be removed within 30 days after final site stabilization is achieved or after the temporary measures are no longer needed. Trapped sediment shall be removed or stabilized onsite. Disturbed soil areas resulting from removal of measures or vegetation shall be permanently stabilized with seeding or sodding.

~~The following measures will be required on small sites in order to minimize onsite erosion and prevent mobilized sediment from leaving the site:~~

~~1. Stabilized construction entrance~~

~~2. Mulching or other cover methods~~

~~3. Minimized clearing~~

~~4. Silt fencing or other perimeter protection~~

~~5. Winter (or wet season) stabilization~~

~~6. Final stabilization.~~

D.7.3 SMALL SITE ESC IMPLEMENTATION REQUIREMENTS

Projects that disturb less than 1 acre of land must implement the ESC measures determined necessary in Section D.7.2 in accordance with the following requirements:

1. The placement and type of proposed ESC measures are to be shown on a **Small Site ESC plan**. This plan must be in accordance with the specifications for such plans outlined in Section D.7.5 unless otherwise directed by DDES.
2. If DDES finds that implementation of the proposed **Small Site ESC plan is insufficient** to prevent the discharge of sediment or other pollutants to the maximum extent practicable, additional measures will be required by DDES. In some cases, an ESC plan or a complete Construction Stormwater Pollution Plan prepared by a ***civil engineer*** per Chapter 2 of the *Surface Water Design Manual* may be required.
3. The contractor or other persons performing construction activities shall comply with the **stormwater pollution prevention measures/BMPs** specified for such activities in the King County *Stormwater Pollution Prevention Manual*. A note to this effect must be put on the approved Small Site ESC plan.
4. Prior to commencing construction, the applicant must identify to the County a **contact person** responsible for overseeing the installation and maintenance of required ESC measures and compliance with the *Stormwater Pollution Prevention Manual* during construction. The name and contact information for this person must be on or attached to Small Site ESC plan at the time of construction.
5. Both the **applicant and contractor are responsible** for implementation and maintenance of the approved ESC plan and any additional measures required by the County.
6. The **Small Site ESC plan shall be retained onsite** or within reasonable access to the site. The plan shall be modified whenever there is a significant change in the design, construction, operation, or maintenance at the construction site that has, or could have, a significant effect on the discharge of pollutants to surface waters. The plan shall be modified, if during inspections or investigations conducted by the County, it is determined that the plan is ineffective in eliminating or significantly minimizing pollutants in stormwater discharges from the site. The plan shall be modified as necessary to include additional or modified measures designed to correct problems identified.

~~Typically, a combination of all of the above measures are required during construction, unless specific site conditions exist that make a particular measure unnecessary, as determined by DDES. Other measures may be allowed or required if these are inappropriate for the project or fail to contain sediment on the project site. A description of other measures that may be needed for successful ESC on some sites, and a more detailed description of those included here, can be found in Section D.3, "ESC Measures" (p. D-7).~~

~~The placement and type of proposed ESC measures are shown on a **small site ESC plan**. Required features of this plan are outlined in Section D.7.3, "Submittal Requirements" (p. D-91D-87).~~

DRAFT

D.7.4 ESC MEASURES MODIFIED FOR SMALL SITES

This section presents supplementary or modified ESC measures for use on small sites (i.e., construction sites of projects disturbing less than 1 acre of land.

~~D.7.2.1 STABILIZED CONSTRUCTION ENTRANCE~~

~~Construction entrances are stabilized to reduce the amount of sediment transported onto paved roads by motor vehicles or runoff by constructing a stabilized pad of quarry spalls at entrances to construction sites. Construction entrances shall be stabilized wherever traffic will be leaving a construction site and traveling on paved roads or other paved areas within 1,000 feet of the site.~~

~~See Section D.3.4.1 (p. D-40D-39) for design and installation specifications and maintenance standards.~~

~~D.7.2.2 MULCHING OR OTHER COVER MEASURES~~

~~The cover measures described below are applicable to small sites.~~

~~Mulching~~

~~The purpose of mulching soils is to provide immediate temporary protection from erosion. Mulch also enhances plant establishment by conserving moisture, holding fertilizer, seed, and topsoil in place, and moderating soil temperatures. There is an enormous variety of mulches that may be used. Only the most common types are discussed in this section.~~

~~See Section D.3.2.2 (p. D-13) for conditions of use, design and installation specifications, and maintenance standards.~~

~~Nets and Blankets~~

~~Erosion control nets and blankets are intended to prevent erosion and hold seed and mulch in place on steep slopes and in channels so that vegetation can become well established. In addition, some nets and blankets can be used to permanently reinforce turf to protect drainage ways during high flows. Nets are strands of material woven into an open, but high-tensile strength net (for example, jute matting). Blankets are strands of material that are not tightly woven, but instead form a layer of interlocking fibers, typically held together by a biodegradable or photodegradable netting (for example, excelsior or straw blankets). They generally have lower tensile strength than nets, but cover the ground more completely. Coir (coconut fiber) fabric comes as both nets and blankets.~~

~~See Section D.3.2.3 (p. D-15) for conditions of use, design and installation specifications, and maintenance standards.~~

~~Plastic Covering~~

~~Plastic covering provides immediate, short-term erosion protection to slopes and disturbed areas.~~

~~See Section D.3.2.4 (p. D-17) for conditions of use, design and installation specifications, and maintenance standards.~~

D.7.4.1 MARK CLEARING LIMITS / MINIMIZE CLEARING

Purpose

Minimizing clearing is the most effective method of erosion control. Undisturbed vegetation intercepts and slows rainwater. Plant roots hold soil in place, and dead vegetation on the ground acts as a mulch.

DRAFT

Applications

Clearing limits shall be marked and clearing minimized on any ***site*** where significant areas of undisturbed vegetation will be retained.

Design Specifications

1. Minimizing clearing should be incorporated into the ***site*** design. Clearing limits must be marked on the small site ESC plan.
2. On the ground, clearing limits must be clearly marked with brightly colored tape or plastic or metal safety fencing. If tape is used, it should be supported by vegetation or stakes, and should be about 3 to 6 feet high and highly visible. Equipment operators should be informed of areas of vegetation that are to be left undisturbed.
3. The duff layer, native top soil, and natural vegetation shall be retained in an undisturbed state to the maximum extent practicable. If it is not practicable to retain the duff layer in place, it should be stockpiled on-site, covered to prevent erosion, and replaced immediately upon completion of the ground disturbing activities.

Maintenance

Fencing shall be inspected regularly and repaired or replaced as needed.

~~Minimizing clearing is the most effective method of erosion control. Undisturbed vegetation intercepts and slows rainwater. Plant roots hold soil in place, and dead vegetation on the ground acts as a mulch. Clearing limits shall be marked and clearing minimized on any site where significant areas of undisturbed vegetation will be retained.~~

~~See Section D.3.1 (p. D-8) for design and installation specifications and maintenance standards.~~

DRAFT

D.7.4.2 DITCHES

Purpose

Ditches intercept and convey runoff from disturbed areas to sediment control locations. They also convey runoff intercepted from undisturbed areas around the construction site to a non-erosive discharge point.

Conditions of Use

Ditches may be used anywhere that concentrated runoff is to be conveyed on or around the construction site. Temporary pipe systems may also be used to convey runoff.

Design and Installation Specifications

1. Up to 30,000 square feet may be drained by a 12-inch deep trapezoidal ditch with a 1-foot bottom width. Up to 2 acres may be drained by an 18-inch deep trapezoidal ditch with a 1-foot bottom width. Ditches draining larger areas will need to be sized by a ***civil engineer***.
2. Ditch side slopes shall be no steeper than 2H:1V.
3. Ditches on 5% or steeper grades shall be armored with rip rap or contain crushed rock check dams spaced such that the crest of each dam is even with the toe of the next upstream dam. See Figure D.3.6.E (p. D-62)for details on check dam installation.

Maintenance Standards

1. Any sediment deposition of more than 0.5 feet shall be removed so that the channel is restored to its design capacity.

2. If the channel capacity is insufficient for the design flow, it must be determined whether the problem is local (e.g., a constriction or bend) or the channel is under-designed. If the problem is local, the channel capacity must be increased through construction of a berm(s) or by excavation. If the problem is under-design, the design engineer shall be notified and the channel redesigned to a more conservative standard to be approved by King County.
3. The channel shall be examined for signs of scouring and erosion of the bed and banks. If scouring or erosion has occurred, affected areas shall be protected by riprap or an erosion control blanket or net.

D.7.4.3 PIPE SLOPE DRAIN

Purpose

Pipe slope drains are designed to carry concentrated runoff down steep slopes without causing erosion, or saturation of slide-prone soils. Pipe slope drains may be used to divert water away from or over bare soil to prevent gullies, channel erosion, and saturation of slide prone soils

Conditions of Use

Pipe slope drains should be used when a temporary or permanent stormwater conveyance is needed to move water down a steep slope to avoid erosion. Pipe slope drains may be:

1. Used on any slope with a gradient of 2H:1V or greater and with at least 10 feet of vertical relief.
2. Used to drain water collected from aquifers exposed on cut slopes and convey it to the base of the slope.
3. Used to collect clean runoff from plastic sheet cover and direct away from any exposed soils.
4. Installed in conjunction with silt fence to drain collected water to a controlled area.

DRAFT

Design and Installation Specifications

1. See Figure D.3.6.D (p. D-60) for details.
2. Up to 30,000 square feet may be drained by each 6-inch minimum diameter pipe. Up to 2 acres may be drained by each 12-inch minimum diameter pipe.
3. The **maximum drainage area** allowed for any 12-inch pipe is 2 acres. For larger areas, more than one pipe shall be used.
4. The **soil** around and under the pipe and entrance section shall be thoroughly compacted.
5. The **flared inlet section** shall be securely connected to the slope drain and be fused or welded, or have flange-bolted mechanical joints to ensure a watertight seal. Ensure that the entrance area is stable and large enough to direct flow into the pipe.
6. Slope drains shall be continuously fused, welded, or flange-bolted mechanical joint pipe systems with proper anchoring to the soil.
7. Re-establish cover immediately on areas disturbed by the installation.

Maintenance Standards

1. The inlet shall not be undercut or bypassed by water. If there are problems, the head wall shall be appropriately reinforced.
2. No erosion shall occur at the outlet point. If erosion occurs, additional protection shall be added.

D.7.4.4 CONTROL OF OTHER POLLUTANTS

Purpose

To prevent the discharge of pollutants resulting from construction activities.

Application

Pollution control measures shall be used whenever there is a potential for the discharge to ground or surface water of any pollutants used on the site.

Pollution Control Measures

The following pollution control measures shall be implemented as applicable using activity-specific BMPs detailed in the King County *Stormwater Pollution Prevention Manual (SPPM)*:

1. All pollutants, including waste materials, that occur onsite shall be handled and disposed of in a manner that does not cause contamination of stormwater. See *SPPM* Activity Sheets A-8, A-11, A-12, A-16, A-17, A-22, A-29, A-38, and A-41.

2. Cover, containment, and protection from vandalism shall be provided for all chemicals, liquid products, petroleum products, and non-inert wastes present on the site (see Chapter 173-304 WAC for the definition of inert waste). Onsite fueling tanks shall include secondary containment. See *SPPM* Activity Sheets A-2, A-3, A-4, A-6, A-8, and A-9.

3. Maintenance and repair of heavy equipment and vehicles involving oil changes, hydraulic system drain down, solvent and de-greasing cleaning operations, fuel tank drain down and removal, and other activities which may result in discharge or spillage of pollutants to the ground or into stormwater runoff must be conducted using spill prevention measures, such as drip pans. Contaminated surfaces shall be cleaned immediately following any discharge or spill incident. Emergency repairs may be performed onsite using temporary plastic placed beneath and, if raining, over the vehicle. See *SPPM* Activity Sheets A-13, A-17, and A-18.

4. Application of agricultural chemicals, including fertilizers and pesticides, shall be conducted in a manner and at application rates that will not result in loss of chemical to stormwater runoff. Manufacturers' recommendations for application rates and procedures shall be followed. See *SPPM* Activity Sheets A-5, A-25, and A-26.

5. Measures shall be used to prevent or treat contamination of stormwater runoff by pH modifying sources. These sources include, but are not limited to, bulk cement, cement kiln dust, fly ash, new concrete washing and curing waters, waste streams generated from concrete grinding and sawing, exposed aggregate processes, and concrete pumping and mixer washout waters. Stormwater discharges shall not cause or contribute to a violation of the water quality standard for pH in the receiving water. See *SPPM* Activity Sheets A-19, A-20, A-29, A-43, and A-44.

DRAFT

~~D.7.2.4 SILT FENCING AND OTHER PERIMETER PROTECTION~~

~~Perimeter protection to filter sediment from sheetwash shall be located downslope of all disturbed areas and shall be installed prior to upslope grading. The following perimeter protection measures are applicable to small sites.~~

~~Silt Fence~~

~~Use of a silt fence reduces the transport of coarse sediment from a construction site by providing a temporary physical barrier to sediment and reducing the runoff velocities of overland flow. Silt fence may be used downslope of all disturbed areas.~~

~~See Section D.3.3.1 (p. D-31D-30) for design and installation specifications and maintenance standards.~~

~~Vegetated Strip~~

~~Vegetated strips reduce the transport of coarse sediment from a construction site by providing a temporary physical barrier to sediment and reducing the runoff velocities of overland flow. Vegetated strips may be used downslope of all disturbed areas.~~

~~See Section D.3.3.3 (p. D-35D-34) for design and installation specifications and maintenance standards.~~

~~Triangular Silt Dike (Geotextile Encased Check Dam)~~

~~Triangular silt dikes (TSDs) may be used as check dams, for perimeter protection, for temporary soil stockpile protection, for drop inlet protection, or as a temporary interceptor dike. Silt dikes, if attached to impervious surfaces with tack or other adhesive agent may also be used as temporary wheel wash areas, or concrete washout collection areas.~~

~~See Section D.3.3.4 (p. D-35D-34) for conditions of use, design and installation specifications, and maintenance standards.~~

~~D.7.2.5 WINTER STABILIZATION~~

~~Purpose~~

~~In order to minimize sediment-laden runoff, as much of the bare and disturbed portions of the site as possible should be covered during any period of precipitation. Once sediment is mobilized, it is much more difficult to effectively control.~~

~~Application~~

~~All sites require winter stabilization between October 1 and April 30 (the wet season).~~

~~Design Specifications~~

~~During the above time frame, slopes and stockpiles 3H:1V or steeper and with more than 10 feet of vertical rise shall be covered if they are to remain unworked for more than 12 hours. Other disturbed areas shall be covered or mulched according to D.3.2.2 (p. D-13) if they are to remain unworked for more than two days. Cover material sufficient to cover all disturbed areas shall be stockpiled on site at the beginning of the wet season. Areas that are to be left unworked during the winter shall be seeded prior to September 23.~~

~~Maintenance~~

~~The site should be inspected weekly and immediately before, during, and after storms. Cover and other erosion control measures shall be repaired and enhanced as necessary to prevent or minimize sediment runoff and transport.~~

~~D.7.2.6 FINAL STABILIZATION~~

~~Purpose~~

~~Final stabilization minimizes sediment-laden runoff from the site after construction has been completed.~~

~~Application~~

~~All sites require final stabilization prior to final construction approval.~~

DRAFT

~~Design Specifications~~

~~Prior to final construction approval, the site shall be stabilized to prevent sediment-laden water from leaving the site after project completion. All disturbed areas of the site shall be vegetated or otherwise permanently stabilized. At a minimum, disturbed areas must be seeded and mulched to ensure that sufficient cover will develop shortly after final approval. Mulch without seeding is adequate for small areas to be landscaped before October 1.~~

~~All permanent surface water facilities (including catch basins, manholes, pipes, ditches, channels, flow control facilities, and water quality facilities) impacted by sedimentation during construction must be cleaned.~~

~~Maintenance~~

~~Permanent erosion control is the responsibility of the owner. The site must be kept stabilized using landscaping, mulch, or other measures to prevent sediment-laden water from leaving the site and to prevent sediment from being transported onto adjacent properties and roads.~~

DRAFT

D.7.5 SMALL SITE ESC SUBMITTAL REQUIREMENTS

A *Small Site ESC Plan* must be submitted for all projects that are eligible to use the Small Site ESC requirements in this section. For projects in Small Project Drainage Review that disturb soil on less than ~~3~~ 1 acre~~s~~ of land, this plan is part of the Small Project Drainage Plan described in the *Small Project Drainage Requirements* (Appendix C of the *Surface Water Design Manual*). For other projects, including those that may not be subject to drainage review, this plan would be submitted as directed by DDES. Directions for preparing a Small Site ESC Plan are provided below, and a sample plan is presented in Section D.7.5.3 (p. D-94).

D.7.5.1 SMALL SITE ESC PLAN MAP

The Small Site ESC Plan includes information that is routinely collected for a **single family residence site plan or a short plat plot plan** already required to be submitted with a permit application. One copy of the site plan or plot plan shall be used to show how ESC measures are to be applied to the site to comply with the Small Site ESC requirements. The approximate location and size of clearing limits, rock construction entrance, flow paths, silt fences, etc., should be indicated on the Small Site ESC Plan. Any plan must contain at a minimum the features listed in Section D.7.5.2.

Single family residential projects that qualify for Small Site ESC requirements should use the Residential Site Plan (see DDES Bulletin No. 9, "Obtaining a Residential Building Permit") as the base map for the ESC plan.

Proposed short plats that qualify for Small Project Drainage Review should use the Small Project Drainage Plan (see *Small Project Drainage Requirements*, detached Appendix C of the *Surface Water Design Manual*) as a base plan for the ESC plan. All projects subject to Small Project Drainage Review are required to submit these plans and a drainage assessment. If engineering plans are required for a short plat application, they may be used as a base plan for Small Site ESC plans. How the ESC measures are to be applied on the site are added directly to the base map. For more complicated sites, an erosion control professional should be readily able to add Small Site ESC BMPs to the base map with minimal additional effort or expense.

DRAFT

The ESC plans for short plats usually apply only to the site development, since siting of homes on lots created by short plats is done after the short plat is approved (when the home applies for a residential building permit). It is the responsibility of the applicant for a proposed single family residence to show in detail how ESC requirements are met. The applicant is also responsible for Single family residential development is required to comply with the Stormwater Pollution Prevention Manual and KCC 9.12.

D.7.5.2 FEATURES REQUIRED ON SMALL SITE ESC PLANS

The Small Site ESC Plan should be drawn on 8-1/2" x 11", 8-1/2" x 14", or 11" x 17" paper (see the sample plan in Figure D.7.5.A, p. D-96), and must include the following information.

Identification

1. Name, address, and phone number of the applicant
2. Scale—use a scale that clearly illustrates drainage features and flow controls (1"=20' is standard engineering scale; minimum acceptable scale is 1"=50')
3. Parcel number
4. North arrow
5. Dimension of all property lines, easements, and building setback lines
6. Street names and existing or proposed property address

7. Section, township, and range of proposal.

Topography

1. Corner elevations
2. Benchmark (a permanent mark indicating elevation and serving as a reference in the topographic survey)
3. Datum (assumed datum is acceptable in many cases, i.e., fire hydrant base = 100'; datum for projects in or near FEMA floodplains should be NGVD 1929)
4. If over 15% slope: 5-foot contours, top of slope, toe of slope, and any erosion or landslide areas.

Proposed ESC

1. Delineation of proposed clearing limits
2. Type and location of erosion control facilities
3. Location of any significant offsite drainage features within 200 feet of the discharge point(s) for the lot, including streams, lakes, roadside ditches.

Topography/Drainage Features

1. Outline of any stream, wetland, lake, closed depression, or other water feature (including any required buffer width)
2. Location of all steep slopes, landslide hazard areas, and coal mine hazard areas (including buffers)
3. Location of all existing and proposed drainage easements, ditches, swales, pipes, etc.
4. Location of all critical areas as shown on any recorded critical areas notice on title.

DRAFT

D.7.5.3 SAMPLE SMALL SITE ESC PLAN

All sites are required to control erosion and contain sediment. The planning and use of ESC measures will be illustrated for a single family residence. Although the specifics of any lot will differ from those shown here, the process will be similar. The first step in the process is to determine whether the site is eligible to use the Small Site ESC requirements. This evaluation and the following materials are usually included in the drainage assessment that accompanies the Small Site ESC Plan.

The proposed house is to be placed on an existing 1.69-acre lot (see Figure D.7.5.A). Impervious surfaces are the roof, a driveway, and a parking area. The total proposed impervious surface is 6,950 square feet as determined from the residential site plan layout of residence and driveway (the site plan provides the base map for the Small Site ESC Plan). The amount exceeds 2,000 square feet but falls below the 10,000-square-foot limit for Small Project Drainage Review. Therefore, a Small Site ESC Plan is applicable.

The proposal is not in a basin plan area or critical drainage area that might contain clearing limits. However, a portion of a wetland and an erosion hazard area have been identified on the site, and their approximate locations are shown in Figure D.7.5.A. While neither the wetland and its buffer, nor the erosion hazard area would be disturbed during construction, the locations of these critical areas must be verified.

Approximately the southern 2/3 of the site will be cleared. Trees and other native vegetation will be left intact along the northern edge, near the street. Buffers will be maintained around the wetland and erosion hazard areas, respectively. The site slopes towards the street.

In order to prevent erosion and to encourage sedimentation, the following **BMPs** are used:

1. **Clearing will be minimized** to the extent possible, and **clearing limits will be marked** by fencing or other means on the ground.

2. Water will be **routed** around the erosion hazard area and around the steep section of the driveway by constructing an interceptor dike or ditch that will intersect and direct water away to the east of the site.
3. Water will be **filtered** before it reaches the wetland. Silt fencing or other perimeter protection will be placed along slope contours at the limits of clearing in the vicinity of both the wetland and the erosion hazard area.
4. A rocked construction entrance will be placed at the end of the driveway.
5. **Mulch** will be spread over all cleared areas of the site when they are not being worked. Mulch will consist of air-dried straw and chipped site vegetation. Other cover methods that prevent erosion may also be installed.

The BMPs shown in Figure D.7.5.A must be installed as clearing progresses. For example, the rock construction entrance must be installed as soon as the path for the driveway has been cleared. Additional ESC measures must be installed if the ones proposed above prove insufficient.

DRAFT

FIGURE D.7.5.A SAMPLE SMALL SITE ESC PLAN

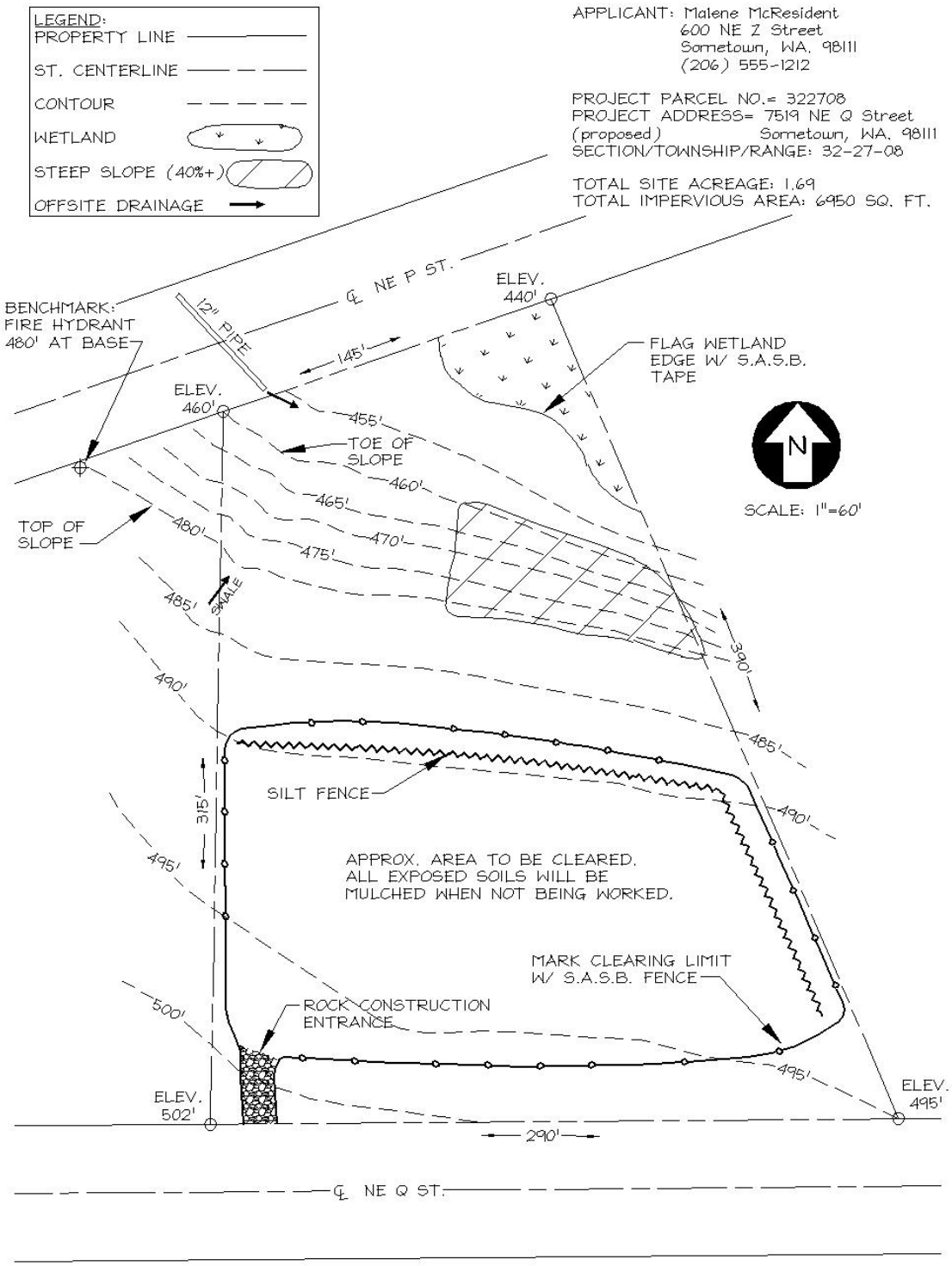

D.8 REFERENCE SECTION

This reference section provides materials useful in developing erosion and sediment control plans and for effectively implementing erosion control measures in the field. In order to make the Erosion and Sediment Control Standards a stand alone booklet, several key components relating to erosion and sediment control found in the *Surface Water Design Manual* are repeated in this section.

1. ESC maintenance report
2. Standard ESC plan notes
3. Recommended construction sequence
4. References.

D.8.1 ESC MAINTENANCE REPORT

DDES may require a written record of all maintenance activities to be kept to demonstrate compliance with the Maintenance Requirements (Section D.5.4). A standard ESC Maintenance Report is provided on the next page. Copies of the ESC Maintenance Report must be kept on site throughout the duration of construction.

DRAFT

ESC MAINTENANCE REPORT

Performed By: _____
Date: _____
Project Name: _____
DDES Permit #: _____

Clearing Limits

Damage	OK ____	Problem
Visible	OK ____	Problem
Intrusions	OK ____	Problem
Other	OK ____	Problem

Mulch

Rills/Gullies	OK ____	Problem
Thickness	OK ____	Problem
Other	OK ____	Problem

Nets/Blankets

Rills/Gullies	OK ____	Problem
Ground Contact	OK ____	Problem
Other	OK ____	Problem

Plastic

Tears/Gaps	OK ____	Problem
Other	OK ____	Problem

Seeding

Percent Cover	OK ____	Problem
Rills/Gullies	OK ____	Problem
Mulch	OK ____	Problem
Other	OK ____	Problem

Sodding

Grass Health	OK ____	Problem
Rills/Gullies	OK ____	Problem
Other	OK ____	Problem

Perimeter Protection including Silt Fence

Damage	OK ____	Problem
Sediment Build-up	OK ____	Problem
Concentrated Flow	OK ____	Problem
Other	OK ____	Problem

Brush Barrier

Damage	OK ____	Problem
Sediment Build-up	OK ____	Problem
Concentrated Flow	OK ____	Problem
Other	OK ____	Problem

Vegetated Strip

Damage	OK ____	Problem
Sediment Build-up	OK ____	Problem
Concentrated Flow	OK ____	Problem
Other	OK ____	Problem

Construction Entrance

Dimensions	OK ____	Problem
Sediment Tracking	OK ____	Problem
Vehicle Avoidance	OK ____	Problem
Other	OK ____	Problem

Wheel Wash

Dimensions	OK	Problem
Sed build up or tracking	OK…….	Problem
Other	OK	Problem

Construction Road

Stable Driving Surf.	OK ____	Problem
Vehicle Avoidance	OK ____	Problem
Other	OK ____	Problem

Sediment Trap/Pond

DRAFT

Sed. Accumulation	OK ____	Problem
Overtopping	OK ____	Problem
Inlet/Outlet Erosion	OK ____	Problem
Other	OK ____	Problem

Catch Basin/Inlet Protection

Sed. Accumulation	OK ____	Problem
Damage	OK ____	Problem
Clogged Filter	OK ____	Problem
Other	OK ____	Problem

Interceptor Dike/Swale

Damage	OK ____	Problem
Sed. Accumulation	OK ____	Problem
Overtopping	OK ____	Problem
Other	OK ____	Problem

Pipe Slope Drain

Damage	OK ____	Problem
Inlet/Outlet	OK ____	Problem
Secure Fittings	OK ____	Problem
Other	OK ____	Problem

Ditches

Damage	OK ____	Problem
Sed. Accumulation	OK ____	Problem
Overtopping	OK ____	Problem
Other	OK ____	Problem

Outlet Protection

Scour	OK ____	Problem
Other	OK ____	Problem

Level Spreader

Damage	OK ____	Problem
Concentrated Flow	OK ____	Problem
Rills/Gullies	OK ____	Problem
Sed. Accumulation	OK ____	Problem
Other	OK ____	Problem

Dewatering Controls

Sediment	OK..	Problem

Dust Control

Palliative applied	OK	Problem

Miscellaneous

Wet Season Stockpile	OK ____	Problem
Other	OK ____	Problem

Comments:

Actions Taken:

Problems Unresolved:

DRAFT

D.8.2 STANDARD ESC PLAN NOTES

The standard ESC plan notes must be included on all ESC plans. At the applicant's discretion, notes that in no way apply to the project may be omitted; however, the remaining notes must not be renumbered. For example, if ESC Note #3 were omitted, the remaining notes should be numbered 1, 2, 4, 5, 6, etc.

1. Approval of this erosion and sedimentation control (ESC) plan does not constitute an approval of permanent road or drainage design (e.g., size and location of roads, pipes, restrictors, channels, retention facilities, utilities, etc.).
2. The implementation of these ESC plans and the construction, maintenance, replacement, and upgrading of these ESC facilities is the responsibility of the applicant/ESC supervisor until all construction is approved.
3. The boundaries of the clearing limits shown on this plan shall be clearly flagged by survey tape or fencing, if required, prior to construction (SWDM Appendix D). During the construction period, no disturbance beyond the clearing limits shall be permitted. The clearing limits shall be maintained by the applicant/ESC supervisor for the duration of construction.
4. Stabilized construction entrances shall be installed at the beginning of construction and maintained for the duration of the project. Additional measures, such as constructed wheel wash systems or wash pads, may be required t ensure that all paved areas are kept clean and track out to road right of way does not occur for the duration of the project.
5. The ESC facilities shown on this plan must be constructed prior to or in conjunction with all clearing and grading so as to ensure that the transport of sediment to surface waters, drainage systems, and adjacent properties is minimized.
6. The ESC facilities shown on this plan are the minimum requirements for anticipated site conditions. During the construction period, these ESC facilities shall be upgraded as needed for unexpected storm events and modified to account for changing site conditions (e.g. additional cover measures, additional sump pumps, relocation of ditches and silt fences, perimeter protection etc.) as directed by King County.
7. The ESC facilities shall be inspected daily by the applicant/ESC supervisor and maintained to ensure continued proper functioning. Written records shall be kept of weekly reviews of the ESC facilities.
8. Any areas of exposed soils, including roadway embankments, that will not be disturbed for two consecutive days during the wet season or seven days during the dry season shall be immediately stabilized with the approved ESC methods (e.g., seeding, mulching, plastic covering, etc.).
9. Any area needing ESC measures that do not require immediate attention shall be addressed within seven (7) days.
10. The ESC facilities on inactive sites shall be inspected and maintained a minimum of once a month during the dry season, bi-monthly during the wet season, or within twenty four (24) hours following a storm event.
11. At no time shall more than one (1) foot of sediment be allowed to accumulate within a catch basin. All catch basins and conveyance lines shall be cleaned prior to paving. The cleaning operation shall not flush sediment-laden water into the downstream system.
12. Any permanent retention/detention facility used as a temporary settling basin shall be modified with the necessary erosion control measures and shall provide adequate storage capacity. If the facility is to function ultimately as an infiltration system, the temporary facility must be rough graded so that the bottom and sides are at least three feet above the final grade of the permanent facility.
13. Cover measures will be applied in conformance with Appendix D of the Surface Water Design Manual.

DRAFT

14. Prior to the beginning of the wet season (Oct. 1), all disturbed areas shall be reviewed to identify which ones can be seeded in preparation for the winter rains. Disturbed areas shall be seeded within one week of the beginning of the wet season. A sketch map of those areas to be seeded and those areas to remain uncovered shall be submitted to the DDES inspector.

D.8.3 RECOMMENDED CONSTRUCTION SEQUENCE

A detailed construction sequence is needed to ensure that erosion and sediment control measures are applied at the appropriate times. A recommended construction sequence is provided below:

1. Hold the pre-construction meeting.
2. Post sign with name and phone number of ESC supervisor (may be consolidated with the required notice of construction sign).
3. Flag or fence clearing limits.
4. Install catch basin protection, if required.
5. Grade and install construction entrance(s).
6. Install perimeter protection (silt fence, brush barrier, etc.).
7. Construct sediment ponds and traps.
8. Grade and stabilize construction roads.
9. Construct surface water controls (interceptor dikes, pipe slope drains, etc.) simultaneously with clearing and grading for project development.
10. Maintain erosion control measures in accordance with King County standards and manufacturer's recommendations.
11. Relocate erosion control measures, or install new measures so that as site conditions change, the erosion and sediment control is always in accordance with the *King County Erosion and Sediment Control Standards*.
12. Cover all areas that will be unworked for more than seven days during the dry season or two days during the wet season with straw, wood fiber mulch, compost, plastic sheeting, or equivalent.
13. Stabilize all areas within seven days of reaching final grade.
14. Seed, sod, stabilize, or cover any areas to remain unworked for more than 30 days.
15. Upon completion of the project, stabilize all disturbed areas and remove BMPs if appropriate.

DRAFT

D.8.4 REFERENCES

Goldman, S.J., Jackson, K., and Bursztynsky, T.A. 1986. Erosion and Sediment Control Handbook. McGraw-Hill Book Company, New York, New York.

King County Dept. of Public Works. 1993. Guidelines for Bank Stabilization Projects. Surface Water Management Division, Seattle, Wash.

Metropolitan Washington Council of Governments. 1990. Performance of Current Sediment Control Measures at Maryland Construction Sites. Washington, D.C. Prepared by T.R. Schueler and J. Lugbill.

Horner, R.R., Guedry, J., and Kortenhof, M.H. 1990. Highway Construction Site Erosion and Pollution Control Manual. Washington State Transportation Center, Seattle, Wash. and Washington State Dept. of Transportation, Olympia, Wash. Report No. WA-RD 200.2.

REFERENCE

KING COUNTY, WASHINGTON
SURFACE WATER DESIGN MANUAL

DRAFT

Note:

Although some of the materials in this Reference section may have been adopted by administrative rule or by ordinance, the administrative rule that adopted the Surface Water Design Manual has not formally adopted any of the materials in this section. All of the papers, forms, notes, equations, symbols, maps and other materials herein are for reference only.

King County assumes no responsibility for the completeness or current status of the materials contained in this section. It is the sole responsibility of each applicant to insure that the most current materials are used in preparing a permit application for their proposed project. Copies of these materials are available from DNRP or DDES, or may be downloaded from the King County Water and Land Resources Division "Surface Water Design Manual Website."

1 KCC 9.04 – Surface Water Runoff Policy

2 Adopted Critical Drainage Areas

3 Other Adopted Area Specific Drainage Requirements

- A RA Zone Clearing Restrictions

4 Other Drainage Related Regulations and Guidelines

- A Grading Code Soil Amendment Standard
- B Clearing & Grading Seasonal Limitations
- C Landscape Management Plan Guidelines
- D Shared Facility Maintenance Responsibility Guidance

5 Wetland Hydrology Protection Guidelines

6 Hydrologic/Hydraulic Design Methods

- A Infiltration Rate Test
- B Pond Geometry Equations

7 Engineering Plan Support

- A King County Standard Map Symbols
- B Standard Plan Notes and Example Construction Sequence

8 Forms and Worksheets

- A Technical Information Report (TIR) Worksheet
- B Offsite Analysis Drainage System Table
- C Water Quality Facility Sizing Worksheets
- D Flow Control and Water Quality Facility Summary Sheet and Sketch
- E CSWPPP Worksheet Forms
- F Adjustment Application Form and Process Guidelines
- G Dedication and Indemnification Clause - Final Recording
- H Bond Quantities Worksheet
- I Maintenance and Defect Agreement
- J Drainage Facility Covenant
- K Drainage Release Covenant
- L Drainage Easement
- M Flow Control BMP Covenant
- N Impervious Surface Limit Covenant
- O Clearing Limit Covenant
- P River Protection Easement

9 Interim Changes to Requirements

- A Blanket Adjustments
- B Administrative Changes

KING COUNTY, WASHINGTON
SURFACE WATER DESIGN MANUAL

REFERENCE 1

KING COUNTY CODE CHAPTER 9.04 SURFACE WATER RUNOFF POLICY

DRAFT

KING COUNTY

1200 King County Courthouse
516 Third Avenue
Seattle, WA 98104

Signature Report

January 20, 2005

Ordinance 15052

Proposed No. 2004-0123.3 **Sponsors** Constantine

AN ORDINANCE related to surface water; amending Ordinance 9163, Section 2, as amended, and K.C.C. 9.04.020, Ordinance 9163, Section 3, as amended, and K.C.C. 9.04.030, Ordinance 2281, Section 5, as amended, and K.C.C. 9.04.050, Ordinance 2281, Section 6, as amended, and K.C.C. 9.04.070, Ordinance 4938, Section 7, as amended, and K.C.C. 9.04.090, Ordinance 10636, Section 3, as amended, and K.C.C. 9.12.015, Ordinance 10636, Section 4, as amended, and K.C.C. 9.12.025 and Ordinance 10636, Section 5, as amended, and K.C.C. 9.12.035 and adding a new section to K.C.C. chapter 9.04.

DRAFT

BE IT ORDAINED BY THE COUNCIL OF KING COUNTY:

SECTION 1. Ordinance 9163, Section 2, as amended, and K.C.C. 9.04.020 are each hereby amended to read as follows:

Definitions. The definitions in this section apply throughout this chapter unless the context clearly requires otherwise.

A. "Adjustment" means a department-approved variation in the application of the requirements of K.C.C. 9.04.050 and the Surface Water Design Manual to a particular project in accordance with K.C.C. 9.04.050C. Adjustment" replaces "variance," which was used in prior editions of the Surface Water Design Manual.

B. "Applicant" means a property owner or a public agency or public or private utility that owns a right-of-way or other easement or has been adjudicated the right to such an easement under RCW 8.12.090, or any person or entity designated or named in writing by the property or easement owner to be the applicant, in an application for a development proposal, permit or approval.

C. "Basin" means a geographic area that contains and drains to a stream or river named and noted on common maps, such as the Cedar river, Sammamish river, Green river, Snoqualmie river, Skykomish river or White river, or a geographic area that drains to a nonflowing water body named and noted on common maps, such as Lake Washington or Puget Sound.

D. "Basin plan" means a plan and all implementing regulations and procedures including, but not limited to, capital projects, public education activities and land use management adopted by ordinance for managing surface and storm water within the basin.

E. "Closed depression" means an area greater than five thousand square feet at overflow elevation that is low-lying and that has no or such a limited surface water outlet that the area acts as a stormwater retention facility.

DRAFT

F. "Construct or modify" means to install a new drainage pipe or ditch or make improvements to an existing drainage pipe or ditch, for purposes other than maintenance, that either serves to concentrate previously unconcentrated surface and storm water runoff or serves to increase, decrease or redirect the conveyance of surface and storm water runoff. "Construct or modify" does not include installation or maintenance of a driveway culvert installed as part of a single-family residential building permit.

G. "Conveyance system" means the drainage facilities and features, both natural and constructed, that collect, contain and provide for the flow of surface and storm water from the highest points on the land down to a receiving water. The natural elements of the conveyance system include swales and small drainage courses, streams, rivers, lakes and wetlands. The constructed elements of the conveyance system include gutters, ditches, pipes, channels and most flow control and water quality treatment facilities.

H. "Department" means the department of natural resources and parks or its successor.

I. "Development" means any activity that requires a permit or approval, including, but not limited to, a building permit, grading permit, shoreline substantial development permit, conditional use permit, special use permit, zoning variance or reclassification, subdivision, short subdivision, urban planned development, binding site plan, site development permit or right-of-way use permit. "Development" does not include a Class I, II, III or IV-S forest practice conducted in accordance with chapter 76.09 RCW and Title 222 WAC or a class IV-G nonconversion forest practice, as defined in K.C.C. chapter 21A.06, conducted in accordance with chapter 76.09 RCW and Title 222 WAC and a county-approved forest management plan.

DRAFT

J. "Director" means the director of the department of natural resources and parks, or any duly authorized representative of the director.

K. "Drainage" means the collection, conveyance, containment or discharge, or any combination thereof, of surface and storm water runoff.

L. "Drainage facility" means a constructed or engineered feature that collects, conveys, stores or treats surface and storm water runoff. "Drainage facility" includes, but is not limited to, a constructed or engineered stream, pipeline, channel, ditch, gutter, lake, wetland, closed depression, flow control or water quality treatment facility, erosion and sediment control facility and other structure and appurtenance that provides for drainage.

M. "Drainage review" means an evaluation by King County staff of a proposed project's compliance with the drainage requirements in the Surface Water Design Manual. The types of drainage review include: small project drainage review, targeted drainage review, full drainage review and large project drainage review.

DRAFT

N. "Erosion and sediment control" means any temporary or permanent measures taken to reduce erosion, control siltation and sedimentation and ensure that sediment-laden water does not leave the site or enter into wetlands or aquatic areas.

O. "Financial guarantee" means a form of financial security posted to do one or more of the following: ensure timely and proper completion of improvements; ensure compliance with the King County Code; or provide secured warranty of materials, workmanship of improvements and design. "Financial guarantees" include assignments of funds, cash deposit, surety bonds or other forms of financial security acceptable to the director of the department of development and environmental services. "Performance

guarantee," "maintenance guarantee" and "defect guarantee" are considered subcategories of financial guarantee.

P. "Flood hazard reduction plan" means a plan and all implementing programs, regulations and procedures including, but not limited to, capital projects, public education activities and enforcement programs for reduction of flood hazards and prepared in accordance with RCW 86.12.200.

Q. "Flow control best management practice" means a method or design for dispersing, infiltrating or otherwise reducing or preventing development-related increases in surface and storm water runoff at, or near, the sources of those increases. "Flow control best management practice" includes the methods and designs specified in the Surface Water Design Manual.

R. "Flow control facility" means a drainage facility designed to mitigate the impacts of increased surface and storm water runoff generated by site development in accordance with the drainage requirements in this chapter. A "flow control facility" is designed either to hold water for a considerable length of time and then release it by evaporation, plant transpiration or infiltration into the ground or to hold runoff for a short period of time and then release it to the conveyance system.

S. "Full drainage review" means the evaluation required by K.C.C. 9.04.030 for any proposed project, unless the project is subject to small project drainage review, targeted drainage review or large project drainage review, that:

1. Would result in two thousand square feet or more of new impervious surface;

2. Would result in thirty-five thousand square feet or more of new pervious surface; or

DRAFT

3. Is a redevelopment project on one or more parcels where the total of new and replaced impervious surface is five thousand square feet or more and when the valuation of proposed improvements exceeds fifty percent of the assessed value of the existing site improvements, including interior improvements and excluding required mitigation and frontage improvements.

T. "High-use site" means a commercial, industrial or road intersection site that generates a higher than average number of vehicle turnovers or has other characteristics that generate the potential for chronic oil accumulation. "High use site" includes:

1. A commercial or industrial site subject to:

a. an expected daily traffic count greater than one hundred vehicles per one thousand square feet of gross building area;

b. petroleum storage or transfer in excess of one thousand gallons per year, not including routine fuel oil storage or transfer; or

c. use, storage or maintenance of a fleet of twenty-five or more diesel vehicles each weighing over ten tons; or

2. A road intersection with average daily traffic counts of twenty-five thousand vehicles or more on the main roadway and fifteen thousand or more vehicles on any intersecting roadway, excluding pedestrian or bicycle use improvement projects.

U. "Hydraulically connected" means connected through surface flow or water features such as wetlands or lakes.

V. "Impervious surface" means a hard surface area that either prevents or retards the entry of water into the soil mantle as under natural conditions before development or that causes water to run off the surface in greater quantities or at an increased rate of flow

DRAFT

from the flow present under natural conditions prior to development. Common impervious surfaces include, but are not limited to, roofs, walkways, patios, driveways, parking lots, storage areas, areas that are paved, graveled or made of packed or oiled earthen materials or other surfaces that similarly impede the natural infiltration of surface and storm water. An open uncovered flow control or water quality treatment facility is not an "impervious surface."

W. "Improvement" means a permanent, human-made, physical change to land or real property including, but not limited to, buildings, streets, driveways, sidewalks, crosswalks, parking lots, water mains, sanitary and storm sewers, drainage facilities and landscaping.

X. "Land disturbing activity" means an activity that results in a change in the existing soil cover, both vegetative and nonvegetative, or to the existing soil topography. "Land disturbing activity" includes, but is not limited to, demolition, construction, clearing, grading, filling, excavation and compaction. "Land disturbing activity" does not include tilling conducted as part of agricultural practices, landscape maintenance or gardening.

DRAFT

Y. "Lake management plan" means a plan describing the lake management recommendations and requirements adopted by public rule for managing water quality within individual lake basins.

Z. "Large project drainage review" means the evaluation required by K.C.C. 9.04.030 for any proposed project that:

1. Has an urban plan development land use designation in the King County Comprehensive Plan land use map;

2. Would, at full buildout of the project site, result in fifty acres or more of new impervious surface within a drainage subbasin or a number of subbasins hydraulically connected across subbasin boundaries; or

3. Has a project site of fifty acres or more within a critical aquifer recharge area, as defined in K.C.C. Title 21A.

AA. "Licensed civil engineer" means a person registered with the state of Washington as a professional engineer in civil engineering.

BB. "Maintenance" means those usual activities taken to prevent a decline, lapse or cessation in the use of currently serviceable structures, facilities, equipment or systems, if there is no expansion of the structure, facilities, equipment or system and there are no significant hydrologic impacts. "Maintenance" includes the repair or replacement of nonfunctional facilities or the replacement of existing structures with different types of structures, if the repair or replacement is required by one or more environmental permits or to meet current engineering standards and the functioning characteristics of the original facility or structure are not changed.

DRAFT

CC. "Master drainage plan" means a comprehensive drainage control plan intended to prevent significant adverse impacts to the natural and constructed drainage system, both on- and off-site.

DD.1. "Native vegetated surface" means a surface in which the soil conditions, ground cover and species of vegetation are like those of the original native condition for the site, as more specifically set forth in the Surface Water Design Manual.

EE. "Natural discharge location" means the location where runoff leaves the project site under existing site conditions as defined in the Surface Water Design Manual.

FF. "New impervious surface" means the creation of a hard or compacted surface such as roofs, pavement, gravel or dirt or the addition of a more compacted surface such as the paving of existing dirt or gravel.

GG. "New pervious surface" means the conversion of a native vegetated surface or other native surface to a nonnative pervious surface, including, but not limited to, pasture land, grassland, cultivated land, lawn, landscaping or bare soil or any alteration of existing nonnative pervious surface that results in increased surface and storm water runoff as defined in the Surface Water Design Manual.

HH. "Pollution-generating impervious surface" means an impervious surface considered to be a significant source of pollutants in surface and storm water runoff. "Pollution-generating impervious surface includes those surfaces subject to vehicular use or storage of erodible or leachable materials, wastes or chemicals and that receive direct rainfall or the run-on or blow-in of rainfall. A covered parking area would be included if runoff from uphill could regularly run through it or if rainfall could regularly blow in and wet the pavement surface. Metal roofs are also considered pollution-generating impervious surface unless they are treated to prevent leaching.

II. "Pollution-generating pervious surface" means a nonimpervious surface considered to be a significant source of pollutants in surface and storm water runoff. "Pollution-generating pervious surfaces" include surfaces subject to the use of pesticides and fertilizers, to the use or storage of erodible or leachable materials, wastes or chemicals or to the loss of soil. "Pollution-generating pervious surface includes, but not limited to, the lawn and landscaped areas of a residential or commercial site, golf course, park, sports field and county-standard grassed modular grid pavement.

DRAFT

JJ. "Project" means any proposed action to alter or develop a site that may also require drainage review.

KK. "Project site" means the portion of a site and any offsite areas subject to proposed project activities, alterations and improvements including those required by this chapter.

LL. "Redevelopment project" means a project that proposes to add, replace or modify impervious surface for purposes other than a residential subdivision or maintenance on a site that:

1. Is already substantially developed in a manner that is consistent with its current zoning or with a legal nonconforming use; or

2. Has an existing impervious surface coverage of thirty-five percent or more.

MM. "Replaced impervious surface" means an existing impervious surface proposed to be removed and reestablished as impervious surface, excluding impervious surface removed for the sole purpose of installing utilities or performing maintenance. For purposes of this definition, "removed" includes the removal of buildings down to bare soil or the removal of Portland cement concrete slabs or pavement or asphaltic concrete pavement together with any asphalt-treated base.

NN. "Runoff" means that portion of water originating from rainfall and other precipitation that flows over the surface or just below the surface from where it fell and is found in drainage facilities, rivers, streams, springs, seeps, ponds, lakes, wetlands and shallow groundwater as well as on ground surfaces. For the purpose of this definition, groundwater means all waters that exist beneath the land surface or beneath the bed of any stream, lake or reservoir, or other body of surface water, whatever may be the

DRAFT

222 geological formation or structure in which such water stands or flows, percolates or
223 otherwise moves.
224 OO. "Salmon conservation plan" means a plan and all implementing regulations
225 and procedures including, but not limited to, land use management adopted by ordinance,
226 capital projects, public education activities and enforcement programs for conservation and
227 recovery of salmon within a water resource inventory area designated by the state under
228 WAC 173-500-040.
229 PP. "Shared facility" means a drainage facility designed to meet one or more of the
230 requirements of K.C.C. 9.04.050 for two or more separate projects contained within a
231 basin. Shared facilities usually include shared financial commitments for those drainage
232 facilities.
233 QQ. "Site" means a single parcel, or two or more contiguous parcels that are under
234 common ownership or documented legal control, used as a single parcel for a proposed
235 project for purposes of applying for authority from King County to carry out a proposed
236 project. For projects located primarily within dedicated rights-of-way, "site" includes the
237 entire width of right-of-way subject to improvements proposed by the project.
238 RR. "Small project drainage review" means the drainage review for a proposed
239 single-family residential project or agricultural project that :
240 1. Would result in:
241 a. ten thousand square feet or less of total impervious surface added on or after
242 January 8, 2001; or
243 b. four percent or less of total impervious surface on a site as specified in the
244 Surface Water Design Manual; and

DRAFT

2. Meets the small project drainage requirements specified in the Surface Water Design Manual, including flow control best management practices, erosion and sediment control measures and drainage plan submittal requirements; and

3. Limits new pervious surface as specified in the Surface Water Design Manual.

SS. "Stormwater compliance plan" means a plan or study and all regulations and procedures that have been adopted by the county to implement the plan or study, including, but not limited to, capital projects, public education activities and enforcement programs for managing stormwater quantity and quality discharged from the county's municipal separate storm sewer system in compliance with the National Pollutant Discharge Elimination System permit program under the Clean Water Act.

TT. "Subbasin" means a geographic area that:

1. Drains to a stream or water body named and noted on common maps; and

2. Is contained within the basin of the stream or water body.

UU. "Surface and storm water" means water originating from rainfall and other precipitation that is found on ground surfaces and in drainage facilities, rivers, streams, springs, seeps, ponds, lakes, wetlands and shallow ground water.

VV. "Surface Water Design Manual" means the manual, and supporting documentation referenced or incorporated in the manual, describing surface and storm water design and analysis requirements, procedures and guidance that has been formally adopted by rule under the procedures in K.C.C. chapter 2.98. The Surface Water Design Manual is available from the department of development and environmental services or the department of natural resources and parks, water and land resources division, or their successor agencies.

DRAFT

WW. "Targeted drainage review" means an abbreviated evaluation required by K.C.C. 9.04.030 for certain types of proposed projects that are not subject to full or large project drainage review. Targeted drainage review may be required for some projects in small project drainage review.

XX. "Water quality treatment facility" means a drainage facility designed to reduce pollutants once they are already contained in surface and storm water runoff. A water quality treatment facility is the structural component of best management practices. When used singly or in combination, a water quality treatment facility reduces the potential for contamination of both surface and ground waters.

SECTION 2. Ordinance 9163, Section 3, as amended, and K.C.C. 9.04.030 are each hereby amended to read as follows:

Drainage review – when required – type.

A. Drainage review is required when any proposed project is subject to a King County development permit or approval and:

1. Would result in two thousand square feet or more of new impervious surface;

2. Would involve seven thousand square feet or more of land disturbing activity;

3. Would construct or modify a drainage pipe or ditch that is twelve inches or more in size or depth or receives surface and storm water runoff from a drainage pipe or ditch that is twelve inches or more in size or depth;

4. Contains or is adjacent to a flood hazard area as defined in K.C.C. chapter 21A.24;

5. Is located within a critical drainage area;

DRAFT

6. Is a redevelopment project proposing one hundred thousand dollars or more of improvements to an existing high-use site; or

7. Is a redevelopment project on a site in which the total of new plus replaced impervious surface is five thousand square feet or more and whose valuation of proposed improvements, including interior improvements and excluding required mitigation and frontage improvements, exceeds fifty percent of the assessed value of the existing site improvements.

B. The drainage review for any proposed project shall be scaled to the scope of the project's size, type of development and potential for impacts to the regional surface water system to facilitate preparation and review of project applications. If drainage review for a proposed project is required under subsection A. of this section, the department of development and environmental services shall determine which of the following drainage reviews apply as specified in the Surface Water Design Manual:

1. Small project drainage review;

2. Targeted drainage review;

3. Full drainage review; or

4. Large project drainage review.

SECTION 3. Ordinance 2281, Section 5, as amended, and K.C.C. 9.04.050 are each hereby amended to read as follows:

Drainage review – requirements.

A. A proposed project required to have drainage review by K.C.C. 9.04.030 must meet each of the following core requirements, which are described in detail in the Surface Water Design Manual. Projects subject only to small project drainage review that meet

DRAFT

the small project drainage requirements specified in the Surface Water Design Manual, including flow control best management practices, erosion and sediment control measures and drainage plan submittal requirements are deemed to comply with the following core requirements:

1. Core requirement 1: Discharge at the natural location. All surface and storm water runoff from a project shall be discharged at the natural location so as not to be diverted onto, or away from, downstream properties. The manner in which runoff is discharged from the project site shall not create a significant adverse impact to downhill properties or drainage systems as specified in the discharge requirements of the Surface Water Design Manual;

2. Core requirement 2: Offsite analysis. The initial application submittal for proposed projects shall include an offsite analysis report that assesses potential offsite drainage impacts associated with development of the proposed site and proposes appropriate mitigations to those impacts. This initial submittal shall include, at minimum, a Level One downstream analysis as described in the Surface Water Design Manual. If impacts are identified, the proposed projects shall meet any applicable problem-specific requirements as specified in the Surface Water Design Manual;

3. Core Requirement 3: Flow control. Proposed projects that would result in two thousand square feet or more of new impervious surface or thirty-five thousand square feet or more of new pervious surface, or that are redevelopment projects that would result in a total of five thousand square feet or more of new and replaced impervious surface, shall provide flow control facilities or flow control BMPs, or both, to control surface and storm water runoff generated by-new impervious surface, new

DRAFT

pervious surface, replaced impervious surface and any existing impervious surface added on or after January 8, 2001, as specified in the Surface Water Design Manual. Flow control facilities shall meet the area-specific flow control facility requirements and the flow control facility implementation requirements applicable to the project site as specified in the Surface Water Design Manual. Flow control BMPs shall also be applied as specified in the Surface Water Design Manual. Projects subject to area-specific flow control facility requirements shall meet one of the flow control facility performance criteria listed in a. through c. of this subsection A.3., as directed by the Surface Water Design Manual:

a. Level One shall match the predeveloped site's peak discharge rates for the two-year and ten-year return periods;

b. Level Two shall meet Level One criteria and also match the predeveloped site's discharge durations for the predeveloped peak discharge rates between the fifty percent of the two-year peak flow through the fifty-year peak flow; or

c. Level Three shall meet Level Two criteria and also match the predeveloped site's peak discharge rate for the one hundred-year return period;

4. Core requirement 4: Conveyance system. All engineered conveyance system elements for proposed projects shall be analyzed, designed and constructed to provide the minimum level of protection against overtopping, flooding, erosion and structural failure as specified by the conveyance requirements for new and existing systems and conveyance implementation requirements described in the Surface Water Design Manual;

5. Core requirement 5: Erosion and sediment control. All proposed projects that will clear, grade or otherwise disturb the site shall provide erosion and sediment

DRAFT

control that prevents, to the maximum extent practicable, the transport of sediment from the site to drainage facilities, water resources and adjacent properties. Erosion and sediment controls shall be applied in accordance with K.C.C. chapter 16.82 as specified by the temporary erosion and sediment control measures and performance criteria and implementation requirements in the King County Surface Water Design Manual;

6. Core requirement 6: Maintenance and operation. Maintenance of all drainage facilities in compliance with King County maintenance standards is the responsibility of the applicant or property owner as described in the Surface Water Design Manual, except those facilities for which King County assumes maintenance and operation as described in K.C.C. 9.04.115 and 9.04.120 and the Surface Water Design Manual;

7. Core requirement 7: Financial guarantees and liability. All drainage facilities constructed or modified for projects, except downspout infiltration and dispersion systems for single family residential lots, must comply with the liability requirements of K.C.C. 9.04.100 and the financial guarantee requirements of K.C.C. Title 27A; and

8. Core requirement 8: Water quality. Proposed projects that would result in five thousand square feet or more of new pollution generating impervious surface or thirty-five thousand square feet or more of new pollution-generating pervious surface, or that are redevelopment projects that would result in a total of five thousand square feet or more of new and replaced pollution-generating impervious surface, shall provide water quality treatment facilities to treat polluted surface and storm water runoff generated by new or replaced pollution-generating impervious surface, new pollution-generating

DRAFT

pervious surface and any existing pollution-generating impervious surface added on or after January 8, 2001, as specified in the Surface Water Design Manual. However, pervious surfaces are specifically excluded if there is a good faith agreement with the King Conservation District to implement a farm management plan for agricultural uses, and pervious areas for other uses are specifically excluded if King County department of development and environmental services approves a landscape management plan that controls pesticides and fertilizers leaving the site. Water quality treatment facilities shall meet the area-specific water quality treatment requirements and the water quality implementation requirements applicable to the project site as specified in the Surface Water Design Manual. The facilities specified by these requirements are designed to reduce pollutant loads according to the applicable annual average performance goals listed in a. through d. of this subsection A.8. for ninety-five percent of the annual average runoff volume:

a. for basic water quality: remove eighty percent of the total suspended solids;

b. for enhanced basic water quality: remove fifty percent of the total zinc;

c. for sensitive lake protection: remove fifty percent of the total phosphorus; and

d. sphagnum bog protection: remove fifty percent of the total phosphorus and forty percent of the total nitrate plus nitrite. The discharge shall maintain a pH of less than 6.5 and an alkalinity of less than ten milligrams per liter.

B. A proposed project required by K.C.C. 9.04.030 to have drainage review shall meet any of the following special requirements, which apply to the site and which are described in detail in the Surface Water Design Manual. The department of development

DRAFT

and environmental services shall verify if a proposed project is subject to and must meet any of the following special requirements.

1. Special Requirement 1: Other adopted area-specific requirements. If a proposed project is in a designated critical drainage area, or is in an area included in an adopted master drainage plan, basin plan, salmon conservation plan, stormwater compliance plan, flood hazard reduction plan, lake management plan or shared facility plan, then the proposed project shall meet the applicable drainage requirements of the critical drainage area, master drainage plan, basin plan, salmon conservation plan, stormwater compliance plan, flood hazard reduction plan, lake management plan or shared facility plan;

2. Special Requirement 2: Floodplain/floodway delineation. If a proposed project contains or is adjacent to a stream, lake, wetland or closed depression, or if other King County regulations require study of flood hazards relating to the proposed project, the one hundred year floodplain boundaries and floodway shall be determined and delineated on the site improvement plans and profiles and any final maps prepared for the proposed project. The flood hazard study shall be prepared for as specified in the Surface Water Design Manual;

3. Special Requirement 3: Flood protection facilities. If a proposed project contains or is adjacent to a stream that has an existing flood protection facility, such as a levee, revetment or berm, or proposes to either construct a new or modify an existing flood protection facility, then the flood protection facilities shall be analyzed and designed as specified in the Surface Water Design Manual to conform with the Federal Emergency Management Agency regulations as found in 44 C.F.R.;

DRAFT

4. Special Requirement 4: Source Control. If a proposed project requires a commercial building or commercial site development permit, then water quality source controls shall be applied to prevent rainfall and runoff from coming into contact with pollutants to the maximum extent practicable. Water quality source controls shall be applied in accordance with K.C.C. chapter 9.12, the King County stormwater pollution prevention manual and the Surface Water Design Manual. All structural source controls shall be identified on the site improvement plans and profiles or final maps prepared for the proposed project; and

5. Special Requirement 5: Oil control. If a proposed project is a high-use site or is a redevelopment project proposing one hundred thousand dollars or more of improvements to an existing high-use site, then oil control shall be applied to all runoff from the high-use portion of the site as specified in the Surface Water Design Manual.

C. 1. An adjustment to the requirements contained in this section or other requirements in the Surface Water Design Manual may be proposed. The resulting development shall be subject to all of the remaining terms and conditions of this chapter and the adjustment shall:

a. produce a compensating or comparable result in the public interest, and

b. meet this chapter's objectives of safety, function, appearance, environmental protection and maintainability based upon sound engineering judgment.

2. If complying with subsection C.1.a. of this section will deny all reasonable use of a property, the best practicable alternative shall be obtained as determined by the director of the department of development and environmental services according to the adjustment process defined in the Surface Water Design Manual.

DRAFT

3. Requests for adjustments that may conflict with the requirements of any other King County division shall require review and concurrence with that division.

4. A request for an adjustment is a Type 1 land use decision as provided for in K.C.C. 20.20.060 and shall be processed in accordance with the procedures specified in the Surface Water Design Manual.

5. The county may require monitoring of experimental designs and technology or untested applications proposed by the applicant in order to determine compliance with subsection C.1. of this section and the approved plans and conditions.

6. The applicant may appeal an adjustment decision by following the appeal procedures as specified in the Surface Water Design Manual.

SECTION 4. Ordinance 2281, Section 6, as amended, and K.C.C. 9.04.070 are each hereby amended to read as follows:

Engineering plans for the purposes of drainage review.

A. 1. All engineering plans shall be submitted to the department of development and environmental services for review in accordance with the Surface Water Design Manual except those drainage plans developed by, or under the review of, the department of natural resources and parks for either surface and storm water capital improvement, repair, maintenance or restoration projects or other linear government agency projects, such as roadways, railways, pipelines, utility lines and trails.

2. If engineering plans are returned for any reason, they shall be returned to the applicant.

3. All master drainage plans, if required, shall be submitted to the department of development and environmental services for review in accordance with the specifications

DRAFT

in the Surface Water Design Manual. The master drainage plan process should commence at the same time as the state Environmental Policy Act (SEPA) process.

4. Drainage plans not subject to review by the department of development and environmental services under subsection A.1. of this section shall be reviewed by the department of natural resources and parks in accordance with K.C.C. 9.04.050. Project applicability and compliance with K.C.C. 9.04.050 shall be documented in writing and available for review.

B. The expiration time frames as specified in the Surface Water Design Manual shall apply to all permit and approval applications.

C. All plans shall be processed in accordance with the review procedures specified in the Surface Water Design Manual.

D. All submittal procedures, definitions and specifications for the required contents of engineering plans are presented in the Surface Water Design Manual.

SECTION 5. Ordinance 4938, Section 7, as amended, and K.C.C. 9.04.090 are each hereby amended to read as follows:

Construction timing and final approval.

A. No work related to permanent or temporary storm drainage control for a permitted development may proceed without the approval of the director of the department of development and environmental services.

B. Erosion and sediment control measures associated with both the interim and permanent drainage systems shall be:

DRAFT

1. Constructed in accordance with the approved plan prior to any grading or land clearing other than that associated with an approved erosion and sediment control plan; and

2. Satisfactorily sequenced and maintained until all improvements, restoration, and landscaping associated with the permit and approvals for the project are completed and the potential for onsite erosion has passed.

C. The applicant shall have constructed and have in operation those portions of the drainage facilities necessary to accommodate the control of surface and storm water runoff discharging from the site before the construction of any other improvements or buildings on the site, or to final recording of a plat or short plat, unless upon written request of the applicant, the development engineer authorizes recording before construction of facilities in order to minimize impacts that may result from construction of facilities during inappropriate times of the year.

DRAFT

SECTION 6. Ordinance 10636, Section 3, as amended, and K.C.C. 9.12.015 are each hereby amended to read as follows:

Definitions. The definitions in this section apply throughout this chapter unless the context clearly requires otherwise.

A. "AKART" means "all known, available and reasonable methods of prevention, control and treatment." "AKART" represents the most current methodology that can be reasonably required for preventing, controlling or abating the pollutants associated with a discharge. "AKART" applies to both point and nonpoint sources of pollution.

B. "Best management practices" or "BMPs" mean the best available and reasonable physical, structural, managerial or behavioral activities, that, when used singly

or in combination, eliminate or reduce the contamination of both surface and ground waters.

C. "Chapter" means this chapter and any administrative rules and regulations adopted to implement this chapter.

D. "Clean Water Act" means 33 U.S.C. 1251 et. seq., as amended.

E. "Director" means the director of the King County department of natural resources and parks, other department directors specified in enforcement procedures established in accordance with this chapter, or any designee of those directors.

F. "Discharge" means throw, drain, release, dump, spill, empty, emit or pour forth any matter or cause or allow matter to flow, run or seep from land or be thrown, drained, released, dumped, spilled, emptied, emitted or poured into water.

G. "Drainage facility" has the same meaning as in K.C.C. 9.04.020.

H. "Farm management plan" means a comprehensive site-specific plan developed by the farm owner in cooperation with the King Conservation District taking into consideration the land owners objectives while protecting water quality and related natural resources.

I. "Forest practices" means any activity conducted on or directly pertaining to forest land and relating to growing, harvesting, or processing timber, as defined in chapter 222-16 WAC.

J. "Ground water" means all waters that exist beneath the land surface or beneath the bed of any stream, lake or reservoir or other body of surface water, whatever may be the geological formation or structure in which such water stands or flows, percolates or otherwise moves.

DRAFT

K. "National Pollutant Discharge Elimination System" or "NPDES" means the national program for controlling pollutants from point source discharges directly into waters of the United States under the Clean Water Act.

L. "National Pollutant Discharge Elimination System permit" means an authorization, license or equivalent control document issued by the Environmental Protection Agency or the Washington state Department of Ecology to implement the requirements of the NPDES program.

M. "Person" means an individual and his or her agent or assign, municipality, political subdivision, government agency, partnership, corporation, business or any other entity.

N. "Source control BMP" means a BMP intended to prevent contaminants from entering surface and storm water or ground water including the modification of processes to eliminate the production or use of contaminants. "Source control BMPs" can be either structural or nonstructural. Structural source control BMPs involve the construction of a physical structure on site, or other type of physical modification to a site. An example of a structural source control BMP is building a covered storage area. A nonstructural source control BMP involves the modification or addition of managerial or behavioral practices. An example of a nonstructural source control BMP is using less toxic alternatives to current products or sweeping parking lots.

O. "State Waste Discharge Permit" means an authorization, license, or equivalent control document issued by the Washington state Department of Ecology in accordance with chapter 173-216 WAC.

DRAFT

P. " Stormwater Pollution Prevention Manual" means the manual adopted in accordance with K.C.C. chapter 2.98, and supporting documentation referenced or incorporated in the manual, describing best management practices and procedures for existing facilities and existing and new activities not covered by the Surface Water Design Manual.

Q. "Surface and storm water" has the same meaning as in K.C.C. 9.04.020.

R. "Treatment BMP" means a BMP intended to remove contaminants once they are already contained in storm water. Examples of treatment BMPs include oil/water separators, biofiltration swales and wetponds.

SECTION 7. Ordinance 10636, Section 4, as amended, and K.C.C. 9.12.025 are each hereby amended to read as follows:

Discharges into King County waters.

A. 1. It is unlawful for any person to discharge any contaminants into surface and storm water, ground water or Puget Sound. Contaminants include, but are not limited, to the following:

a. trash or debris;

b. construction materials;

c. petroleum products including but not limited to oil, gasoline, grease, fuel oil, and heating oil;

d. antifreeze and other automotive products;

e. metals in either particulate or dissolved form;

f. flammable or explosive materials;

g. radioactive material;

DRAFT

h. batteries;

i. acids, alkalis, or bases;

j. paints, stains, resins, lacquers or varnishes;

k. degreasers and solvents;

l. drain cleaners;

m. pesticides, herbicides or fertilizers;

n. steam cleaning wastes;

o. soaps, detergents or ammonia;

p. swimming pool backwash;

q. chlorine, bromine and other disinfectants;

r. heated water;

s. domestic animal wastes;

t. sewage;

u. recreational vehicle waste;

v. animal carcasses;

w. food wastes;

x. bark and other fibrous materials;

y. collected lawn clippings, leaves or branches;

z. silt, sediment or gravel;

aa. dyes, except as stated in subsection C.1. of this section;

bb. chemicals not normally found in uncontaminated water;

cc. any hazardous material or waste not listed above.

DRAFT

2. Illicit connections. Any connection identified by the director that could convey anything not composed entirely of surface and storm water directly to surface and storm water or ground water is considered an illicit connection and is prohibited with the following exceptions:

a. connections conveying allowable discharges;

b. connections conveying discharges pursuant to an NPDES permit, other than an NPDES storm water permit, or a State Waste Discharge Permit; and

c. connections conveying effluent from onsite sewage disposal systems to subsurface soils.

B. The following types of discharges shall not be considered prohibited discharges for the purpose of this chapter unless the director determines that the type of discharge, whether singly or in combination with other discharges, is causing significant contamination of surface and storm water or ground water:

1. Potable water;

2. Potable water line flushing;

3. Uncontaminated water from crawl space pumps or footing drains;

4. Lawn watering with potable water or collected rainwater;

5. Residential car and boat washing;

6. Materials placed as part of an approved habitat restoration or bank stabilization project;

7. Natural uncontaminated surface water or ground water;

8. Flows from riparian habitats and wetlands;

DRAFT

9. The following discharges from boats: engine exhaust; cooling waters; effluent from sinks; showers and laundry facilities; and treated sewage from Type I and Type II marine sanitation devices;

10. Prohibited discharges to which BMPs are applied as specified in the Stormwater Pollution Prevention Manual or as determined necessary by the director. Activities that might result in prohibited discharges to which BMPs may be applied include, but are not limited to, residential auto repair and maintenance, residential auto washing, residential hazardous waste handling, residential maintenance and repair, residential solid and food waste handling and residential swimming pool and hot tub maintenance; and

11. Other types of discharges as determined by the director.

C. 1. Dye testing is allowable but requires verbal notification to the King County water and land resources division at least one day prior to the date of test. The King County department of public health is exempt from this requirement.

2. A person does not violate subsection A. of this section if:

a. That person has properly designed, constructed, implemented and is maintaining BMPs and is carrying out AKART as required by this chapter, but contaminants continue to enter surface and storm water or ground water; or

b. That person can demonstrate that there are no additional contaminants being discharged from the site above the background conditions of the water entering the site.

3. A person who, under subsection C.2. of this section, is not in violation of subsection A. of this section is liable for any prohibited discharges through illicit

DRAFT

652 connections, dumping, spills, improper maintenance of BMPs or other discharges that
653 allow contaminants to enter surface and storm water or ground water.
654 4. Emergency response activities or other actions that must be undertaken
655 immediately or within a time too short to allow full compliance with this chapter in order
656 to avoid an imminent threat to public health or safety, shall be exempt from this section.
657 The director by public rule may specify actions that qualify for this exception in county
658 procedures. A person undertaking emergency response activities shall take steps to
659 ensure that the discharges resulting from such activities are minimized. In addition, this
660 person shall evaluate BMPs and the site plan, where applicable, to restrict recurrence.
661 SECTION 8. Ordinance 10636, Section 5, as amended, and K.C.C. 9.12.035 are
662 each hereby amended to read as follows:
663 **Stormwater Pollution Prevention Manual.**
664 A. Compliance with this chapter shall be achieved through the use of the best
665 management practices described in the Stormwater Pollution Prevention Manual. In
666 applying the Stormwater Pollution Prevention Manual, the director shall first require the
667 implementation of source control BMPs. If these are not sufficient to prevent
668 contaminants from entering surface and storm water or ground water, the director may
669 require implementation of treatment BMPs as set forth in AKART. The King County
670 water and land resources division will provide, upon reasonable request, available
671 technical assistance materials and information, and information on outside financial
672 assistance options to persons required to comply with this chapter.
673 B. In applying the Stormwater Pollution Prevention Manual to prohibited
674 discharges from normal residential activities, the director shall use public education and

DRAFT

warnings as the primary method of gaining compliance with this chapter and shall not use citations, notice and orders, assessment of civil penalties and fines, or other compliance actions as authorized in K.C.C. 23.02.040, unless the director determines:

a. the discharge from a normal residential activity, whether singly or combination with other discharges, is causing a significant contribution of contaminants to surface and storm water or ground water; or

b. the discharge from a normal residential activity poses a hazard to the public health, safety or welfare, endangers any property or adversely affects the safety and operation of county right-of-way, utilities or other county-owned or maintained property.

C. Persons implementing BMPs through another federal, state or local program will not be required to implement the BMPs prescribed in the county's Stormwater Pollution Prevention Manual, unless the director determines the alternative BMPs are ineffective at reducing the discharge or contaminants. If the other program requires the development of a stormwater pollution prevention plan or other best management practices plan, the person shall make the plan available to King County upon request. Persons who qualify for exemptions include, but are not limited to, persons:

1. Required to obtain a general or individual NPDES permit for storm water discharges from the Washington state Department of Ecology;

2. Implementing and maintaining, as scheduled, a King Conservation District-approved farm management plan;

3. Who have received a permit under a Washington state Department of Ecology NPDES general or individual permit for commercial dairy operations;

4. Implementing BMPs in compliance with K.C.C. chapter 21A.30;

DRAFT

5. Implementing BMPs in compliance with the management program of the county's municipal NPDES permit;

6. Engaged in forest practices, with the exception of forest practices occurring on lands platted after January 1, 1960, or on lands being converted to another use or when regulatory authority is otherwise provided to local government by RCW 76.09.240; or

7. Identified by the director as being exempt from this section.

NEW SECTION. SECTION 9. There is hereby added to K.C.C. chapter 9.04 a new section to read as follows:

Vesting period for lots in final short plats. Unless the department finds that a change in conditions creates a serious threat to the public health or safety in the short subdivision, for a period of five years after recording, a lot within a short subdivision shall be governed by the provisions of this chapter in effect at the time a fully completed application for short subdivision approval was filed in accordance with K.C.C. chapter 20.20.

DRAFT

SECTION 10. **Effective date.** This ordinance takes effect January 1, 2005.

SECTION 11. **Severability.** If any provision of this ordinance or its application

714 to any person or circumstance is held invalid, the remainder of the ordinance or the

715 application of the provision to other persons or circumstances is not affected.

716

Ordinance 15052 was introduced on 3/8/2004 and passed as amended by the Metropolitan King County Council on 10/25/2004, by the following vote:

Yes: 7 - Mr. Phillips, Ms. Edmonds, Mr. Pelz, Mr. Ferguson, Mr. Gossett, Ms. Patterson and Mr. Constantine
No: 6 - Mr. von Reichbauer, Ms. Lambert, Mr. McKenna, Mr. Hammond, Ms. Hague and Mr. Irons
Excused: 0

KING COUNTY COUNCIL
KING COUNTY, WASHINGTON

_____

ATTEST:

_____

DRAFT

APPROVED this 5th day of November, 2004.

_____

Attachments None

KING COUNTY, WASHINGTON
SURFACE WATER DESIGN MANUAL

REFERENCE 2

ADOPTED CRITICAL DRAINAGE AREAS

None at this time

DRAFT

KING COUNTY, WASHINGTON
SURFACE WATER DESIGN MANUAL

REFERENCE 3

OTHER ADOPTED AREA SPECIFIC DRAINAGE REQUIREMENTS

3-A RA Zone Clearing Restrictions

DRAFT

TITLE 16 Excerpts (12/04 Draft)

SECTION 14

Clearing standards for individual lots in the rural zone.

A. Except as otherwise provided in this section, in the RA zone the following standards apply to clearing on individual lots:

1. For lots one and one-quarter acre or smaller:

a. clearing shall not exceed the greater of:

(1) the amount cleared before January 1, 2005, or cleared under a complete clearing permit application filed before October 25, 2004, in accordance with previous county regulations;

(2) fifty percent of the lot area; or

(3) seven thousand square feet.

b. any clearing required for the construction of access, utilities and septic systems-shall not be counted towards the amount of clearing allowed under this subsection;

2. For lots greater than one and one-quarter acres and up to fives acres in area, clearing shall not exceed the greater of:

a. the amount legally cleared before January 1, 2005, or cleared under a complete clearing permit application filed before October 25, 2004, in accordance with previous county regulations; or

b. fifty percent of lot area;

3. For lots greater than fives acres, clearing shall not exceed the greater of:

a. the amount legally cleared before January 1, 2005, or cleared under a

DRAFT

complete clearing permit application filed before October 25, 2004, in accordance with previous county regulations;

b. two and one-half acres, or

c. thirty-five percent of lot area; and

4. For lots greater than one and one-quarter acre in either the Bear Creek basin, the Issaquah Creek basin and the May Creek basin, clearing shall not exceed the greater of:

a. the amount legally cleared before January 1, 2005, or cleared under a complete clearing permit application filed before October 25, 2004, in accordance with previous county regulations; or

b. thirty-five percent of lot area;.

B. The standards in subsection A. of this section shall not apply if more restrictive standards apply through:

1. The Critical Areas Code, K.C.C. chapter 21A.24, or its adopted public rules;

2. Property-specific development standards or special district overlays under K.C.C. chapter 21A.38; or

3. Critical drainage area designations identified by adopted public rule

1. If there is an approved and current rural stewardship plan or farm management plan under K.C.C. chapter 21A.24, the maximum amount of clearing allowed under this section is established by the rural stewardship plan or the farm management plan ;

2. Subsection A. of this section does not apply to a lot within a subdivision or

DRAFT

short subdivision:

a. Approved with clearing restrictions in accordance with section 15 of this ordinance; or

b. In the Bear Creek, Issaquah Creek or May Creek basins that was approved with clearing restrictions in accordance with this section as it existed prior to the effective date of this section;

3. On a lot within a subdivision or short subdivision that is not covered by subsection C.2. of this section, any land located in an open space tract created as part of the subdivision or short subdivision shall be credited to the individual lots in the subdivision or short subdivision on a prorated basis according to the size of each lot in relation the entire area of the subdivision or short subdivision;

4. The area within critical areas and critical area buffers, except for critical aquifer recharge areas, may be counted towards meeting the requirements of subsection A. of this section;

5. Clearing in areas encumbered by a utility corridor, or easement for a public road or trail rights-of-way or an access easement shall not be counted toward the cleared area limit;

6. Clearing standards for mining uses shall be determined through the clearing and grading permit review process; and

7. Clearing that is the minimum necessary to provide for the relocation of equestrian community trails shall not be counted towards the cleared area limit.

D. The director may modify or waive subsection A. of this section for a development proposal that meets the following conditions:

DRAFT

1. The development proposal consists of one or more of the following uses:

a. government services listed in K.C.C. 21A.08.060;

b. educational services listed in K.C.C. 21A.08.050;

c. parks as listed in K.C.C. 21A.08.040 when located adjacent to an existing or proposed school;

d. libraries listed in K.C.C. 21A.08.040; and

e. road projects that are not part of a larger development proposal;

2. The development proposal site is not located in a designated regionally significant resource area, except for utility or road corridors for which the applicant demonstrates that there is no feasible alternative or that the development proposal is within an existing maintained corridor. If only a portion of the project is located within a designated regionally significant resource area, this subsection applies to that portion of the project located outside of the designated regionally significant resource area; and

3. To the maximum extent practical, the project locates structures in already cleared areas of the site and clears the minimum necessary to accommodate the proposed use which includes all the allowed ballfields, playfields, other facilities, and spaces proposed by the public agency to carry out its public function

E. The standards of this section shall be established at the time of permit application. The area required to remain uncleared shall be designated on the site plan approved by the department**.**

F. Areas that are required to remain uncleared under this section shall be maintained by the property owner as a resource area. The uses permitted in the resource area shall not prevent the long-term purpose of the resource area to promote forest cover

DRAFT

and shall include uses such as:

1. Except in areas regulated by a source described in subsection B.3. of this section, forest practices in accordance with a county-approved forest management plan;

2. Passive recreation uses and related facilities, including pedestrian, equestrian community and bicycle trails, nature viewing areas, fishing and camping areas, and other similar uses that do not require permanent structures, if:

a. clearing and soil compaction associated with these uses and facilities does not exceed eight percent of the area of the resource area; and

b. within wildlife habitat corridors, trail widths shall be the minimum allowed under adopted trail standards and no other recreation uses shall be permitted in an area of the corridor at least one hundred fifty feet in width;

3. Utilities and utility easements, including surface water facilities, if the facilities are within or adjacent to existing road or utility easements to the maximum extent practical;

4. Pruning or removing hazard trees or removing downed trees;

5. Reducing the danger from wildfire by following best management practices approved by the King County fire marshal;

b. removal of limbs within ten feet of the ground to prevent movement of fire from ground level to treetops; and

c. removal of dead trees or branches overhanging a residence; and

6. Removal of noxious or invasive vegetation.

G. Before approving a development permit application for a parcel that has been cleared in violation of the clearing standards in effect at the time of the clearing, the

DRAFT

department shall require the applicant submit to the department and implement a restoration plan to restore trees, understory vegetation and soil to support and maintain the native vegetative cover on the percentage of the site that was to remain uncleared under this section. If the clearing is in violation of the six-year moratorium on permitting established in K.C.C. 16.82.140, the department may determine whether the restoration plan is sufficient to mitigate for the impacts resulting from the clearing violation.

SECTION 15

Clearing standards for subdivisions and short subdivisions in the rural residential zone.

A. Except as otherwise provided in this section, the following standards apply to clearing allowed in subdivisions and short subdivisions in the RA zone:

1. Clearing shall not exceed thirty-five percent of the area of the subdivision and short subdivision; and

2. The area remaining uncleared shall be:

a. shown on the face of the recorded plat map to delineate where the uncleared area is to remain on each lot; and

b. marked with at least one sign per buildable lot adjoining the area indicating that the area is a permanent resource management area.

B. The standards in subsection A. of this section shall not apply if more restrictive standards apply through:

1. Property-specific development standards pursuant to K.C.C. chapter 21A.38; or

DRAFT

2. Critical drainage area designations identified by adopted administrative rule.

C. If sixty-five percent or more of the site is in critical areas and critical area buffers, this section does not apply.

D. Clearing to provide for the relocation of equestrian community trails shall not be counted towards the cleared area limit.

E. The department may allow an increase in the amount of clearing up to fifty percent of the site area of a subdivision or short subdivision if the area to remain uncleared:

1. Is placed in a separate resource tract that is:

a. separately identified from critical area tracts on the face of the recorded plat map; and

b. retained by the subdivider, conveyed to residents of the subdivision, or conveyed to a third party;

2. Is situated in a manner that minimizes fragmentation of wildlife habitat or that maximizes protection of critical areas and prevention of flooding, erosion, and groundwater impacts based on site characteristics, including topography and soils; and

3. Complies with either of the following:

a. A reforestation plan for the tract is approved and implemented, if the tract has been legally harvested, or

b. One or more of the following habitats is preserved that is not contained within another critical area or critical area buffer:

(1) cave;

(2) old-growth forest;

DRAFT

(3) mature forest;

(4) area that has an abundance of snags;

(5) talus slope;

(6) breeding habitat for a species that the county should protect under the King County Comprehensive Plan;

(7) foraging habitat for any species that the county shall protect or should protect under the King County Comprehensive Plan; or

(8) a vegetated corridor that connects critical areas, priority habitat areas, designated regionally or locally significant resource areas, and other areas of high wildlife value.

F. The approval of a subdivision or short subdivision application for a parcel that has been cleared in violation of the regulations in effect at the time of the clearing shall require the restoration of trees, understory vegetation and soil to support and maintain native vegetation cover on the percentage of the site that was to remain uncleared under this section. The applicant shall submit to the department a restoration plan. If the clearing is in violation of the six-year moratorium on permitting authorized in K.C.C. 16.82.140, the department may determine whether the restoration plan is sufficient to mitigate for the impacts resulting from the clearing violation.

G. The uses permitted within a resource land tract shall be limited as provided in K.C.C. 16.82.150.F.

DRAFT

SECTION 16

Clearing – modification of limits through farm management and rural stewardship plans. The clearing limits of K.C.C. 16.82.150 and section 15 of this ordinance may be modified through a farm management plan or rural stewardship plan approved in accordance with Ordinance 15051, Sections 138 and 139, respectively.

DRAFT

KING COUNTY, WASHINGTON
SURFACE WATER DESIGN MANUAL

REFERENCE 4

OTHER DRAINAGE RELATED REGULATIONS AND GUIDELINES

4-A Grading Code Soil Amendment Standard

4-B Clearing & Grading Seasonal Limitations

4-C Landscape Management Plan Guidelines

4-D Shared Facility Maintenance Responsibility Guidance

DRAFT

TITLE 16 Excerpts (12/04 Draft)

SECTION 10

F. The duff layer and native topsoil shall be retained in an undisturbed state to the maximum extent practicable. Any duff layer or topsoil removed during grading shall be stockpiled on-site in a designated, controlled area not adjacent to public resources and critical areas. The material shall be reapplied to other portions of the site where feasible.

G.1. Except as otherwise provided in subsection G.2. of this section, areas that have been cleared and graded shall have the soil moisture holding capacity restored to that of the original undisturbed soil native to the site to the maximum extent practicable. The soil in any area that has been compacted or that has had some or all of the duff layer or underlying topsoil removed shall be amended to mitigate for lost moisture-holding capacity. The amendment shall take place between May 1 and October 1. Replaced topsoil shall be a minimum of eight inches thick, unless the applicant demonstrates that a different thickness will provide conditions equivalent to the soil moisture holding capacity native to the site. Replaced topsoil shall have an organic matter content of between eight to thirteen percent dry weight and a pH suitable for the proposed landscape plants.

DRAFT

2. This subsection does not apply to areas that:

a. Are subject to a state surface mine reclamation permit; or

b. At project completion are covered by an impervious surface, incorporated into a drainage facility or engineered as structural fill or slope.

DRAFT

TITLE 16 Excerpts Clearing and Grading Seasonal Limitations

SECTION 9

Erosion and sediment control standards – seasonal limitation period.

A. A person who clears, grades or otherwise disturbs a site shall provide erosion and sediment control that prevents, to the maximum extent practicable, the transport of sediment from the site to drainage facilities, water resources and adjacent properties. Erosion and sediment controls shall be applied as specified by the temporary erosion and sediment control measures and performance criteria and implementation requirements in the King County Surface Water Design Manual adopted in accordance with K.C.C. chapter 9.04.

B. From October 1 through April 30, which is the seasonal limitation period, clearing and grading shall only be permitted if shown to the satisfaction of the director that runoff leaving the construction site will comply with the erosion and sediment control measures and performance criteria and implementation requirements in the King County Surface Water Design Manual adopted in accordance with K.C.C. chapter 9.04 through a combination of the following:

DRAFT

1. Site conditions including vegetative coverage, slope, soil type and proximity to receiving waters;

2. Proposed limitations on activities and the extent of disturbed areas; and

3. Proposed erosion and sedimentation control measures.

C. Based on the information provided under subsection A. of this section, the director may expand or restrict the seasonal limitations on site disturbance. The director

shall set forth in writing the basis for approval or denial of clearing or grading during the seasonal limitation period.

D. During the seasonal limitation period, clearing and grading will be allowed only if there is installation and maintenance of an erosion and sedimentation control plan approved by the department that defines any limits on clearing and grading or specific erosion and sediment control measures required during the seasonal limitation period. The department may require or approve alternate best management practices.

E. If, during the course of construction activity or soil disturbance during the seasonal limitation period, silt-laden runoff violating standards in the King County Surface Water Design Manual leaves the construction site or if clearing and grading limits or erosion and sediment control measures shown in the approved plan are not maintained, a citation and stop work order shall be issued in accordance with K.C.C. chapters 23.20 and 23.28, respectively.

F. If the erosion and sediment control problem defined in the citation or stop work order is not adequately repaired within twenty-four hours of issuance, then a notice and order may be issued in accordance with K.C.C. chapter 23.24 to install adequate erosion and sediment control measures to stop silt-laden runoff from leaving the site. The notice and order may also require the property owner to discontinue any further clearing or grading, except for erosion and sediment control maintenance and repair, until the following April 30.

G. The following activities are exempt from the seasonal limitations of this section:

DRAFT

1. Routine maintenance and necessary repair of erosion and sediment control facilities;

2. Routine maintenance of public facilities or existing utility structures that do not expose the soil or result in removal of the vegetative cover to the soil;

3. Activities where there is one hundred percent infiltration of surface water runoff within the site in approved and installed erosion and sedimentation control facilities;

4. Typical landscaping activities of existing single family residences that do not require a permit;

5. Class I, II III and IV special forest practices in accordance with chapter 76.09 RCW;

6. Mineral extraction activities on sites with approved permits; and

7. Response to emergencies that threaten the public health, safety or welfare, consistent with section 6 of this ordinance.

DRAFT

DRAFT

REFERENCE 4-C

Guidelines for preparing a landscape management plan

Landscape management plans have the potential to significantly reduce the pollutant load washing off managed green spaces. For this reason, landscape management plans that incorporate key pollution prevention elements and which are consistently implemented can be used in lieu of water quality treatment facilities (see Section 1.2.8). Submittal requirements for obtaining an approved landscape management plan are given in Chapter 2.

GENERAL CONSIDERATIONS

Studies of pollutant transport have consistently shown that forested lands consistently produce lower pollutant loads—of solids, phosphorus and metals—than do lands used for residential, industrial or agricultural purposes. "Loading" refers to the total weight of a pollutant leaving a particular area or site. It is measured by determining both the concentration of a pollutant and the amount of flow leaving a site. Since the Puget Sound area was largely forested before settlement, lakes and streams in the area have developed biotic regimes in response to this low pollutant loading—clear, cool waters supporting salmon and other aquatic life. When the input of pollutants increases, lakes and streams often shift to a more biologically productive mode, often with a concomitant loss of clear water and a shift or even a decline in fish species.

When forests are converted to cities, this increase in pollutant load needs to be managed in order to maintain the beneficial uses of lakes and streams. One way to manage pollutants is to treat stormwater before it enters a water body. Biofiltration swales, wetponds and sand filters, as well as other facilities, can be used to provide this treatment. Another approach to manage pollutant loads is to prevent the pollutants from entering stormwater in the first place.

Our best models on how to keep nutrients and pollutants from entering storm water are from the original, unaltered landscape—the forests. Forests have a soft, absorptive **duff** layer, as well as **dense vegetative cover**, especially near the ground surface. Nutrients are provided in the form of **slow-release** organic materials, or leaves, needles and woody material. Rainfall **runoff is greatly reduced** from the levels seen in developed landscapes. These factors help to keep the total load of nutrients and sediments transported to receiving waters low.

ELEMENTS OF A SUCCESSFUL LANDSCAPE MANAGEMENT PLAN

Good planning, tailored to the specific conditions of the site, as well as good follow-through, are both essential in controlling the pollutants generated when forests are replaced with lawns, gardens or other landscape features. This section will focus on planning. Follow-through, or implementation, will be discussed in the next section.

I. Plan contents

A landscape management plan for any particular site works best if developed with the specific site characteristics in mind. Soil type, slope, exposure, depth to groundwater as well as the particular suite of plants chosen for the site all should help direct the specific make-up of the plan. However, there are some basic principles that all sites should consider in order to be successful in controlling the export of soil or organic matter, fertilizers and pesticides in

DRAFT

stormwater runoff. Landscape management plans should address each of the general principles given in Table 1, tailoring them to fit the specific site situation.
Each of the five basic principles is expanded upon in the following section. The recommendations discussed under each principle are intended as a framework for a variety of site situations, from individual homes to large parks and golf courses. Thus, not every landscape management plan may be able to apply each of the listed recommendations. In addition, landscapes are managed for different purposes, some more formal than others. It may be that some recommendations will not be appropriate for very formal sites and thus not adopted, in favor of other management practices that better fit the uses for which the site is intended. In the end, the extent to which a landscape management plan is successful depends on the ability of the practices chosen to retain soil, fertilizers and pesticides on the site and away from water resources throughout the entire year.

Table 1 Basic principles to reduce pollutant transport from landscaped areas

1	Minimize bare soil areas
2	Reduce water demand
3	Reduce extent of turf area—manage remaining turf for low-impact
4	Choose plants with sustainability in mind
5	Manage fertilizer and pesticide use wisely

DRAFT

Principle 1 Minimize bare soil areas

Bare soil areas are one source of solids that can be mobilized and carried downstream by rainfall. Minimizing bare soil areas makes it less likely that solid particles will be dislodged by rainfall. Some pointers on how to manage landscapes to minimize bare soil are given below.

a) Establish dense plantings of pest-resistant groundcover to shade out weeds. Some easy-care recommendations are rock rose (*Cistus* sp.), snowberry (*Symphoricarpus alba*), salal (*Gaultheria shallon*) and kinnickinick (*Arctostaphylos uva-ursi*).

b) If bare soil areas are required, as in plant beds or ball diamonds, surround the bare area with an area of grass or groundcover to filter out solids that may be picked up by stormwater runoff.

- The denser the grass or groundcover, the better it works to capture solids in runoff.
- Try to make the filtering area as level as possible. Avoid low spots, where runoff can concentrate and create channels.
- In general, filter areas should be about one-fourth as long (along the flow path) as the area contributing low, assuming that slopes are gentle (less than about 10 percent). For flat, level areas without dips, this length can be reduced.

c) Repair promptly bare patches in lawns or groundcovers that could contribute solids to stormwater runoff.

d) Don't place bark or loose mulch on slopes where it can be carried to stormdrains.

Principle 2 Reduce water demand

Reducing the need for irrigation reduces the potential movement of pollutants, conserves water and saves money.

a) Use drought tolerant or native vegetation.

b) Install underground irrigation systems timed to water at night or drip irrigation systems.

c) Increase the organic content of soils to improve water-retention capability.

d) Allow for longer water retention by terracing sloped areas.

Principle 3 Reduce turf area and manage remaining turf for low-impact

Turf requires care to look good. In addition to mowing, turf areas typically require water, fertilizer and weed and disease control. However, some practices can reduce or minimize the amount of chemical controls needed.

a) Amend soil with organic matter to a depth of 8 -12 inches before the lawn is established. Till the organic matter into the native soil.

b) Decide if all lawn area needs the same level of upkeep: let some areas have a less formal look if possible, and reduce fertilizer and pesticide use in those areas.

c) Rely on irrigation and lawn aeration as the primary tools to maintain healthy turf.

d) Remove thatch each year to increase water penetration to grass roots and reduce runoff.

e) Plant groundcovers rather than grass in shady areas. Turf grasses usually need at least partial sun to remain vigorous.

DRAFT

Principle 4 Choose plants with sustainability in mind

Plants differ in their ability to cope with different soils, rainfall conditions, pest and diseases and microclimates. Choosing resilient plant species, plants with adaptations for particular environments or creating optimal microenvironments are all techniques that can be used to create landscapes that require less intervention. Less watering and less need for pesticide and fertilizer application means less potential for pollutants to leave the site.

a) Choose disease resistant plants.

b) Choose drought-resistant groundcovers, shrubs and trees in areas with poor soil or little shading.

c) Group plants in clusters with tree, shrub and groundcover layers to create a better micro-environment and to supply organic matter back to the soil.

d) Include plants in the landscape that are important for beneficial insects such as parasitic wasps. If beneficial insects have nothing to sustain them, they won't stick around to control pests when you need them.

e) Use dense plantings or close spacing to shade out weeds rather than herbicides.

f) Use plants with fibrous roots on steeper slopes or erosion-prone areas.[1] Some good choices include:
   - *New Zealand flax (*Phormium penax*)
   - Ornamental grasses, lawn grasses
   - *Rock rose (*Cistus* sp.)
   - Rosa rugosa
   - Salmonberry (*Rubus spectabilis*) -- native
   - Snowberry (*Symphoricarpus alba*)-- native

   * not hardy in all areas of the County

a) Use wetland plants in areas with seeps or a high water table.

b) Attend to installation details. Write enforceable planting specifications that include details such as soil preparation, plant spacing, plant condition and size, planting depth, transplant handling and irrigation. Inspect the job during planting to prevent short cuts such as blowing the soil mixture around root balls rather than digging the roots into amended native soils.

DRAFT

Principle 5 Manage fertilizer and pesticide use wisely

Many landscape plants and turf simply won't do well without fertilization and some amount of pest management. It's therefore important for landscape management plans to address when and how these actions will be taken.

a) Keep plants healthy by building healthy soil using composted organic material. Healthy plants can better resist diseases and insect pests.

b) Tailor fertilizer make-up to lawn needs. Adjust application rate and timing of fertilizer applications to avoid carry-off in storm runoff.

c) Reduce the phosphorus (P) concentration in fertilizers when possible by using a low phosphorous formulation or formulations containing only nitrogen or potassium. Added phosphorus is often not needed for health foliage growth, only for encouraging profuse blooms.

d) Use an integrated pest management approach to control pests. Keep current about non-chemical controls as a first-defense against pests.

e) Encourage a diverse insect community in your landscape: Beneficial insects can help control pests, especially pests of trees and shrubs.

f) Target pesticide application to the specific pest of concern. Avoid pesticide "mixes" targeting generic problems (such as weed and feed) unless you actually need each of the formulations for a current problem.

[1] Note that the County's Sensitive Areas Code (21a) defines and protects steep slopes and landslide hazard areas from encroachment. Generally, clearing of vegetation is prohibited in areas with slopes of 40% or more.

g) Only apply pesticides during the life-stage when the pest is vulnerable.

h) Use fungicides very sparingly—they disrupt the base of aquatic food webs. If you need to use fungicides, spray formulations with faster break-down times. Consult a golf course management text for information on the attributes of various fungicides (and other pesticides). Balough and Walker, 1992, *Golf course management and construction* by Lewis Publishers is one source of information.

i) Tolerate some weeds.

References

"Weed management for lawns and gardens." Washington Toxics Coalition Fact Sheet, 1989.

"Least toxic lawn management." The BioIntegral Resource Center (BIRC), P.O. Box 7414, Berkeley, CA 94707

Washington State Cooperative Extension publications on lawn care, Bulletin Office, Cooperative Extension, Cooper Publication Building, Washington State University, Pullman, WA 99164-5912

Selected tittles include: "Turf grass diseases" and supplement (EB0713 and EB0713S); "European crane fly"(EB0856); "Fertilizer guide: western Washington" (FG0041); "Disease control in home lawns" (EB0938); "Home lawns" (EB0482).

DRAFT

II Plan implementation

A landscape management plan, no matter how good, will not reduce pollutants in runoff if it is not implemented. And implementation often means that the plan needs to be modified over time, since as plants grow and as the cycle of pests change, the original plan may not fit the site. The following must be addressed before a landscape management plan can be approved.

1. Identify who will be responsible for assuring the management plan is carried out.
2. Identify how the applicant will assure that grounds crews or homeowners have the training and/or resources required to implement the plan and keep up to date on advances in landscape care practices and products.
3. Agree to keep records of fertilizer and pesticide application, including rate of application, area treated and disposal or storage of residue.
4. Agree to certify each year that the landscape management plan for the project in question has been carried out, and that needed amendments or updates have been made.
5. Provide the plan to County maintenance or inspection personnel on request
6. Agree to pay an annual fee (based on time expended) to allow the County to administer the certification process, including review of plans, tracking of information, periodic field inspections and sampling.

DRAFT

REFERENCE 4-D

Shared Drainage Facility Maintenance Responsibility Guidelines

Shared facilities are flow control, conveyance, and/or water quality facilities designed and constructed in accordance with the provisions contained in the 2005 SWDM and which serve more than one project. By this we mean that the facility serves more than one residential subdivision, or may serve a combination of residential, commercial and public projects.

Shared facility policies are contained in the Surface Water Design Manual (SWDM) and K.C.C. 9.04.050. Core Requirement #6 states that "King County may assume maintenance of such facilities serving any mix of developments as part of a shared facilities plan."

Shared facilities must have a plan or agreement which is reviewed and approved by King County. The plan may be developed through the Master Drainage Plan process, or through the plat screening or commercial permit process. WLRD assists in the review of shared facility proposals within the existing support framework in the Adjustment and MDP programs, particularly regarding maintenance issues.

Guidelines for assigning maintenance responsibility

1. Shared facilities that serve only single-family residential projects (more than one subdivision) will be maintained by King County.
2. Shared facilities that serve a combination of residential and commercial projects where more than two-thirds of the developed contributing area served is a mix of single or duplex residential units on individual lots and any public improvements will be maintained by KC.
3. Shared facilities that serve a mix of single family residential, public, and commercial projects where a single commercial project is more than one third of the developed contributing area served will be maintained by the property owner of the single commercial project. The facilities must be located on the commercial property responsible for maintenance or within a tract or easement dedicated to the commercial property responsible for maintenance.
4. If there are two commercial projects which individually are more than one third of the developed contributing area served, the shared facility will be jointly maintained by the two commercial property owners. The facility must be located on one or both of the commercial properties responsible for maintenance or within a tract or easement dedicated to the commercial properties responsible for maintenance.
5. Shared facilities that serve commercial subdivision projects in which no single contributing parcel area is more than one third of the total contributing area served may be maintained by KC. The actual situation should be reviewed by WLRD as part of the shared facility plan review process to determine whether the facility should be maintained by KC.
6. King County may elect to maintain shared facilities where there are unusual circumstances such as where shared facilities are located off and not adjacent to the sites they serve.

DRAFT

KING COUNTY, WASHINGTON
SURFACE WATER DESIGN MANUAL

REFERENCE 5

WETLAND HYDROLOGY PROTECTION GUIDELINES

DOE GUIDE SHEET 1B: STORMWATER WETLAND ASSESSMENT CRITERIA

DOE GUIDE SHEET 2B: GUIDELINES FOR PROTECTION FROM ADVERSE IMPACTS OF MODIFIED RUNOFF QUANTITY DISCHARGED TO WETLANDS

DRAFT

Guide Sheet 1B: Stormwater Wetland Assessment Criteria

Excerpted from 2005 DOE Stormwater Manual for Western Washington

This guide sheet gives criteria that disqualify a natural wetland from being structurally or hydrologically engineered for control of stormwater quantity, quality, or both. These criteria should be applied only after performing the alternatives analysis outlined in Guide Sheet 1A.

1. A wetland should not be structurally or hydrologically engineered for runoff quantity or quality control and should be given maximum protection from overall urban impacts (see Guide Sheet 2, Wetland Protection Guidelines) under any of the following circumstances:

    - In its present state it is primarily an **estuarine** or **forested wetland** or a **priority peat system**.

    - It is a rare or irreplaceable wetland type, as identified by the Washington Natural Heritage Program, the Puget Sound Water Quality Preservation Program, or local government.

    - It provides **rare, threatened, or endangered species** habitat that could be impaired by the proposed action. Determining whether or not the conserved species will be affected by the proposed project requires a careful analysis of its requirements in relation to the anticipated habitat changes.

    - It provides a high level of many functions.

DRAFT

In general, the wetlands in these groups are classified in Categories I and II in the "Washington State Wetland Rating System of Western Washington." That publication is available on-line at http://www.ecy.wa.gov/biblio/sea.htmles.

2. A wetland can be considered for structural or hydrological modification for runoff quantity or quality control if most of the following circumstances exist:

    - It is classified in Category IV in the "Washington State Wetland Rating System of Western Washington". In general, Category IV wetlands have monotypic vegetation of similar age and class, lack special habitat features, and are isolated from other aquatic systems. Any functions lost through hydrologic or structural modification in a Category IV wetland would have to be compensated/replaced.

    - The wetland has been previously **disturbed** by human activity, as evidenced by agriculture, fill, ditching, and/or introduced or **invasive weedy plant species**.

- The wetland has been deprived of a significant amount of its water supply by draining or previous urbanization (e. g., by loss of groundwater supply), and stormwater runoff is sufficient to augment the water supply. A particular candidate is a wetland that has experienced an increased summer dry period, especially if the drought has been extended by more than two weeks.

- Construction for structural or hydrologic modification in order to provide runoff quantity or quality control will disturb relatively little of the wetland.

- The wetland can provide the required storage capacity for quantity or quality control through an outlet orifice modification to increase storage of water, rather than through raising the existing overflow. Orifice modification is likely to require less construction activity and consequent negative impacts.

- Under existing conditions the wetland's experiences a relatively high degree of water level fluctuation and a range of velocities (i.e., a wetland associated with substantially flowing water, rather than one in the headwaters or entirely isolated from flowing water).

- The wetland does not exhibit any of the following features:

    - Significant priority peat system or forested zones that will experience substantially altered hydroperiod as a result of the proposed action;

    - Regionally **unusual biological community types**;

    - Animal habitat features of relatively high value in the region (e.g., a protected, undisturbed area connected through undisturbed corridors to other valuable habitats, an important breeding site for protected species);

    - The presence of protected commercial or sport fish;

    - Configuration and topography that will require significant modification that may threaten fish stranding;

    - A relatively high degree of public interest as a result of, for example, offering valued local open space or educational, scientific, or recreational opportunities, unless the proposed action would enhance these opportunities;

DRAFT

- The wetland is threatened by potential impacts exclusive of stormwater management, and could receive greater protection if acquired for a stormwater management project rather than left in existing ownership.

- There is good evidence that the wetland actually can be restored or enhanced to perform other functions in addition to runoff quantity or quality control.

- There is good evidence that the wetland lends itself to the effective application of the Wetland Protection Guidelines in Guide Sheet 2.

- The wetland lies in the natural routing of the runoff. Local regulations often prohibit drainage diversion from one basin to another.

- The wetland allows runoff discharge at the natural location.

DRAFT

Guide Sheet 2B: Guidelines for Protection from Adverse Impacts of Modified Runoff Quantity Discharged to Wetlands
Excerpted from 2001 DOE Stormwater Manual for Western Washington

1. Protection of wetland plant and animal communities depends on controlling the wetland's **hydroperiod**, meaning the pattern of fluctuation of water depth and the frequency and duration of exceeding certain levels, including the length and onset of drying in the summer. A hydrologic assessment is useful to measure or estimate elements of the hydroperiod under existing **pre-development** and anticipated **postdevelopment** conditions. This assessment should be performed with the aid of a qualified hydrologist. Post-development estimates of watershed hydrology and wetland hydroperiod must include the cumulative effect of all anticipated watershed and wetland modifications. Provisions in these guidelines pertain to the full anticipated build-out of the wetland's watershed.

This analysis hypothesizes a fluctuating water stage over time before development that could fluctuate more, both higher and lower after development; these greater fluctuations are termed **stage excursions**. The guidelines set limits on the frequency and duration of excursions, as well as on overall water level fluctuation, after development. To determine existing hydroperiod use one of the following methods, listed in order of preference:

DRAFT

- Estimation by a continuous simulation computer model—
  The model should be calibrated with at least one year of data taken using a continuously recording level gage under existing conditions and should be run for the historical rainfall period. The resulting data can be used to express the magnitudes of depth fluctuation, as well as the frequencies and durations of surpassing given depths. [Note: Modeling that yields high quality information of the type needed for wetland hydroperiod analysis is a complex subject. Providing guidance on selecting and applying modeling options is beyond the scope of these guidelines but is being developed by King County Surface Water Management Division and other local jurisdictions. An alternative possibility to modeling depths, frequencies, and durations within the wetland is to model durations above given discharge levels entering the wetland over various time periods (e. g., seasonal, monthly, weekly). This option requires further development.]

- Measurement during a series of time intervals (no longer than one month in length) over a period of at least one year of the maximum water stage, using a crest stage gage, and instantaneous water stage, using a staff gage--The resulting data can be used to express water level fluctuation (WLF) during the interval as follows:

  Average base stage = (Instantaneous stage at beginning of interval + Instantaneous stage at end of interval)/2

  WLF = Crest stage - Average base stage

Compute mean annual and mean monthly WLF as the arithmetic averages for each year and month for which data are available.

To forecast future hydroperiod use one of the following methods, listed in order of preference:

- Estimation by the continuous simulation computer model calibrated during pre-development analysis and run for the historical rainfall period—
  The resulting data can be used to express the magnitudes of depth fluctuation, as well as the frequencies and durations of surpassing given depths. [Note: Post-development modeling results should generally be compared with predevelopment modeling results, rather than directly with field measurements, because different sets of assumptions underlie modeling and monitoring. Making pre- and post-development comparisons on the basis of common assumptions allows cancellation of errors inherent in the assumptions.]

- Estimation according to general relationships developed from the Puget Sound Wetlands and Stormwater Management Program Research Program, as follows (in part adapted from Chin 1996):

  – Mean annual WLF is very likely (100% of cases measured) to be < 20 cm (8 inches or 0.7 ft) if total impervious area (TIA) cover in the watershed is < 6% (roughly corresponding to no more than 15% of the watershed converted to urban land use).

  – Mean annual WLF is very likely (89% of cases measured) to be > 20 cm if TIA in the watershed is > 21% (roughly corresponding to more than 30% of the watershed converted to urban land use).

  – Mean annual WLF is somewhat likely (50% of cases measured) to be > 30 cm (1.0 ft) if TIA in the watershed is > 21% (roughly corresponding to more than 30% of the watershed converted to urban land use).

  – Mean annual WLF is likely (75% of cases measured) to be > 30 cm, and somewhat likely (50% of cases measured) to be 50 cm (20 inches or 1.6 ft) or higher, if TIA in the watershed is > 40% (roughly corresponding to more than 70% of the watershed converted to urban land use).

  – The frequency of stage excursions greater than 15 cm (6 inches or 0.5 ft) above or below pre-development levels is somewhat likely (54% of cases measured) to be more than six per year if the mean annual WLF increases to > 24 cm (9.5 inches or 0.8 ft).

DRAFT

– The average duration of stage excursions greater than 15 cm above or below pre-development levels is likely (69% of cases measured) to be more than 72 hours if the mean annual WLF increases to > 20 cm.

2. The following hydroperiod limits characterize wetlands with relatively high vegetation species richness and apply to all zones within all wetlands over the entire year. If these limits are exceeded, then species richness is likely to decline. If the analysis described above forecasts exceedences, one or more of the management strategies listed in step 5 should be employed to attempt to stay within the limits.

- Mean annual WLF (and mean monthly WLF for every month of the year) does not exceed 20 cm. Vegetation species richness decrease is likely with: (1) a mean annual (and mean monthly) WLF increase of more than 5 cm (2 inches or 0.16 ft) if predevelopment mean annual (and mean monthly) WLF is greater than 15 cm, or (2) a mean annual (and mean monthly) WLF increase to 20 cm or more if pre-development mean annual (and mean monthly) WLF is 15 cm or less.

- The frequency of stage excursions of 15 cm above or below predevelopment stage does not exceed an annual average of six. Note: A short-term lagging or advancement of the continuous record of water levels is acceptable. The 15 cm limit applies to the temporary increase in maximum water surface elevations (hydrograph peaks) after storm events and the maximum decrease in water surface elevations (hydrograph valley bottoms) between events and during the dry season.

- The duration of stage excursions of 15 cm above or below predevelopment stage does not exceed 72 hours per excursion.

- The total dry period (when pools dry down to the soil surface everywhere in the wetland) does not increase or decrease by more than two weeks in any year.

- Alterations to watershed and wetland hydrology that may cause perennial wetlands to become **vernal** are avoided.

DRAFT

3. The following hydroperiod limit characterizes **priority peat wetlands** (bogs and fens as more specifically defined by the Washington Department of Ecology) and applies to all zones over the entire year. If this limit is exceeded, then characteristic bog or fen wetland vegetation is likely to decline. If the analysis described above forecasts exceedence, one or more of the management strategies listed in step 5 should be employed to attempt to stay within the limit.

- The duration of stage excursions above the predevelopment stage does not exceed 24 hours in any year.

- Note: To apply this guideline a continuous simulation computer model needs to be employed. The model should be calibrated with data taken under existing conditions at the wetland being analyzed and then used to forecast post-development duration of excursions.

4. The following hydroperiod limits characterize wetlands inhabited by breeding native amphibians and apply to breeding zones during the period 1 February through 31 May. If these limits are exceeded, then amphibian breeding success is likely to decline. If the analysis described above forecasts exceedences, one or more of the management strategies listed in step 5 should be employed to attempt to stay within the limits.

- The magnitude of stage excursions above or below the pre-development stage does not exceed 8 cm, and the total duration of these excursions does not exceed 24 hours in any 30 day period.

- Note: To apply this guideline a continuous simulation computer model needs to be employed. The model should be calibrated with data taken under existing conditions at the wetland being analyzed and then used to forecast post-development magnitude and duration of excursions.

5. If it is expected that the hydroperiod limits stated above could be exceeded, consider strategies such as:

- Reduction of the level of development;

- Increasing runoff infiltration [Note: Infiltration is prone to failure in many Puget Sound Basin locations with glacial till soils and generally requires **pretreatment** to avoid clogging. In other situations infiltrating urban runoff may contaminate groundwater. Consult the stormwater management manual adopted by the jurisdiction and carefully analyze infiltration according to its prescriptions.];

- Increasing runoff storage capacity; and

- Selective runoff bypass.

6. After development, monitor hydroperiod with a continuously recording level gauge or staff and crest stage gauges. If the applicable limits are exceeded, consider additional applications of the strategies in step 5 that may still be available. It is also recommended that goals be established to maintain key vegetation species, amphibians, or both, and that these species be monitored to determine if the goals are being met.

DRAFT

KING COUNTY, WASHINGTON
SURFACE WATER DESIGN MANUAL

REFERENCE 6

HYDROLOGIC/HYDRAULIC DESIGN METHODS

6-A EPA Infiltration Rate Test

6-B Pond Geometry Equations

DRAFT

REFERENCE 6-A

FALLING HEAD PERCOLATION TEST PROCEDURE

REFERENCE SECTION 1-A

FALLING HEAD PERCOLATION TEST PROCEDURE

Source: EPA, Onsite Wastewater Treatment and Disposal Systems, 1980.

Number and Location of Tests
A minimum of three tests shall be performed within the area proposed for an absorption system. They shall be spaced uniformly throughout the area. If soil conditions are highly variable, more tests may be required.

Preparation of Test Hole
The diameter of each test hole is 6 inches, dug or bored to the proposed depths of the absorption systems or to the most limiting soil horizon. To expose a natural soil surface, the sides of the hole are scratched with a sharp pointed instrument and the loose material is removed from the bottom of the test hole. Two inches of ½- to ¾-inch rock are placed in the hole to protect the bottom from scouring when the water is added.

DRAFT

Soaking Period
The hole is carefully filled with at least 12 inches of clear water. The depth of water should be maintained for at least 4 hours and preferably overnight if clay soils are present. A funnel with an attached hose or similar device may be used to prevent water from washing down the sides of the hole. Automatic siphons or float valves may be employed to automatically maintain the water level during the soaking period. It is extremely important that the soil be allowed to soak for a sufficiently long period of time to allow the soil to swell if accurate results are to be obtained.
In sandy soils with little or no clay, soaking is not necessary. If, after filling the hole twice with 12 inches of water, the water seeps completely away in less than ten minutes, the test can proceed immediately.

Measurement of the Percolation Rate
Except for sandy soils, percolation rate measurements are made 15 hours but no more than 30 hours after the soaking period began. Any soil that sloughed in to the hole during the soaking period is removed and the water level is adjusted to 6 inches above the gravel (or 8 inches above the bottom of the hole). At no time during the test is the water level allowed to rise more than 6 inches above the gravel.
Immediately after adjustment, the water level is measured from a fixed reference point to the nearest $1/16^{th}$ inch at 30-minute intervals. The test is continued until two successive water level drops do not vary by more than 1/16 inch within a 90-minute period.
After each measurement, the water level is readjusted to the 6-inch level. The last water level drop is used to calculate the percolation rate.
In sandy soils or soils in which the first 6-inch of water added after the soaking period seeps away in less

than 30 minutes, water level measurements are made at 10-minute intervals for a 1-hour period. The last water level drop is used to calculate the percolation rate.

Calculation of the Percolation Rate

The percolation rate is calculated for each test hole by dividing the time interval used between measurements by the magnitude of the last water level drop. This calculation results in a percolation rate in terms of minutes/inch. To determine the percolation rate for the area, the rates obtained from each hole are averaged. (If tests in the area vary by more than 20 minutes/inch, variations in soil type are indicated. Under these circumstances, percolation rates should not be averaged.)

Example: If the last measured drop in water level after 30 minutes is 5/8-inch, then:

Percolation rate = (30 minutes)/(5/8 inch) = 48 minutes/inch.

DRAFT

REFERENCE 6-A

SINGLE-RING PERCOLATION TEST PROCEDURE

Preparation for Test

A single ring made of steel or other durable material a minimum of 3 feet in diameter and a minimum of 6 inches high and an adequate supply of clear water is needed. Tests must be performed in undisturbed native soil in a suitable locations to determine soil percolation rates for the proposed infiltration facility. The surface of the soil where the test is to be run must be accurately leveled and the ring imbedded and sealed in the soil to prevent water from running under the ring and onto the surface.

Soaking Period

The ring shall be carefully filled with at least 6 inches of clear water. The depth of water should be maintained for at least 4 hours and preferably overnight if fine-grained soils are present. Automatic siphons or float valves may be employed to automatically maintain the water level during the soaking period. It is extremely important that the soil be allowed to soak for a sufficiently long period of time to allow the soil to swell if accurate results are to be obtained.

DRAFT

In sandy soils with little or no fines, soaking is not necessary. If, after filling the ring twice with 6 inches of water, the water seeps completely away in less than ten minutes, the test can proceed immediately.

Measurement of the Percolation Rate

Except for sandy soils, percolation rate measurements are made 15 hours but no more than 30 hours after the soaking period began. The water level is adjusted to 6 inches above the soil surface and successive measurements are taken to determine the percolation rate. At no time during the test is the water level allowed to rise more than 6 inches above the soil surface.

Immediately after adjustment, the water level is measured from a fixed reference point to the nearest $1/16^{th}$ inch at 30-minute intervals. The test is continued until two successive water level drops do not vary by more than 1/16 inch within a 90-minute period. After each measurement, the water level is readjusted to the 6-inch level. The last water level drop is used to calculate the percolation rate.

In sandy soils or soils in which the first 6-inch of water added after the soaking period seeps away in less than 30 minutes, water level measurements are made at 10-minute intervals for a 1-hour period. The last water level drop is used to calculate the percolation rate.

Calculation of the Percolation Rate

The percolation rate is calculated for each test by dividing the time interval used between measurements by the magnitude of the last water level drop. This calculation results in a percolation rate in terms of minutes/inch. To determine the percolation rate for the area, the rates obtained from each hole are averaged.

Example: If the last measured drop in water level after 30 minutes is 5/8-inch, then:

Percolation rate = (30 minutes)/(5/8 inch) = 48 minutes/inch.

DRAFT

Reference Section 6-B

Pond Geometry Calculations

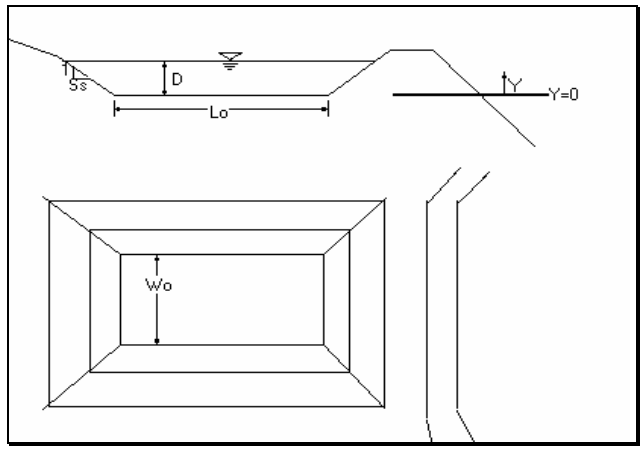

<Known>

Volume	(V)
Pond Depth	(D)
Side Slope	(S_S)
Length-to-Width Ratio	(R)

<Find>

Bottom Area of Rectangular Pond

<Solution>

Y = depth of section measured from bottom, from zero to D
W_0= width at pond bottom

The pond width (W) at any depth, Y

$$W_Y = W_0 + 2S_S Y \qquad \text{Eq. 1}$$

The pond length (L) at any depth, Y

$$L_Y = RW_0 + 2S_S Y \qquad \text{Eq. 2}$$

The pond area at any depth, Y

$$A_Y = L_Y W_Y = (RW_0 + 2S_S Y)(W_0 + 2S_S Y) \qquad \text{Eq. 3}$$

or,

$$A_Y = RW_0^2 + (R+1)2W_0 S_S Y + 4S_S^2 Y^2 \qquad \text{Eq. 4}$$

The equation for the pond-full volume (V) is obtained by integrating between Y=0 and Y=D

DRAFT

$$V = \int_0^D \left(RW_0^2 + (R+1)2W_0 S_S Y + 4S_S^2 Y^2 \right) dY \qquad \text{Eq. 5}$$

or,

$$V = \left[RW_0^2 Y + (R+1)W_0 S_S Y^2 + \frac{4}{3} S_S^2 Y^3 \right]\Bigg|_0^D \qquad \text{Eq. 6}$$

or,

$$V = RDW_0^2 + S_S D^2 (R+1)W_0 + \frac{4}{3} S_S^2 D^3 \qquad \text{Eq. 7}$$

Where

V =	Volume of rectangular pond	R =	Length-to-width ratio
D =	Depth	Ss =	Side Slope
W_0 =	Bottom width		

DRAFT

Rearrange equation to solve for W_0 using quadratic equation, $0 = ax^2 + bx + c$

$$0 = RDW_0^2 + S_S D^2 (R+1)W_0 + \frac{4}{3} S_S^2 D^3 - V \qquad \text{Eq. 8}$$

Use Quadratic Equation to solve for positive solution of W_0, $x = \dfrac{-b \pm \sqrt{b^2 - 4ac}}{2a}$

$$W_0 = \frac{-S_S D^2 (R+1) \pm \sqrt{\left[S_S D^2 (R+1)\right]^2 - 4RD\left(\frac{4}{3} S_S^2 D^3 - V\right)}}{2RD} \qquad \text{Eq. 9}$$

Use Equation 2 for Length of pond at Y=0,
$L_0 = RW_0$

Use Equation 3 for Area of pond at Y=0,
$A_O = L_0 W_0 = RW_0^2$

KING COUNTY, WASHINGTON
SURFACE WATER DESIGN MANUAL

REFERENCE 7

ENGINEERING PLAN SUPPORT

7-A King County Standard Map Symbols

7-B Standard Plan Notes and Example Construction Sequence

DRAFT

TEXT/DIMENSIONS/SYMBOLS

TEXT	DESCRIPTION	(ABBR)	BLOCK	COLOR
PLAN/DETAIL VIEW:				
STA. XXX BEGIN PROJECT	BEGINNING OF PROJECT TEXT(STYLE BOLD)=4.5		BEGPRO	/7
STA. XXX END PROJECT	END OF PROJECT TEXT(STYLE BOLD=4.5		ENDPRO	/7
P.C. STA. 55+65.37(21'RT) BEGIN SIDEWALK	PROPOSED PROJECT CALL OUTS TEXT SIZE = 2' AT 20 SCALE NOTE ARROW SIZE: 3.6' AT 20 SCALE 1ST LINE IS DEFINED LOCATION (NOTE IF P.C., P.T., INT., ETC.)		CALLOUT	2/3/7
STA. XX+XX.XX(XX'RT) RELOCATE POWER POLE (BY OTHERS)			CALLOUT2	2/3/7
50'	TYPICAL DIMENSION LINE W/ARROWS DO NOT USE DIM LINES UNLESS THERE ARE MULTIPLE DIMENSIONS IN AN AREA. NOTE ARROW SIZE: 3.6' AT 20 SCALE		NO BLOCK	3/7/2
NE 175 ST	ROAD-STREET NAMES IN BOLD TEXT(STYLE BOLD)=5 (PRIMARY CONSTRUCTION ROAD)		MAINST	/7
AVONDALE AVE N	SECONDARY ROADS ALONG PROJECT TEXT(BOLD)=4		2NDARYST	/7
CALL 2 DAYS BEFORE YOU DIG 1-800-424-5555 (UNDERGROUND UTILITY LOCATIONS ARE APPROX.)	GENERAL NOTE ON ALL SHEETS (N.T.S.)		B4UDIG	/7
9-1992-015-00	R/W CODE		RWCODE(ATTRIB.)	10/10
	TAX LOT / PARCEL NUMBER		STLN	/7
C/L	CENTERLINE		C/L	/7
GRAVEL D/W	DESCRIPTION OF EXISTING ITEMS TEXT SIZE = 1.75 AT 20 SCALE		NO BLOCK	/8
N 87°13'44" E	BEARINGS EXISTING TEXT SIZE = 2.0 AT 20 SCALE		BEARNG	7
N 87°13'44" E	BEARINGS PROPOSED TEXT SIZE = 2.25 AT 20 SCALE		BEARNGP	7
HOUSING DIVISION/PLAT	TEXT(STYLE SHADOW)=3.5		HOUSE-DIV	2
SEC 25, T26 N, R5 E, WM	SECTION, TOWNSHIP, RANGE STYLE(ROMAND) SIZE 5		STR	4
SE 4 NW 4	QUARTER SECTION STYLE(ROMAND) ALPHAS SIZE 3 STYLE(ROMAND) NUMBERS SIZE 2		QSEC	7/3
CITY OF PACIFIC	TEXT(STYLE TECHNIC)=6		CITYNAME	2
DETAIL TITLE	TITLE(BOLD)=5			
STA. XX+XX.XX TO STA. XX+XX.XX N.T.S.	TEXT= STA.00+00(ROMANS)=2.5		DETITLE	/7

SURVEY C/L CURVE DATA			
Δ = 88°22'01"	CURVE DATA ALONG CENTERLINE CURVES. border /4 text /7 (2.0 AT 20 SCALE)	CURVDATA	4/7
R = 30.00			
L = 46.27			
PI = STA. XXX			

P.T. CURB STA. 58+73.25(24'RT) BEGIN SIDEWALK

FACE OF CURB = COLOR 2
BACK OF CURB = COLOR 7

R=30 6'

CURB RETURN DATA			
Δ = 88°22'01"	CURB RETURN DATA border /4 text /7 (2.0 AT 20 SCALE)	CURBDATA	4/7
R = 30.00			
L = 46.27			

* IT IS NOT INTENDED TO REPLACE APWA OR KC RDSTNDS.

TEXT	DESCRIPTION	BLOCK	COLOR
PROFILE VIEW:			
EXIST. DWY. ASPH. ON (LT) +50 / EXIST. DWY. ASPH. ON (RT) +50	DRIVEWAY CALL (PLUS SIGN ON STATION) TEXT=2	DWCALL_L/DWCALL_R	3/7
	STATION LOCATION		
+00 ROADWAY SECTION X CLEARING AND GRUBBING - LUMP SUM +00 (TEXT=2)		STRCALLB	3/7
+00 85 L.F. CONCRETE CURB & GUTTER +85 (TEXT=2)		STRCALLL	3/7
+00 85 L.F. GUARD RAIL +85 (TEXT=2)		STRCALLR	3/7
PLAN SHEET			
MATCHLINE STA. 25+00 (TEXT=3)			
MATCHLINE STA. 25+00 (TEXT=3)			
325 / 320 PROFILE ELEV. TEXT=2.5 / 315 / 310			
BEGIN PROJECT STA. 85+00 (TEXT=3)			
PROFILE AREA			
END PROJECT STA. 92+00 (TEXT=3)			
325 / 320 PROFILE ELEV. TEXT=2.5 / 315 / 310			
85 / 92 PROFILE STATIONING TEXT=2.5			
SHEET MATCHLINES(TEXT=3)		MATCHL/MATCHR (BLOCKS)	/4
		BEGPROPR/ENDPROPR	/4
PROFILE EXAMPLES:			
PROFILE EXISTING CENTERLINE			
P.V.C. 25+25 ELEV.= 100.01			
P.V.I. 25+50 ELEV.= 103.50			
P.V.T. 25+75 ELEV.= 99.78			
PROFILE DESIGN CENTERLINE			
	DESIGN PROFILE(CREST)	DSNPRFCR	
	DESIGN PROFILE(SAG)	DSNPRFSG	7/4/3
12" CONCRETE (LT HIDDEN2)			
(LT HIDDEN2)			7/4/3
150 L.F. 12" DIAM. 1.75%			
TEXT=1.75 (20 SCALE)	TEXT=2.0 (20 SCALE)		
P.V.I. 25+50 ELEV.= 103.50			
CB TYPE 1 STA. 25+80(24'RT) RIM ELEV = 326.45 INV ELEV.(E,W) = 323.15 INV ELEV.(E) = 323.15			
(20 SCALE)TEXT=1.75	(20 SCALE) TEXT=2.0		
STA. 25+45(21.3'LT) RIM ELEV = 327.4 INV. IN (E,W) = 325.4 INV. OUT (E) = 325.3			
PROPOSED = C.B. TYPE X STA. XX+XX(XX'RT) RIM ELEV. XXX.XX INV. ELEV.(N,S) = XXX.XX INV. ELEV.(E) = XXX.XX	STORM DRAINAGE STRUCTURE NOTE IN PROFILE (EXISTING/PROPOSED) DEPENDING ON LINE WT. TEXT(2.0) AT 20 SCALE LINES (PROPOSED)	SDNOTE_P	7/7
EXISTING = STA. XX+XX(XX'RT) RIM ELEV. XXX.XX INV. ELEV.(N,S) = XXX.XX INV. ELEV.(E) = XXX.XX	STORM DRAINAGE STRUCTURE NOTE IN PROFILE TEXT(1.75) AT 20 SCALE LINES (EXISTING)	SDNOTE_E	10/10

CATCH BASIN PROFILE BLOCKS:

DESC.: CB (EX) TYPE 1, CB (PROP) TYPE 1, CB (EX) TYPE 1-L, CB (PROP) TYPE 1-L, CB (EX) TYPE 2(48), CB (PROP) TYPE 2(48), CB (EX) TYPE 2(54), CB (PROP) TYPE 2(54), CB (EX) TYPE 2(60), CB (PROP) TYPE 2(60), CB (EX) TYPE 2(72), CB (PROP) TYPE 2(72), CB (EX) TYPE 2(96), CB (PROP) TYPE 2(96), INLET (EX), INLET (PROP)

BLOCK NAMES: CB1XPR, CB1PPR, CB1LXPR, CB1LPPR, CB2X48, CB2P48, CB2X54, CB2P54, CB2X60, CB2P60, CB2X72, CB2P72, CB2X96, CB2P96, INLETX, INLETP

LINETYPES

WHEN YOU SEE 3/7 (COLOR) EX./PROP.

SURFACE FEATURES:

EXISTING FEATURE LINETYPES	DESCRIPTION	COLOR	LTYPE
	BUILDING FOOTPRINT (EXIST.)	/8	DASHED2
	STREAMBED/WATER CHANNEL	/8	DITCH
	WATER COURSE FLOWLINE (ARROWS EVERY 25')	/8	DITCH (W/BLOCK)
	FENCE (BLOCK EVERY 10')	/8	CONT. (W/BLOCK)
	GUARDRAIL (EXISTING) (BLOCK EVERY 10')	/8	CONT. (W/BLOCK)
	LAKE/POND/SHORELINE	/8	LAKE
INTERIOR EXTERIOR	WETLAND PERIMETER (DELINEATED BY BIOLOGIST) BLOCK EVERY 10'	/8	CONT. (W/BLOCK)
INTERIOR EXTERIOR	STREAM PERIMETER (DELINEATED BY BIOLOGIST) BLOCK EVERY 10'	/8	CONT. (W/BLOCK)
	RR 100 SCALE OR SMALLER(EX.) (BLOCK EVERY 10')	/8	SPECIAL
	RR 200 SCALE OR LARGER(EX.) (BLOCK EVERY 10')	/8	CONT. (W/BLOCK)
	RETAINING WALL (EXISTING)	/8	SPECIAL
EDGE OF PAVEMENT	CURB/PAVEMENT/SIDEWALK (EX) (TEXT SIZE 1.75)	/8	HIDDEN2
EDGE OF GRAVEL SHOULDER	SHOULDER (EX) (TEXT SIZE 1.75)	/8	HIDDEN
PFL/ PAINTED C/L	PAINTED FOG LINE/CENTERLINE (TEXT SIZE 1.75)	/10	SH-DASH
	CONTOUR (DEPRESSION) (BLOCK EVERY 2')	/8	CONT. (W/BLOCK)
	CONTOUR (INTERVAL) (EXIST.)	/8	CONT.
560	CONTOUR (INDEX) (EXIST.) (TEXT SIZE 1.75) ***	/9	CONT. (W/BLOCK)
TOE/TOP	GRADE BREAK	/10	CONT.

*** INSERT ELEVATION AT 120' INTERVALS [TEXT (EXIST. 1.75')(PROP. 2') HIGH].

DESIGN FEATURE LINETYPES	DESCRIPTION	COLOR	LTYPE
	BUILDING LINE (PROPOSED)	/4	CONT.
	FLAT BOTTOM SWALE	/7	DITCH
	CREEK/DITCH CENTERLINE (PROP.)	/4	DITCH (W/BLOCK)
	FENCE (BLOCK EVERY 10')	/7	CONT. (W/BLOCK)
DRAW TO SCALE	GUARDRAIL (BLOCK EVERY 10')	/4	CONT. (W/BLOCK)
	LAKE/POND	/7	LAKE
FACE / BACK	CURB (PROPOSED)	2/7	CONT.
	RETAINING WALL (PROPOSED)	/4	SPECIAL
EDGE OF PAVEMENT	EDGE PAVEMENT	/4	CONT.
EDGE A.C. SHOULDER	EDGE A.C. SHOULDER	/4	CONT.
EDGE OF GRAVEL SHOULDER	EDGE OF GRAVEL SHOULDER	/4	CONT.
EDGE OF CONC./A.C. SIDEWALK	SIDEWALK (PROP)	/4	CONT.
	CONTOUR (INTERVAL)(PROPOSED)	/7	CONT.
560	CONTOUR (INDEX) (PROPOSED) (TEXT SIZE 2.0) ***	/4	CONT.
GRADING LIMITS X'	CUT/FILL LINE (LIMITS OF GRADING)	/7	CONT.
	OPTIONAL CUT-FILL LINE(SEE FEATURES) X = DISTANCE IN FEET BEYOND R/W	/3	CONT.

SURVEY:

FEATURE LINETYPES	DESCRIPTION	COLOR	LTYPE
SURVEY C/L	SURVEY CENTERLINE (TEXT SIZE 2) (WHEN CONGRUENT WITH R/W C/L)	/6	CONTINUOUS
SURVEY C/L	SURVEY CENTERLINE (TEXT SIZE 2) (WHEN VARIES FROM R/W C/L)	/2	CENTER
R/W C/L	RIGHT OF WAY C/L (TEXT SIZE 2)	/5	CONT.
CONSTRUCTION C/L	CONSTRUCTION C/L (TEXT SIZE 2)	/6	CENTER
DRAINAGE/UTILITY EASEMENT	EASEMENT (PERMANENT) (TEXT SIZE 2)	/4	DASHED2
TEMPORARY CONST. EASEMENT	EASEMENT (TEMPORARY) (TEXT SIZE 2)	/4	DASHED2
	PROPERTY LINE (EXISTING)	/2	PROPERT
	PROPERTY LINE (PROPOSED)	/7	CONT.
	RESERVATION/PARK/FOREST (EX)	/4	PARK
R/W	RIGHT-OF-WAY (CURRENT) (TEXT SIZE 2)	/5	CONT.
PROPOSED R/W	RIGHT-OF-WAY (PROPOSED) (TEXT SIZE 2)	/5	CONT.
PREVIOUS R/W	R/W(REVISIONS SHOWN DURING DESIGN REVIEW ONLY)	/5	DASHED2
	RIGHT-OF-WAY (LIMITED ACCESS) COINCIDENTAL (BLOCK EVERY 2')	7/5	CONT. (W/BLOCK)
	CITY-LIMITS (BLOCK EVERY 5')	/4	CONT. (W/BLOCK)
T.26 N. T.25 N.	RANGE/TOWNSHIP LINE (TEXT SIZE 2)	/6	CONT.
SECTION LINE N 88°57'32" E	SECTION LINE (TEXT SIZE 2)	/5	SECT
1/4 SECTION LINE S 89°06'58" W	QUARTER SECTION LINE (TEXT SIZE 2)	/5	QTRSECT
1/16 SECTION LINE N 89°54'38" E	SIXTEENTH SECTION LINE (TEXT SIZE 2)	/4	16THSECT
	STATE/COUNTY/CORPORATE LIMIT (LINE WIDTH 1.1')	/5	STATE
	MEANDER LINE	/3	MEANDER

UTILITIES (EXISTING): -UG- UNDERGROUND

EXISTING FEATURE LINETYPES	DESCRIPTION	COLOR	LTYPE
TV	CABLE TELEVISION (BURIED)	/8	CONT.
FM	FORCE MAIN	/8	CONT.
G	GAS	/8	CONT.
O	OIL	/8	CONT.
P	POWER (BURIED)	/8	CONT.
SS	SANITARY SEWER	/8	CONT.
T	TELEPHONE (BURIED)	/8	CONT.
	UTILITY SERVICE LINE (GENERAL)	/8	SERV
6"W	WATER	/8	CONT.
6"G 12"	GAS	/8	CONT.
	STORM DRAIN/CULVERT (LABEL IF NOT SHOWN ON PROFILE)	/8	SERV

EXISTING UTILITIES-INSERT TEXT AT 80' INTERVALS (TEXT 1.75' HIGH)
PROPOSED UTILITIES-INSERT TEXT AT 80' INTERVALS (TEXT 2' HIGH)

NOTES:

1. PRINT APWADOC2.DOC FOR MORE INFORMATION ON SYMBOL/LINETYPE INSERTION AND USE OF APWA MENUS.
2. INSERT MON OR MON-IN-CASE SYMBOLS INTO CENTER OF MONUMENTED SECTION CORNERS.
3. USE WATER VALVE AND FITTING SYMBOLS FOR SEWER FORCEMAIN VALVES AND FITTINGS.
4. LINETYPES ARE LOADED FROM THE APWALIN2.LIN LINETYPE FILE.
5. DITCH LINETYPE FLOW DIRECTION ARROW MUST BE INSERTED AT ENDS OF DASHED LINES AS SHOWN ABOVE (BLOCK NAME IS "FL").
6. COMPOSITE LINETYPES ARE DRAWN USING LISP ROUTINES IN APWA MENUS. ALTERNATE METHOD IS TO INSERT BLOCKS OR TEXT ALONG CONTINUOUS LINES USING A MEASURE COMMAND AND MANUALLY BREAK THE LINE AROUND THE TEXT.
7. LINEWEIGHTS ARE BASED ON STANDARD TECHNICAL PENS
8. EXISTING SYMBOLS ARE SHOWN AS SCREENED. IF SCREENING ISN'T AVAILABLE, SUCH AS PEN PLOTTERS, USE A 00 PEN AND SHORT DASHES.
9. WHEN DEVELOPING AUTOCAD FILES USE THE DVIEW COMMAND (NOT UCS) TO ROTATE DISPLAY FITTING BORDER SHEETS AROUND PLAN. THIS WILL INSURE THE ABILITY TO SHARE COMMON COORDINATES AMONG THE DEPARTMENTS. RESET CROSSHAIRS WITH THE SNAP R COMMAND.
10. 0 IS A SYMBOL FOR LINE WEIGHT.
11. ANY PROPOSED ITEM OTHER THAN DRAINAGE MUST BE DEFINED AND LOCATED. LOCATION - IS A STATION ALONG THE BASELINE AND A OFFSET LEFT & RIGHT. STA. 50+43(15'RT) DEFINITION - IS WHAT THE ITEM IS.(CURB, SIDEWALK, SHOULDER, GUARDRAIL, ETC.) AN ITEM IS ALSO A GEOMETRIC POINT.(P.C., INT. A.P., ETC.)
12. USING LEFT AND RIGHT ON PLAN AND PROFILE (12'RT) OR (LT)
13. ALL EXISITNG TEXT IS 1.75

SCALE:

THIS SHEET IS BASED ON TEXT AND SYMBOL SIZE OF A 20 SCALE DRAWING (SYMBOL X 20). FACTOR THE SIZES FOR THE REQUIRED DRAWING SCALE. (i.e.: 50 SCALE = SYMBOL X 50)

FACTORS:

MOST SYMBOLS ARE SET AT A 1:1 SCALE.
SOME KING CO. SYMBOLS THAT ARE TEXT BLOCKS ARE SET AT 20 SCALE. FOR 50 SCALE = (BLOCK) OR (TEXT) X 2.5.

TEXT STYLES(ACAD): PLEASE USE FOLLOWING STYLES

ROMANS SHADOW
ROMAND
TECHNIC BOLD

DRAFT

FIELD BOOK:			
SURVEYED:			
SURVEY BASE MAP:			
DESIGN ENTERED:			
DESIGNED		BR	7/18/96
CHECKED:		BR	3/26/96
DATE	REVISION	BY	DATE

CONSULTANT ENGINEER'S STAMP

CONSULTANT ENGINEER'S STAMP

FED. AID No.
PROJECT No.
SURVEY No.
MAINTENANCE DIVISION No.

COUNTY ENGINEER'S STAMP (RON PAANANON) FOR COUNTY ROAD ENGINEER

ROADS OR TRAFFIC MANAGER'S STAMP

KING COUNTY DEPT. OF TRANSPORTATION
PAUL TOLIVER, DIRECTOR

STANDARD TEXT AND LINETYPES

PRINTED 3/20/97

SHEET 1 OF 2 SHEETS

XXX-X(X)

/KCES/STANDARD/SYMBOLS/APWA-KC3.DWG

DRAINAGE

SYMBOL EXIST.	SYMBOL PROP.	DESCRIPTION	(ABBR)	BLOCK	COLOR
		SAN. SEWER CLEAN OUT	(CO)	SSCO/SSCOP	E8/P7
		SAN. SEWER MANHOLE	(SSMH)	SSMH/SSMHP	E8/P7
		STORM DRAIN CATCH BASIN	(CB)	SDCB/SDCBP	E8/P7
		STORM DRAIN INLET(NO CATCH)	(CI)		E8/P7
		STORM DRAIN CULVERT	(CULV)		E8/P7
		STORM DRAIN MANHOLE	(SDMH)	SDMH/SDMHP	E8/P7
25 L.F. 12"		STORM PIPE(PROPOSED) DOUBLE LINE TO SIZE OF PIPE DIAMETER			

WATER

SYMBOL EXIST.	SYMBOL PROP.	DESCRIPTION	(ABBR)	BLOCK	COLOR
		CAP/PLUG		WCAP	E8/P3
		COUPLING	(CPL)	WCOUP/WCOUPP	E8/P3
		GUARD POST	(GP)	WGP/WGPP	E8/P3
		REDUCER	(RED)	WRED/WREDP	E8/P3
		THRUST BLOCK	(TB)	WTB/WTBP	E8/P3
		WATER METER	(WM)	WMET/WMETP	E8/P3
FIRE HYDRANTS:					
		2-NOZZLE	(FH)	WFH2/WFH2P	E8/P3
		3-NOZZLE	(FH)	WFH3/WFH3P	E8/P3
JOINTS:					
		FLANGE/BLIND FL	(FL)	WFL	E8/P3
		MECHANICAL	(BL FL) (MJ)	WMJ	E8/P3
		PUSH-ON/HUB		WHUB	E8/P3
		THREAD	(THD)	WTH	E8/P3
VALVES:					
		AIR RELIEF	(AIR)	WARV/WARVP	E8/P3
		BLOW-OFF	(BO)	WBOV/WBOVP	E8/P3
		BUTTERFLY	(BF)	WBFV/WBFVP	E8/P3
		CHECK	(CK)	WCKV/WCKVP	E8/P3
		GATE/GENERAL	(WV)	WGV/WGVP	E8/P3
		PLUG VALVE	(PV)	WPV/WPVP	E8/P3

GAS/POWER/TELEPHONE

SYMBOL EXIST.	SYMBOL PROP.	DESCRIPTION	(ABBR)	BLOCK	COLOR
		GAS METER	(GM)	GMET/GMETP	E8/P3
		GAS VALVE	(GV)	GV/GVP	E8/P3
		PAD MOUNTED TRANSFORMER	(P TRAN)	PTRAN/PTRANP	E8/P7
		POWER VAULT	(POW V)	PV/PVP	E8/P7
		TRANSMISSION TOWER (SCALEABLE)	(TRANS TWR)	PTWR	E8/P3
		UTILITY POLE	(PP, TP)	UP/UPP	E8/P3
		POWER POLE	(PP)	KPP	E8/P7
		UTILITY POLE ANCHOR		UPA/UPAP	E8/P3
		TELEPHONE RISER	(TEL R)	TELR/TELRP	E8/P3
		TELEPHONE VAULT	(TEL V)	TV/TVP	E8/P7

SURVEY

SYMBOL	DESCRIPTION	(ABBR)	BLOCK	COLOR
	ANGLE POINT	(AP)	SAP/SAPP	E8/P3
	BENCH MARK	(BM)	SBM/SBMP	E8/P3
	BLOCK CORNER	(BC)	SBC/SBCP	E8/P3
	IRON PIPE	(IP)	SIP/SIPP	E8/P3
	MONUMENT (IN CASE)	(MIC)	SMIC/SMICP	E8/P3
	MONUMENT (SURFACE)	(MON)	SMON/SMONP	E8/P3
	OWNERSHIP TIE	(OT)	SOT	E7
16	SECTION CENTER		SSCT	E7
8 9 17 16	SECTION CORNER		SSC/SSCP	E8/P3
	QUARTER CORNER		SQC/SQCP	E8/P3
	SIXTEENTH CORNER		SSXC/SSXCP	E8/P3
	CLOSING CORNER		SCC/SCCP	E8/P3
MC	MEANDER CORNER	(MC)	SMC/SMCP	E8/P3
WC	WITNESS CORNER	(WC)	SWC/SWCP	E8/P3
	SOIL BORING	(SB)	SSB/SSBP	E8/P3
	SPOT ELEVATION	(SE)	SSE/SSEP	E8/P3
	TAX LOT / PARCEL NUMBER		STLN	P7
5	INTERSTATE		I-5SYM	P7

CHANNELIZATION

SYMBOL EXIST.	SYMBOL PROP.	DESCRIPTION	(ABBR)	BLOCK	COLOR
		BIKE PATH		CB/CBP	E8/P2
		HANDICAP		CHS/CHSP	E8/P2
		H.O.V. LANE		CHOV/CHOVP	E8/P2
ONLY	ONLY	ONLY		CO/COP	E8/P2
RR	RR	RR CROSSING		CRR/CRRP	E8/P2
SCHOOL	SCHOOL	SCHOOL		CSC/CSCP	E8/P2
STOP	STOP	STOP		CS/CSP	E8/P2
LANE CONTROL ARROWS:					
		STRAIGHT		CSA/CSAP	E8/P2
		L.T.R.T.STR		CLRS/CLRSP	E8/P2
		LEFT-RIGHT		CLR/CLRP	E8/P2
		LEFT TURN		CLT/CLTP	E8/P2
		RIGHT TURN		CRT/CRTP	E8/P2
		LEFT-STRAIGHT		CLS/CLSP	E8/P2
		RIGHT-STRAIGHT		CRS/CRSP	E8/P2
RAISED MARKERS-STRIPING:					
		MARKERS TYPE I		CLM1/CLM1P	E8/P2
		MARKERS TYPE II		CLM2/CLM2P	E8/P2
		CROSSWALK 1' LINE			E8/P2
		SOLID STRIPE 0.5' LINE			E8/P2
		SKIP STRIPE 0.5' LINE			

SURFACE FEATURES

SYMBOL EXIST.	SYMBOL PROP.	DESCRIPTION	(ABBR)	BLOCK	COLOR
BUS	BUS	BUS STOP		SFBS/SFBSP	E8/P7
		MAIL BOX		SFMB/SFMBP	E8/P7
		RIP RAP		SFRR/SFRRP	E8/P7
		ROCK FACING		SFR/SFRP	E8/P7
		SHRUB		SFS/SFSP	E8/P7
		GENERAL SIGN		SFSN/SFSNP	E8/P7
		REGULATORY SIGN		RSN/RSNP	E8/P7
		TREE (Conifer)		SFC/SFCP	E8/P7
		TREE (Deciduous)		SFD/SFDP	E8/P7
		YARD LIGHT		SFL/SFLP	E8/P7
		EXISTING BRIGDE/TUNNEL (SCALEABLE)			E8/P4
		PROPOSED BRIDGE/TUNNEL (SCALEABLE)			E8/P4

SIGNALIZATION

SYMBOL EXIST.	SYMBOL PROP.	DESCRIPTION	(ABBR)	BLOCK	COLOR
		AERIAL DISCONNECT		TAD/TADP	E8/P3
		AERIAL TERMINAL COMPARTMENT		TATC/TATCP	E8/P3
DETECTORS:					
		DIPOLE DETECTOR		TDD/TDDP	E8/P7
		QUADRAPOLE DETECTOR		TQD/TQDP	E8/P7
		PEDESTRIAN DETECTOR		TPD/TPDP	E8/P7
EMERGENCY VEHICLE INDICATOR LIGHTS:					
		INDICATOR LIGHTS		TIL/TILP	E8/P7
		OPTICOM SENSOR		TOS/TOSP	E8/P7
		OPTICOM SENSOR W/ INDICATOR LIGHTS		TOSL/TOSLP	E8/P7
		FLASHING WARNING SYSTEM		TFWS/TFWSP	E8/P7
		JUNCTION BOX (TYPE I, II, III)		TJB1/TJB1P TJB2/TJB2P TJB3/TJB3P	E8/P7
		PEDESTRIAN PUSHBUTTON POST W/ PUSHBUTTON		TPB/TPBP	E8/P7
		PEDESTRIAN SIGNAL HEAD		TPSH/TPSHP	E8/P7
		POLE NOTE		TPN	E8/P7
		R/R CROSSING GATE		TRG/TRGP	E8/P7
		R/R CROSSING SIGNAL		TRC/TRCP	E8/P7
		SIGNAL CONTROLLER		TSC/TSCP	E8/P7
		SIGNAL LOAD CENTER		TSLC/TSLCP	E8/P7
		STREET LIGHT ASSEMBLY		TSLA/TSLAP	E8/P7
		LUMINAIRE		LUM/LUMP	E8/P7
TRAFFIC SIGNS:					
		BRIDGE		TSB/TSBP	E8/P7
		CANTILEVERED		TSCL/TSCLP	E8/P7
		SINGLE POST		TSS/TSSP	E8/P7
		DOUBLE POST		TSD/TSDP	E8/P7
		TRAFFIC SIGNAL POLE		TPOL/TPOLP	E8/P7
		TRAFFIC SIGNAL POLE W/ LUMINAIRE		TSPL/TSPLP	E8/P7
		TRAFFIC SIGNAL SUPPORT POLE		TSPOL/TSPOLP	E8/P7

ROAD PLAN

SYMBOL	DESCRIPTION	(ABBR)	BLOCK	COLOR
	NORTH ARROW (N.T.S.)		SNA	/P7
SCALE IN FEET	SCALE BAR (N.T.S.)		SCALE10 SCALE20 SCALE50 SCALE100	/P7
	BREAKLINES FOR ROADS, PIPE, STC.		BKLN	/P7
(CHECK STNDS FOR DISTANCES) (WHEN USING THIS SYMBOL)	CURB RAMP SYMBOL		C-RAMP	/P7
VARIES	DRIVEWAY CURB CUT SYMBOLS		DW-RAMP	/P7
	CUT SLOPE CATCH POINTS (OPTIONAL) (SCALEABLE) EMBANKMENT		C-SLOPE	/P3
SHOULDER	FILL SLOPE CATCH POINTS (OPTIONAL) (SCALEABLE) EMBANKMENT		F-SLOPE	/P3

ROAD PROFILE

SYMBOL	DESCRIPTION	(ABBR)	BLOCK	COLOR
	CIRCLE TO BE SHOWN AT GEOMETRICAL POSITIONS I.E. P.C.,P.T., INT. PVI,PI,PVC (BOTH IN PLAN AND PROFILE) 1' DIAM.		PC	/7
	POINT OF VERTICAL INTERSECTION	PVI	PVI	/7
MERIDIAN ZONE DATA	DATUM (N.T.S.)		SDAT	/7
EQUATION	EQUATION FOR PROFILE CAN ALSO BE USED FOR BREAKING STEEP PROFILES TO FIT ON A PROFILE PAGE TEXT(ROMAND)=3.5		EQTN	/P7
ARROWS:				
	PROFILE ARROWS (FOR USE FOR CALLS ALONG THE PROFILE) SIZE = 6'x 2' USE WITH LINE AT PEN 2			/P2
	ARROWS DEPICTING LEFT(UP) OR RIGHT(DOWN) USE HALF ARROW IF RT./LT. ITEM IS NOT LABELED. SIZE = 3'x 1'		AR-PR-L AR-PR-R	/P2
2% 1.5' 8' 3' 1' TEXT=1.75 ARROW	FLOWLINE(EXIST)	EFL	EFL	E8/
2% TEXT=2	FLOWLINE(PROP.) NO '+ OR - SIGN NEEDED	PFL	PFL	/P7
5	STORM DRAINAGE REFERENCE NOTE FOR STRUCTURE NOTE SHEET WITH TEXT ATTRIBUTES		DRAIN-NO	/P7

REFERENCE SYMBOLS

SYMBOL	DESCRIPTION	(ABBR)	BLOCK	COLOR
99	CONSTRUCTION REFERENCE NOTE WITH TEXT ATTRIBUTES		BUBBLE-HX	/P7

REFERENCE SYMBOLS OR BULLETS CAN BE USED INSTEAD OF CALLING OUT STATIONS AND ITEMS.

IF A REFERENCE SYMBOL IS USED THE ASSOCIATED DATA MUST BE WRITTEN SOMEWHERE WITHIN THE PLAN SET. THIS WILL BE ALL THE DESCRIPTIVE DATA AS WELL AS LOCATIONS USING THE REFERENCE NUMBER AS A KEY.

KEY

STANDARD PEN WIDTHS:

COMMON USAGE:	ACAD COLOR	PEN SIZE mm (in)	PEN CLASS	PIXELS CALCOMP *	ACAD NUMBER	PEN STOP
PRIMARY						
(HATCHING, SMALL FULL TONE TEXT)	RED	0.25(0.010)	3x0	3	1	1
(DIMENSIONS LINES, ARROWS,LEADERS)	YELLOW	0.30(0.013)	2x0	4	2	2
(LEADERS,TEXT,SYMBOLS)	GREEN	0.35(0.017)	0	5	3	3
(PROPOSED TEXT, LINES,SYMBOLS)	WHITE	0.45(0.020)	1	6	7	4
(PROPOSED TEXT, LINES, TITLES)	CYAN	0.60(0.028)	2	8	4	5
(R/W, PROPOSED LINES, TITLES)	BLUE	0.70(0.035)	3	10	5	6
	MAGENTA	0.80(0.043)	4	12	6	5
(EXISTING SYMBOLS, LINES)	8	0.35	0(HALF TONED)	5	8	7
(EXISTING TEXT, LINES)	9	0.45	1(HALF TONED)	6	9	8
	10	0.20(0.008)	4x0	2	10	

* PEN WIDTH=PIXEL(#) x (0.0022) + 0.0012(INCHES)
* PEN WIDTH=PIXEL(#) x (0.069) + 0.033(MM)

DRAFT

FIELD BOOK:			
SURVEYED:			
SURVEY BASE MAP:			
DESIGN ENTERED:			
DESIGNED		BR	7/18/96
CHECKED:		BR	3/26/96
	DATE	REVISION	BY DATE

CONSULTANT ENGINEER'S STAMP

CONSULTANT ENGINEER'S STAMP

FED. AID No.

PROJECT No.

SURVEY No.

MAINTENANCE DIVISION No.

COUNTY ENGINEER'S STAMP

(RON PAANANON)

COUNTY ROAD ENGINEER

ROADS OR TRAFFIC MANAGER'S STAMP

KING COUNTY DEPT. OF TRANSPORTATION

PAUL TOLIVER, DIRECTOR

STANDARD TEXT AND LINETYPES

PRINTED 3/20/97

SHEET 2 OF 2 SHEETS

XXX-X(X)

/KCFS/STANDARD/SYMBOLS/APWA-KC3.DWG

KING COUNTY
STANDARD PLAN NOTES

The standard plan notes must be included on all engineering plans. Notes which in no way apply to the project may be omitted; however, the remaining notes must not be renumbered. For example, if General Note #3 were omitted, the remaining notes should remain numbered 1, 2, 4, 5, 6, etc.

GENERAL NOTES

(1) All design and construction shall be in accordance with permit conditions, the King County Code (KCC), Road Standards (KCRS), Washington State DOT (WSDOT) Standard Specifications and the conditions of preliminary approval. It shall be the sole responsibility of the applicant and the professional civil engineer to correct any error, omission, or variation from the above requirements found in these plans. All corrections shall be at no additional cost or liability to King County.

(2) The design elements within these plans have been reviewed according to the King County Department of Development and Environmental Services (DDES) Engineering Review checklist. Some elements may have been overlooked or missed by the DDES plan reviewer. Any variance from adopted standards is not allowed unless specifically approved by King County prior to construction.

(3) Approval of this road, grading, parking and drainage plan does not constitute an approval of any other construction (e.g. domestic water conveyance, sewer conveyance, gas, electrical, etc.)

(4) Before any construction or development activity, a preconstruction meeting must be held between the DDES's Land Use Inspection Section, the Applicant, and the Applicant's Construction Representative.

(5) A copy of these approved plans must be on the job site whenever construction is in progress.

(6) Grading activities (site alteration) are limited to the hours of 7 a.m. to 7 p.m. Monday through Saturday and 10 a.m. to 5 p.m. on Sunday, unless otherwise approved with a written decision by the Reviewing Agency.

(7) It shall be the applicant's/contractor's responsibility to obtain all construction easements necessary before initiating off-site work. Easements require review and approval prior to construction.

(8) Franchised utilities or other installations that are not shown on these approved plans shall not be constructed unless an approved set of plans that meet all requirements of KCRS Chapter 8 are submitted to the DDES's Land Use Inspection Section three days prior to construction.

(9) Datum shall be KCAS unless otherwise approved by DDES.

(10) Dewatering system (underdrain) construction shall be within a right-of-way or appropriate drainage easement, but not underneath the roadway section. All underdrain systems must be constructed in accordance with WSDOT Standard Specifications.

(11) All utility trenches and roadway subgrade shall be backfilled and compacted to 95 percent density, standard proctor.

(12) Open cutting of existing roadways for non-franchised utility or storm work is not allowed unless specifically approved by DDES and noted on these approved plans. Any open cut shall be restored in accordance with KCRS.

(13) The Contractor shall be responsible for providing adequate safeguards, safety devices, protective equipment, flaggers, and any other needed actions to protect the life, health, and safety of the public, and to protect property in connection with the performance of work covered by the contractor. Any work within the traveled right-of-way that may interrupt normal traffic flow shall require at least one flagger for each lane of traffic affected. Manual on Uniform Traffic Control Devices (MUTCD) shall apply. Work in right-of-way is not authorized until a traffic control plan is approved by King County.

DRAFT

DRAINAGE NOTES

(1) Proof of liability insurance shall be submitted to DDES prior to the construction of the drainage facilities, preferably at the preconstruction meeting.

(2) All pipe and appurtenances shall be laid on a properly prepared foundation in accordance with WSDOT specifications. This shall include leveling and compacting the trench bottom, the top of the foundation material, and any required pipe bedding, to a uniform grade so that the entire pipe is supported by a uniformly dense unyielding base.

(3) Steel pipe shall be aluminized, or galvanized with asphalt treatment #1 or better inside and outside.

(4) All drainage structures, such as catch basins and manholes, not located within a traveled roadway or sidewalk, shall have solid locking lids. All drainage structures associated with a permanent retention/detention facility shall have solid locking lids.

(5) All catch basin grates shall conform to KCRS, which includes the stamping "OUTFALL TO STREAM, DUMP NO POLLUTANTS" and "Property of King County", except that private drainage systems shall not have the words “Property of King County”.

(6) All driveway culverts located within King County right-of-way shall be of sufficient length to provide a minimum 3:1 slope from the edge of the driveway to the bottom of the ditch. Culverts shall have beveled end sections to match the side slope KCRS.

(7) Rock for erosion protection of roadway ditches, where required, must be of sound quarry rock, placed to a depth of 1 foot, and must meet the following specifications: 4"-8"/40%-70% passing; 2"- 4" rock/30%-40% passing; and -2" rock/10%-20% passing. Installation shall be in accordance with KCRS.

(8) Drainage outlets (stub-outs) shall be provided for each individual lot, except for those lots approved for infiltration by King County. Stub-outs shall conform to the following:

a) Each outlet shall be suitably located at the lowest elevation on the lot, so as to service all future roof downspouts and footing drains, driveways, yard drains, and any other surface or subsurface drains necessary to render the lots suitable for their intended use. Each outlet shall have free-flowing, positive drainage to an approved stormwater conveyance system or to an approved outfall location.

b) Outlets on each lot shall be located with a five-foot-high, 2" x 4" stake marked "storm" or "drain". The stub-out shall extend above surface level, be visible, and be secured to the stake.

c) Pipe material shall conform to underdrain specifications described in KCRS and, if non-metallic, the pipe shall contain wire or other acceptable detection.

d) Drainage easements are required for drainage systems designed to convey flows through individual lots.

e) The applicant/contractor is responsible for coordinating the locations of all stub-out conveyance lines with respect to the utilities (e.g. power, gas, telephone, television).

f) All individual stub-outs shall be privately owned and maintained by the lot home owner.

(9) All disturbed pervious areas (compacted, graded, landscaped, etc.) of the development site must demonstrate one of the following: The existing duff layer shall be staged and redistributed to maintain the moisture capacity of the soil, OR; Amended soil shall be added to maintain the moisture capacity.

(10) Seasonal clearing is limited between October 1 and March 30 inclusive, unless otherwise approved with a written decision by the Reviewing Agency.

(11) Improvements and/or buildings shall not be installed until drainage facilities are “in operation”, (KCC 9.04).

DRAFT

EROSION AND SEDIMENTATION CONTROL NOTES

(1) Approval of this erosion and sedimentation control (ESC) plan does not constitute an approval of permanent road or drainage design (e.g. size and location of roads, pipes, restrictors, channels, retention facilities, utilities, etc.)

(2) The implementation of these ESC plans and the construction, maintenance, replacement, and upgrading of these ESC facilities is the responsibility of the applicant/ESC supervisor until all construction is approved.

(3) The boundaries of the clearing limits shown on this plan shall be clearly flagged by survey tape or fencing, if required, prior to construction (SWDM Appendix D). During the construction period, no disturbance beyond the clearing limits shall be permitted. The clearing limits shall be maintained by the applicant/ESC supervisor for the duration of construction.

(4) Stabilized construction entrances shall be installed at the beginning of construction and maintained for the duration of the project. Additional measures, such as constructed wheel wash systems or wash pads, may be required to ensure that all paved areas are kept clean and track out to road right of way does not occur for the duration of the project.

(5) The ESC facilities shown on this plan must be constructed prior to or in conjunction with all clearing and grading so as to ensure that the transport of sediment to surface waters, drainage systems, and adjacent properties is minimized.

(6) The ESC facilities shown on this plan are the minimum requirements for anticipated site conditions. During the construction period, these ESC facilities shall be upgraded as needed for unexpected storm events and modified to account for changing site conditions (e.g. additional cover measures, additional sump pumps, relocation of ditches and silt fences, perimeter protection etc.).

(7) The ESC facilities shall be inspected daily by the applicant/ESC supervisor and maintained to ensure continued proper functioning. Written records shall be kept of weekly reviews of the ESC facilities.

(8) Any areas of exposed soils, including roadway embankments, that will not be disturbed for two days during the wet season or seven days during the dry season shall be immediately stabilized with the approved ESC cover methods (e.g., seeding, mulching, plastic covering, etc.).

(9) Any area needing ESC measures, not requiring immediate attention, shall be addressed within seven (7) days.

(10) The ESC facilities on inactive sites shall be inspected and maintained a minimum of once a month or within 24 hours following a storm event.

(11) At no time shall more than one (1) foot of sediment be allowed to accumulate within a catch basin. All catch basins and conveyance lines shall be cleaned prior to paving. The cleaning operation shall not flush sediment-laden water into the downstream system.

(12) Any permanent retention/detention facility used as a temporary settling basin shall be modified with the necessary erosion control measures and shall provide adequate storage capacity. If the permanent facility is to function ultimately as an infiltration system, the temporary facility must be rough graded so that the bottom and sides are at least three feet above the final grade of the permanent facility.

(13) Cover measures will be applied in conformance with Appendix D of the Surface Water Design Manual.

(14) Prior to the beginning of the wet season (Oct. 1), all disturbed areas shall be reviewed to identify which ones can be seeded in preparation for the winter rains. Disturbed areas shall be seeded within one week of the beginning of the wet season. A sketch map of those areas to be seeded and those areas to remain uncovered shall be submitted to the DDES inspector for review.

DRAFT

STRUCTURAL NOTES

(1) These plans are approved for standard road and drainage improvements only. Plans for structures such as bridges, vaults, and retaining walls require a separate review and approval by DDES prior to construction (KCC 16.04. 16.70, 14.20).

(2) Rockeries are considered to be a method of bank stabilization and erosion control. Rockeries shall not be constructed to serve as retaining walls. All rockeries in County road right-f-way shall be constructed in accordance with KCRS. Rockeries outside of road right-f-way shall be constructed in accordance with the International Building Code.

EROSION AND SEDIMENT CONTROL RECOMMENDED CONSTRUCTION SEQUENCE

(1) Pre-construction meeting.
(2) Post sign with name and phone number of ESC supervisor (may be consolidated with the required notice of construction sign).
(3) Flag or fence clearing limits.
(4) Install catch basin protection if required.
(5) Grade and install construction entrance(s).
(6) Install perimeter protection (silt fence, brush barrier, etc.).
(7) Construct sediment ponds and traps.
(8) Grade and stabilize construction roads.
(9) Construct surface water controls (interceptor dikes, pipe slope drains, etc.) simultaneously with clearing and grading for project development.
(10) Maintain erosion control measures in accordance with King County standards and manufacturer's recommendations.
(11) Relocate erosion control measures or install new measures so that as site conditions change the erosion and sediment control is always in accordance with the King County Erosion and Sediment Control Standards.
(12) Cover all areas that will be unworked for more than seven days during the dry season or two days during the wet season with straw, wood fiber mulch, compost, plastic sheeting or equivalent.
(13) Stabilize all areas that reach final grade within seven days.
(14) Seed or sod any areas to remain unworked for more than 30 days.
(15) Upon completion of the project, all disturbed areas must be stabilized and BMPs removed if appropriate.

DRAFT

KING COUNTY, WASHINGTON
SURFACE WATER DESIGN MANUAL

REFERENCE 8

PLAN REVIEW FORMS AND WORKSHEETS

8-A Technical Information Report (TIR) Worksheet

8-B Offsite Analysis Drainage System Table

8-C Water Quality Facility Sizing Worksheets

8-D Flow Control and Water Quality Facility Summary Sheet and Sketch

8-E CSWPPP Worksheet Forms

8-F Adjustment Application Form and Process Guidelines

8-G Dedication and Indemnification Clause - Final Recording

8-H Bond Quantities Worksheet

8-I Maintenance and Defect Agreement

8-J Declaration of Covenant

8-K Drainage Release Covenant

8-L Drainage Easement

8-M Flow Control BMP Covenant

8-N Impervious Surface Limit Covenant

8-O Clearing Limit Covenant, and

8-P River Protection Easement

DRAFT

KING COUNTY, WASHINGTON
SURFACE WATER DESIGN MANUAL

REFERENCE 8-A

TECHNICAL INFORMATION REPORT (TIR) WORKSHEET

DRAFT

TECHNICAL INFORMATION REPORT (TIR) WORKSHEET

Part 1 PROJECT OWNER AND PROJECT ENGINEER

Project Owner _____

Phone _____

Address _____

_____

Project Engineer _____

Company _____

Phone _____

Part 2 PROJECT LOCATION AND DESCRIPTION

Project Name _____

DDES Permit # _____

Location Township _____

Range _____

Section _____

Site Address _____

_____

Part 3 TYPE OF PERMIT APPLICATION

- ❑ Landuse Services
  Subdivison / Short Subd. / UPD
- ❑ Building Services
  M/F / Commerical / SFR
- ❑ Clearing and Grading
- ❑ Right-of-Way Use
- ❑ Other _____

Part 4 OTHER REVIEWS AND PERMITS

- ❑ DFW HPA
- ❑ COE 404
- ❑ DOE Dam Safety
- ❑ FEMA Floodplain
- ❑ COE Wetlands
- ❑ Other _____
- ❑ Shoreline Management
- ❑ Structural Rockery/Vault/_____
- ❑ ESA Section 7

DRAFT

Part 5 PLAN AND REPORT INFORMATION

Technical Information Report

Type of Drainage Review (circle): Full / Targeted / Large Site

Date (include revision dates): _____ _____

Date of Final: _____

Site Improvement Plan (Engr. Plans)

Type (circle one): Full / Modified / Small Site

Date (include revision dates): _____ _____

Date of Final: _____

Part 6 ADJUSTMENT APPROVALS

Type (circle one): Standard / Complex / Preapplication / Experimental / Blanket

Description: (include conditions in TIR Section 2)

_____

_____

_____

Date of Approval: _____

TECHNICAL INFORMATION REPORT (TIR) WORKSHEET

Part 7 MONITORING REQUIREMENTS

Monitoring Required: Yes / No

Start Date: _____

Completion Date: _____

Describe: _____

Part 8 SITE COMMUNITY AND DRAINAGE BASIN

Community Plan : _____

Special District Overlays: _____

Drainage Basin: _____

Stormwater Requirements: _____

Part 9 ONSITE AND ADJACENT SENSITIVE AREAS

- ❑ River/Stream _____
- ❑ Lake _____
- ❑ Wetlands _____
- ❑ Closed Depression _____
- ❑ Floodplain _____
- ❑ Other _____
- ❑ Steep Slope _____
- ❑ Erosion Hazard _____
- ❑ Landslide Hazard _____
- ❑ Coal Mine Hazard _____
- ❑ Seismic Hazard _____
- ❑ Habitat Protection _____
- ❑ _____

DRAFT

Part 10 SOILS

Soil Type	Slopes	Erosion Potential
_____	_____	_____
_____	_____	_____
_____	_____	_____
_____	_____	_____

- ❑ High Groundwater Table (within 5 feet)
- ❑ Other _____
- ❑ Sole Source Aquifer
- ❑ Seeps/Springs

❑ Additional Sheets Attached

TECHNICAL INFORMATION REPORT (TIR) WORKSHEET

Part 11 DRAINAGE DESIGN LIMITATIONS	
REFERENCE	LIMITATION / SITE CONSTRAINT
❑ Core 2 – Offsite Analysis	_____
❑ Sensitive/Critical Areas	_____
❑ SEPA	_____
❑ Other	_____
❑ _____	_____
❑ Additional Sheets Attached	

Part 12 TIR SUMMARY SHEET (provide one TIR Summary Sheet per Threshold Discharge Area)	
Threshold Discharge Area: (name or description)	
Core Requirements (all 8 apply)	
Discharge at Natural Location	Number of Natural Discharge Locations:
Offsite Analysis	Level: 1 / 2 / 3 dated:_____
Flow Control (incl. facility summary sheet)	Level: 1 / 2 / 3 or Exemption Number _____ Small Site BMPs _____
Conveyance System	Spill containment located at: _____
Erosion and Sediment Control	ESC Site Supervisor: Contact Phone: After Hours Phone:
Maintenance and Operation	Responsibility: Private / Public If Private, Maintenance Log Required: Yes / No
Financial Guarantees and Liability	Provided: Yes / No
Water Quality (include facility summary sheet)	Type: Basic / Sens. Lake / Enhanced Basicm / Bog or Exemption No. _____ Landscape Management Plan: Yes / No
Special Requirements (as applicable)	
Area Specific Drainage Requirements	Type: CDA / SDO / MDP / BP / LMP / Shared Fac. / None Name: _____
Floodplain/Floodway Delineation	Type: Major / Minor / Exemption / None 100-year Base Flood Elevation (or range): _____ Datum:
Flood Protection Facilities	Describe:
Source Control (comm./industrial landuse)	Describe landuse: Describe any structural controls:

DRAFT

TECHNICAL INFORMATION REPORT (TIR) WORKSHEET

Oil Control	High-use Site: Yes / No Treatment BMP: _____ Maintenance Agreement: Yes / No with whom? _____
Other Drainage Structures	
Describe:	

Part 13 EROSION AND SEDIMENT CONTROL REQUIREMENTS		
MINIMUM ESC REQUIREMENTS DURING CONSTRUCTION		MINIMUM ESC REQUIREMENTS AFTER CONSTRUCTION
❑ Clearing Limits		❑ Stabilize Exposed Surfaces
❑ Cover Measures		❑ Remove and Restore Temporary ESC Facilities
❑ Perimeter Protection		❑ Clean and Remove All Silt and Debris Ensure Operation of Permanent Facilities
❑ Traffic Area Stabilization		❑ Flag Limits of SAO and open space preservation areas
❑ Sediment Retention		❑ Other _____
❑ Surface Water Control		
❑ Dust Control		
❑ Construction Sequence		

DRAFT

Part 14 STORMWATER FACILITY DESCRIPTIONS (Note: Include Facility Summary and Sketch)				
Flow Control	Type/Description		Water Quality	Type/Description
❑ Detention	_____		❑ Biofiltration	_____
❑ Infiltration	_____		❑ Wetpool	_____
❑ Regional Facility	_____		❑ Media Filtration	_____
❑ Shared Facility	_____		❑ Oil Control	_____
❑ Small Site BMPs	_____		❑ Spill Control	_____
❑ Other	_____		❑ Small Site BMPs	_____
			❑ Other	_____

TECHNICAL INFORMATION REPORT (TIR) WORKSHEET

Part 15 EASEMENTS/TRACTS		Part 16 STRUCTURAL ANALYSIS
❑ Drainage Easement ❑ Access Easement ❑ Native Growth Protection Covenant ❑ Tract ❑ Other		❑ Cast in Place Vault ❑ Retaining Wall ❑ Rockery > 4' High ❑ Structural on Steep Slope ❑ Other

Part 17 SIGNATURE OF PROFESSIONAL ENGINEER
I, or a civil engineer under my supervision, have visited the site. Actual site conditions as observed were incorporated into this worksheet and the attached Technical Information Report. To the best of my knowledge the information provided here is accurate. *Signed/Date*

DRAFT

KING COUNTY, WASHINGTON
SURFACE WATER DESIGN MANUAL

REFERENCE 8-B

OFFSITE ANALYSIS
DRAINAGE SYSTEM TABLE

DRAFT

OFF-SITE ANALYSIS DRAINAGE SYSTEM TABLE
SURFACE WATER DESIGN MANUAL, CORE REQUIREMENT #2

Basin: **Subbasin Name:** **Subbasin Number:**

Symbol	Drainage Component Type, Name, and Size	Drainage Component Description	Slope	Distance from site discharge	Existing Problems	Potential Problems	Observations of field inspector, resource reviewer, or resident
see map	Type: sheet flow, swale, stream, channel, pipe, pond; Size: diameter, surface area	drainage basin, vegetation, cover, depth, type of sensitive area, volume	%	¼ ml = 1,320 ft.	constrictions, under capacity, ponding, overtopping, flooding, habitat or organism destruction, scouring, bank sloughing, sedimentation, incision, other erosion		tributary area, likelihood of problem, overflow pathways, potential impacts

DRAFT

KING COUNTY, WASHINGTON
SURFACE WATER DESIGN MANUAL

REFERENCE 8-C

WATER QUALITY FACILITY SIZING WORKSHEETS

DRAFT

WETPOND SIZING WORKSHEET

2005 Surface Water Design Manual Sizing Method

Project name: _____

METHODS OF ANALYSIS (see p. 6-68)

Step 1) Determine volume factor *f*.

Basic size? f = 3 Consult WQ requirements(Section1.2.8)

Large size? f = 4.5 to determine if basic or large size needed

Step 2) Determine rainfall *R* for mean annual storm.

Rainfall (R) _____ (feet) Required from Figure 6.4.1.A

Step 3) Calculate runoff from mean annual storm

$V_r = (0.9A_i + 0.25A_{tg} + 0.10A_{tf} + 0.01\ A_{og})$ X R

A_i=	tributary area of impervious surface	_____	(sf)	Determine now
A_{tg}=	tributary area of till grass	_____	(sf)	Determine now
A_{tf} =	tributary area of till forest	_____	(sf)	Determine now
A_{og}=	tributary area of outwash grass	_____	(sf)	Determine now
R =	rainfall from mean annual storm	_____	(ft)	From Step 2
V_r =	volume of runoff from mean annual storm	_____	(cf)	

Step 4) Calculate wetpool volume

$V_b = f\ V_r$

f =	Volume factor	_____	(unitless)	From Step 1
V_r =	volume runoff, mean annual storm		(cf)	From Step 3
V_b =	Volume of the wetpool		(cf)	

Step 5) Determine wetpool dimensions

a) Determine geometry of first cell

Volume in first cell	_____	(cf)	25-35% of total
Depth ***h*** 1st cell (minus sed. stor.)	_____	(ft)	See Section 6.4.1.2

Determine horizontal xs area at mid-depth using Amid = V1st/h

Amid	_____	(sf)
Mid-width	_____	(ft)
Mid-length	_____	(ft)

Determine horizontal xs area at surface

Z = Side slope length: __(H):	1(V)	(ft)	3:1 recommended
2(*h*/2 x Z) =	_____	(ft)	

Find top dimensions by adjusting for shape geometrics

Top width	_____	(ft)
Top length	_____	(ft)
A_{top} =	_____	(sf)

DRAFT

b) Determine geometry of second cell

Volume in second cell	_____	(cf)	Must be 65 - 75%
Depth ***h*** of 2nd cell	_____	(ft)	See Section 6.4.1.2

Determine horizontal xs area at mid-depth using $A_{mid} = V_{2nd}/h$

A_{mid}	_____	(sf)	
Mid-width	_____	(ft)	
Mid-length	_____	(ft)	Used to check L:W

Determine xs-area at surface

Z = Side slope length: __(H): 1(V)	_____	(ft)	3:1 recommended
2(*h*/2 x Z) =	_____	(ft)	
Top width	_____	(ft)	
T_{top} length	_____	(ft)	
A_{top} =	_____	(sf)	
Adjust cell 2 width to match cell 1	_____	(ft)	
Adjust cell 2 length using A_{top}	_____	(ft)	

Geometry check: overall pond L : W at mid depth = 3 : 1

Pond width (mid-depth)	_____	(ft)
Cell 1 length (mid-depth)	_____	(ft)
Cell 2 length (mid-depth)	_____	(ft)
Pond length (mid-depth) = cell 1 + 2	_____	(ft)
	_____	
Lmid : Wmid =	_____	

DRAFT

Step 6) Design rest of pond (see Criteria p. 6-72)

Internal berm
Inlet & Outlet
Primary overflow
Access
Other Design Details (Sections 6.2.2, p. 6-18, 6.2.3, p. 20 and 6.2.4, p. 6-22)
- Sequence of Facilities
- Setbacks
- Sideslopes, fencing, embankment
- Liners

Total wetland surface area estimate

Surface area 1st cell + 2nd cell + area for internal berm + area for access ramp

= _____
= _____
= _____ sf

Plus setbacks, access roads, 100-yr conveyance

STORMWATER WETLAND SIZING WORKSHEET
2005 Surface Water Design Manual Sizing Method

Project name: _____

METHODS OF ANALYSIS (see p. 6-86)

Step 1) Determine volume factor *f*.

Use basic size f = 3 Consult WQ requirements(Section1.2.8)

Step 2) Determine rainfall *R* for mean annual storm.

Rainfall (R) _____ (feet) Required from Figure 6.4.1.A

Step 3) Calculate runoff from mean annual storm

$V_r = (0.9A_i + 0.25A_{tg} + 0.10A_{tf} + 0.01\ A_{og})\ X\ R$

A_i=	tributary area of impervious surface	_____	(sf)	Determine now
A_{tg}=	tributary area of till grass	_____	(sf)	Determine now
Atf =	tributary area of till forest	_____	(sf)	Determine now
A_{og}=	tributary area of outwash grass	_____	(sf)	Determine now
R =	rainfall from mean annual storm	_____	(ft)	From Step 2
V_r =	volume of runoff from mean annual storm	_____	(cf)	

Step 4) Calculate volume of "template" wetpool

$V_b = f\ V_r$

f =	Volume factor	3	(unitless	From Step 1
V_r =	volume runoff, mean annual storm		(cf)	From Step 3
V_b =	Volume of the "template" wetpool		(cf)	

Step 5) Calculate required wetland surface area

$A_{top} = V_b/3$ _____ (A_{top} = surface area of both cells)

template V_b =	_____	(cf)	From step 4
Atop =		(sf)	"Sizing" depth is 3 ft (see step 7, p. 6-87)

Step 6) Determine wetland cell dimensions same as steps 7 & 8, stormwater wetland)

a) Determine geometry of first cell

V_r from step 3 = volume 1st cell	_____	(cf)	
Depth ***h*** 1st cell (minus sed. stor.)	_____	(ft)	Note actual cell depth may be from 4 to 8 ft

DRAFT

Determine horizontal xs area at mid-depth using Amid = V1st/h

A_{mid}	_____	(sf)
Mid-width	_____	(ft)
Mid-length	_____	(ft)

Determine horizontal xs area at surface

Z = Side slope length: __(H): 1(V)	_____	(ft)	3:1 recommended
2(*h*/2 x Z)=	_____	(ft)	

Find top dimensions by adjusting for shape geometrics

Top width	_____	(ft)
Top length	_____	(ft)
A_{T1} =	_____	(sf)

b) Determine geometry of second cell

Wetland surface area A_{top}	_____	(sf)	From step 5
Surface area of cell 2	_____		A_{top} - A_{T1}
Depth ***h*** of 2nd cell	varies, 1.5' avg		See Table 6.4.3.A and Criteria #8 p. 6-88

DRAFT

Step 7) Choose plants for wetland cell

See recommendations in Table 6.4.1.A, p. 6-75

Step 8) Design rest of pond (See p. 6-87 for Criteria))

Internal berm
Inlet & Outlet
Primary overflow
Access
Other Design Details (Sections 6.2.2, p. 6-18, 6.2.3, p. 20 and 6.2.4, p. 6-22)
- Sequence of Facilities
- Setbacks
- Sideslopes, fencing, embankment
- Liners

Total pond surface area estimate

Surface area 1st cell + 2nd cell + area for internal berm + area for access ramp

= _____
= _____
= [ ] sf

_____ Plus setbacks, access roads, 100-yr conveyance

BIOFILTRATION SWALE WORKSHEET
2005 Surface Water Design Manual Sizing Method

Project: _____

METHODS OF ANALYSIS (Section 6.3.1.1)

Step 1) Calculate design flows

Biofiltration swales generally precede other water quality facilities (See menus in 6.1)

Design flows depend on sequence with detention facility. (Section 6.2.1)

Preceding detention	Qwq = 60% 2-yr, developed, KCRTS flow with 15-min time step
Following detention	Qwq = 2-yr release rate from detention facility

If no high flow bypass	$Q_{100\text{-}yr}$	_____	(cfs)	High flows bypass or flow through (6.3.1.1)
	$Q_{25\text{-}yr}$	_____	(cfs)	See 3.2.2 KCRTS/Runoff files Method
	$Q_{2\text{-}yr}$	_____	(cfs)	"
Water quality design flow	Q_{wq}	_____	(cfs)	"

Rainfall Region: Seatac or Landsburg?	_____		See Figure 3.2.2.A
Soil Type: Till or outwash?	_____		See Table 3.2.2 B
Forest	_____	(acres)	Areas draining to swale (3.2.2)
Pasture	_____	(acres)	"
Grass	_____	(acres)	"
Wetland	_____	(acres)	"
Impervious	_____	(acres)	"
Scale Factor:	_____		See Figure 3.2.2.A
Time Step: 15-min	*15-min*		Required "15 min" (6.2.1)
Data Type: Reduced or historic?	_____		Recommend "Reduced" (3.2.2.1)

DRAFT

Step 2) Calculate swale bottom width

$$b = \frac{Q_{wq}\, n_{wq}}{1.49\, y^{1.67}\, s^{0.5}}$$

b=	bottom width of swale	_____	(ft)	Simplified Manning's formula
Q_{wq}=	water quality design flow	_____	(cfs)	Calculated in Step 1
n_{wq} =	Manning's roughness coefficient	*0.20*		Required 0.20
y =	design flow depth	_____	(ft)	Mowed 2 in. (0.17ft), Rural 4 in. (0.33ft)
s =	longitudinal slope, along flow	_____	(feet/ft)	

If the bottom width is calculated to be between 2 and 10 feet, proceed to Step 3.
If bottom width is less than 2 feet, increase width to 2 feet and recalculate the design flow depth (y).
If bottom width is more than 10 feet: increase longitudinal slope (s), increase design flow depth (y), install flow divider and flow spreader, or relocate swale after detention facility

Step 3) Determine design flow velocity

$v_{wq} = Q_{wq}/A_{wq}$	design flow velocity	_____	(fps)	Flow Continuity Eq.
A_{wq}=	$by+Zy^2$	_____	(sf)	Cross-sectional area at design depth
Z=	side slope length per unit height	_____	(feet/ft)	Select now

If the velocity exceeds 1.0 foot per second, go back to Step 2 and modify longitudinal slope, bottom width, or depth.
If the velocity is less than 1.0 foot per second, proceed to step 4.

Step 4) Calculate swale length

$L = 540\ v_{wq}$ = swale length		_____	(ft)	
540 =	hydraulic residence time	_____	(s)	
v_{wq}=	design flow velocity	_____	(fps)	Calculated in Step 3

If the length is less than 100 feet, increase the length to 100 feet, leaving the bottom width unchanged.
If the swale length can be accommodated on the site, proceed to Step 6.
If the length is too long for the site, proceed to Step 5.

Step 5) Adjust swale layout to fit on site.

Reduce swale length and increase bottom width to provide an equivalent top area.

$A_{top} = (b_i + b_{slope})L_i = (b_f + b_{slope})L_f$		_____	(sf)	Calculate top area at WQ design depth
b_f=	increased bottom width	_____	(ft)	Select now
b_{slope}=	2Zy (ft) top width above sides	_____	(ft)	
L_f=	reduced swale length	_____	(ft)	Select now; Required minimum 100 ft

Go to Step 3 and recalculate design flow velocity (v) using b_f.
Recalculate to Assure the 9 minute retention

Step 6) Provide conveyance capacity for flows higher than Qwq

Meet conveyance requirements of Section 1.2.4. and check conveyance and velocity of high flows.

A) Q_c =	$1.49/n_c \quad A_c R_c^{0.67} s^{0.5}$	_____	(cfs)	Manning's Eq.; 100-yr or 25-yr flow in Step 1
n_c =	Manning's roughness coefficient	_____		Manning's "n" from Table 4.4.1 B
A_c=	$by_c + Zy_c^2$	_____	(sf)	Cross sectional area
R_c=	$A_c/(b+2y_c(Z^2+1)^{0.5})$	_____	(ft)	Hydraulic Radius
s =	longitudinal slope, along flow	_____	(ft/ft)	Selected in Step 2
y_c=	depth of 25-yr or 100-yr flows	_____	(ft)	Calculate now
B) $v_{100} = Q_{100}/A_{100}$		_____	(fps)	

If v_{100} exceeds 3.0 feet per second, return to Step 2 and increase the bottom width or flatten slope.

DRAFT

Size Summary

Land area is needed for the channel, access, setbacks, and, if necessary, area to convey high flows.

Atop= Water surface at conveyance depth_____ (sf)

Cross section includes depth, channel slope x length, and, if necessary, underdrain and high flows.

Slope times length= _____ (ft) From Steps 3, 4 and 6

OTHER CRITERIA (Section 6.3.1.2)

Swale Geometry
Water Depth
Flow Velocity, Energy Dissipation and Flow Spreading
Underdrains
Swale Divider
Access
Soil and plantings
Liners (Section 6.2.4)
Setbacks (Section 6.2.3)

FILTER STRIP WORKSHEET
2005 Surface Water Design Manual Sizing Method

Project: _____

METHODS OF ANALYSIS (Section 6.3.1.1)

Step 1) Calculate design flows

Filter strips usually precede other water quality facilities (See menus in 6.1)

Two-year flow	$Q_{2\text{-}yr}$	_____	(cfs)	See 3.2.2 KCRTS Method
Water quality design flow	Q_{wq}	_____	(cfs)	"

Step 2) Calculate design flow depth

Q_{wq}=	water quality design flow	_____	(cfs)	Calculated in Step 1
n_{wq} =	Manning's roughness coefficient	_____		Use 0.35 or 0.45, see p. 6-59
W =	width of strip along imperv.	_____	(ft)	Determine now
s =	longitudinal slope along path	_____	(feet/ft)	Determine now
$d_f = \left[\frac{Q_{wq}\, n_{wq}}{1.49\, Ws^{0.5}}\right]^{0.6}$	design flow depth	_____	(ft)	Manning's formula, re-arranged

If the design flow depth is greater than I inch (0.083 ft), the flow must reduced, the strip width must be increased, or a different WQ facility must be used.

CHECK: _____ (ft) < 0.083 ft, OK

Step 3)Calculate the design flow velocity through the strip

Q_{wq}=	_____	(cfs)	From step 1
W =	_____	(ft)	From step 2
d_f =	_____	(ft)	From step 2
$V_{wq} = Q_{wq}/Wd_f$	_____	(fps)	Flow Continuity Eq. w/ Wd_f for A

If V_{wq} exceeds 0.5 f/s, a filter strip may not be used. Redesign site to use a gentler longitudinal slope, or use another WQ facility.

CHECK: _____ (fps) < 0.5 fps, OK

Step 4) Calculate length of filter strip

hydraulic residence time =	540	(s)	Required 9 minutes
v_{wq}= design flow velocity	_____	(fps)	Calculated in Step 3
L= 540 v_{wq}	_____	(ft)	

Size Summary

Land area is needed for the strip, access, & area outside the treatment area to convey high flows

Other Criteria

Flow spreading & energy dissipation

Access

Soil amendment

Planting requirements

Liners (Section 6.2.4)

Recommended design features p. 6-61

DRAFT

SAND FILTER SIMPLE SIZING METHOD WORKSHEET
2005 Surface Water Design Manual Sizing Method

Project: _____

METHODS OF ANALYSIS (Section 6.5.2.1), Simple Sizing Method

Step 1) Determine whether a basic or large sand filter is needed.

See Core Requirement 8 of Section 1.2.8.

Basic or Large Sand Filter?	_____		Consult water quality menus in Section 6.1

Step 2) Determine rainfall region and regional scale factor.

Rainfall Region: Landsburg or Seatac?	_____	(unitless)	Required Figure 3.2.2.A
Regional Scale Factor:	_____	(unitless)	"

Step 3) Determine maximum depth of water above sand filter

d= maximum water depth above sand	_____	(ft)	Select now

Step 4) Determine site characteristics

For the simple sizing method, pasture is assumed grass and wetlands are assumed impervious.

Soil Type: Till or Outwash?		_____		See Table 3.2.2 B
T_i=	tributary area of impervious surface	_____	(acres)	Section 3.2.2.1
T_{tg}=	tributary area of till grass	_____	(acres)	"
T_{og}=	tributary area of outwash grass	_____	(acres)	"
Forest areas are ignored		_____	(acres)	

DRAFT

Step 5) Calculate minimum required surface area for sand filter

A_{sf}= 0.7 $C_s(T_iA_i+T_{tg}A_{tg}+T_{og}A_{og})$

A_{sf}=	sand filter area	_____	(sf)	
0.7=	adjustment factor for routing effect	_____	(unitless)	
C_s=	regional scale factor	_____	(unitless)	From Step 2
T_i=	tributary area of impervious	_____	(acres)	From Step 4
T_{tg}=	tributary area of till grass	_____	(acres)	"
T_{og}=	tributary area of outwash grass	_____	(acres)	"
A_i=	filter area for impervious	_____	(sf/acre)	Table 6.5.2.A, Impervious column
A_{tg}=	filter area for till grass	_____	(sf/acre)	Table 6.5.2.A, Till Grass column
A_{og}=	filter area for outwash grass	_____	(sf/acre)	Table 6.5.2.A, Outwash Grass column

Step 6) Size the underdrain system

* The design criteria in "underdrain systems"(6.5.2.2) can be used in lieu of analyzing conveyance capacity for feeder pipes.
* The collector pipe, collecting flows from the underdrain system, shall be sized to convey the 2-year 15-minute peak flow with one foot of head above the invert of the upstream end of the collector pipe. Capacity can be checked using the "KCBW" standard step back water program.

KCRTS 2-year developed peak flow	_____	(cfs)	See Section 3.2.2
Rainfall Region: Seatac or Landsburg?	_____		See Figure 3.2.2.A
Soil Type: Till or outwash?	_____		See Table 3.2.2 B
Forest	_____	(acres)	Areas draining to swale (3.2.2)
Pasture	_____	(acres)	"
Grass	_____	(acres)	"
Wetland	_____	(acres)	"
Impervious	_____	(acres)	"
Scale Factor:	_____		See Figure 3.2.2.A
Time Step: hourly or 15-min?	*15-min*		Required "15 min" (6.2.1)
Data Type: Reduced or historic?	_____		Recommend "Reduced" (3.2.2.1)

Size Summary: Land area, Volume, and Cross Section

The land needed includes area for the pond, berms, access, and setbacks.

A_{top}= Pond top area, for Square, $(A_{sf}^{0.5}+2dZ)^2$	_____	(sf)	Calculate area at top of water
A_{sf}= sand filter area	_____	(sf)	From Step 5
d= maximum water depth above sand	_____	(ft)	From Step 3
Z= side slope length per unit height	_____	(feet/ft)	Select now (Horizontal/Vertical)

Total volume equals volume of ponded water (V_{wq}) plus volume to convey the 100-yr flow.

$V_{wq}=(A_{top}+A_{sf})d/2$ ponded water volume _____ (ft^3)

Cross section includes underdrain system, sand depth (1.5 ft), and pond depth ("d," max 6 ft)

Pond depth _____ (ft)

DRAFT

OTHER DESIGN DETAILS (Section 6.5.2.2)

Pretreatment, Flow Spreading, Energy Dissipation
Overflow and Bypass Structures
Filter Composition and Specifications
Underdrain Systems
Grass Cover
Access Roads
Sequence of Facilities (Section 6.2.2)
Setbacks, Slopes, and Embankments (Section 6.2.3)
Liners (Section 6.2.4)
Presettling (Section 6.5.1)

SAND FILTER DETAILED KCRTS ROUTING METHOD WORKSHEET

2005 Surface Water Design Manual

Project: _____

METHODS OF ANALYSIS (Section 6.5.2.1) Detailed KCRTS Routing Method

Step 1) Determine whether a basic or large sand filter is needed.

Basic or Large Sand Filter?	_____		See Section 1.2.8 (map) and Section 6.1(menus)
%runoff volume to be treated	_____		90% for basic and 95% for large

Step 2) Determine rainfall region and regional scale factor.

Rainfall Region: Landsburg or Seatac?	_____	(unitless)	Required Figure 3.2.2.A
Regional Scale Factor:	_____	(unitless)	"

Step3) Create inflow time series

If the sand filter is upstream of detention, the time series is that of the developed site.

If the sand filter is downstream of detention, the time series is that leaving the detention pond.

In KCRTS at the main menu, select "CREATE a new time series" to generate the inflow time series

Select project location	_____		Seatac or Landsburg
Enter Till Forest	_____	(acres)	
Enter Till Pasture	_____	(acres)	
Enter Till Grass	_____	(acres)	
Enter Outwash Forest	_____	(acres)	
Enter Outwash Pasture	_____	(acres)	
Enter Outwash Grass	_____	(acres)	
Enter Wetlands	_____	(acres)	
Enter Impervious	_____	(acres)	
Enter scale factor	_____		0.8 to 1.1
Enter time step: 15-min	_____		
Enter data type: Reduced or historic	_____		
Select "Compute total area"	_____		
Enter time series file name	*BG-IN1*		Name of inflow time series, default *.TSF

Select "Compute time series", Overwrite file, press "F10" to view information.

Press "Enter" to return to main menu

DRAFT

Step 4) Determine the design overflow volume

For off-line (high flows bypass the facility) sand filters the design overflow volume is zero and a flow splitter diverts flows above 60% of the 2-yr peak discharge 15 min time steps.

For the on-line (all flows go through the sand filter pond) sand filters, the ……..

On-line or off-line sand filter? _____

At the KCRTS main menu, select "Enter the analysis TOOLS module," then "Compute VOLUME discharge"

Enter time series file	*BG-IN1*		Inflow hydrograph previously named
Enter output time series file	*BG-IN1*		Name data file, default *.PRN
Enter start date	*10/1/0 0:00*		Required 10/1/0 0:00
Enter end date	*9/30/8 23:59*		Required 9/30/8 23:59
Select "Extract discharge volume"			
Note "Discharge Volume" (V_d) results	_____	(acft)	Inflow volume
% runoff volume to overflow ($\%V_{rf}$)	_____	(%)	10% for basic; 5% for large (Step 1)
Calc. design overflow volume = $\%V_{rf} * V_d$	_____	(acft)	Maximum overflow volume

Select "Save to BG-IN1.PRN", then select "Return to Previous Menu"

Step 5) Define sand filter modeling parameters and Step 6) Size the sand filter

In KCRTS at the main menu, select “Size a Facility”

Enter R/D Facility (filename)	*BG-SF1*		Automatically *.RDF
Switch to “Manual” Design Technique			
Select “Create a new R/D Facility," then select “Infiltration Pond”			
Enter side slope			Horizontal component
Enter bottom area		(sqft)	
0r bottom length (ft)			
bottom width (ft)			
Enter effective storage depth before overflow		(ft)	
Enter Elevation at 0 stage		(ft)	
Enter Vertical permeability		(min/in)	
Toggle to desired bottom surface			Permeable Required
Toggle to desired side surface			Impermeable Required
Enter Riser Head		(ft)	
Enter Riser Diameter		(in)	12-36" See 6.5.2.2 and 5.3.1.1
Enter Number of orifices			
Select top of riser	*flat*		
Select "Point of Compliance"			
Enter inflow time series name	*BG-IN1*		
Select “Return to Facility Edit”			
Skip Test Hydrograph List and Define Riser Orifices and Notch			
Select "Save to *.rdf"			

Step 7) Route inflow time series through sand filter and compare volumes

Select “MODIFY auto Analysis setup”

Toggle to "Skip Peaks" from "Calculate Peaks"		
Toggle to "Do not Notify" from "Notify"		
Leave Duration Calcs? Prompt at default "Skip Durations"		
Toggle to "Calculate Volume" from "Skip Volume"		
Select “Edit peak/Duration/Volume Information”		
Enter start date	*10/1/0 0:00*	Required 10/1/0 0:00
Enter end date	*9/30/8 23:59*	Required 9/30/8 23:59
Select “Return to facility Design Menu”		
Select "OVERWRITE File"		

Select “Route Time series & perform auto analysis”

Press “F10” to display routing data, then press return again for volume calculation

Press “F10” to view volume results when R/D Facility menu displays.

Press "Enter" to return to R/D facility menu.

KCRTS will display the time series flow volume. Compare the discharge volume with design overflow volume calculated in Step 4. If outflow volumes exceed design, the filtered volumes do not meet the treatment goal requirement and increase sand area and/or pond volume and route again. If outflow volumes significantly exceed design, decrease sand area and/or pond volume and route again. If outflow volumes do not exceed design, the treatment goal requirements are met.

Sand Filter Area (sqft)	*Discharge Volume (ac-ft)* *Target=*

To Adjust Sand Filter Geometry, Re-route Flows and Re-check Flow Volumes

Select “Edit facility” at R/D Facility menu

Edit data to change facility, then select “save to *.rdf”

Select "Overwrite File"

Select “Route time series and perform auto analysis”

DRAFT

Step 8) Size the underdrain system

* For feeder pipes, the design criteria in "underdrain systems"(6.5.2.2) can be used in lieu of analysis
* The collector pipe shall be sized to convey the 2-year 15-minute peak flow with 1' of head above the upstream invert. Capacity can be checked using the "KCBW" standard step back water program.

KCRTS dev., 2-yr peak flow (15-min steps) _____ (cfs)

Size Summary: Volume, Land area, and Cross Section

The land needed includes area for the pond, berms, access, and setbacks (6.2.3).

A_{top}=Pond top area. If Square, $(A_{sf}^{0.5}+2dZ)^2$ _____ (sf) "A_{sf}" from Step 5 and "d" from Step 3

Z= side slope length per unit height _____ (unitless) Select now

Total volume equals volume of ponded water (V_{wq}) plus volume to convey the 100-yr flow.

$V_{wq}=(A_{top}+A_{sf})d/2$ ponded water volume _____ (ft^3)

Cross-section includes underdrain system, sand depth (1.5 ft), pond depth ("d," max 6 ft), and freeboard

DRAFT

WETVAULT SIZING WORKSHEET
2005 Surface Water Design Manual Sizing Method

Project name: _____

METHODS OF ANALYSIS

Step 1) Determine volume factor *f*.

Basic size f = 3 Consult WQ requirements(Section1.2.8)

Step 2) Determine rainfall *R* for mean annual storm.

Rainfall (R) _____ (feet) Required from Figure 6.4.1.A

Step 3) Calculate runoff from mean annual storm

$V_r = (0.9A_i + 0.25A_{tg} + 0.10A_{tf} + 0.01\ A_{og}) \times R$

A_i=	tributary area of impervious surface	_____	(sf)	Determine now
A_{tg}=	tributary area of till grass	_____	(sf)	Determine now
Atf =	tributary area of till forest	_____	(sf)	Determine now
A_{og}=	tributary area of outwash grass	_____	(sf)	Determine now
R =	rainfall from mean annual storm	_____	(ft)	From Step 2
V_r =	volume of runoff from mean annual storm	_____	(cf)	

Step 4) Calculate wetpool volume

$V_b = f\ V_r$

f =	Volume factor	3	(unitless)	From Step 1
V_r =	volume of runoff, mean annual storm	_____	(cf)	From Step 3
V_b =	Volume of the wetpool	_____	(cf)	

Step 5) Determine wetpool dimensions

a) Determine geometry of first cell

Volume in first cell	_____	(cf)	Must be 25 - 35%
Depth ***h*** 1st cell (minus sed. stor.)	_____	(ft)	See Section 6.4.1.2
Determine horizontal xs-area at surface			
Atop =	_____	(sf)	If square = take sqrt
Find top dimensions by adjusting for shape geometrics			
Dimension of 1st cell: width	_____	(ft)	
length	_____	(ft)	

b) Determine geometry of second cell

Volume in second cell	_____	(cf)	Must be 65 - 75%
Depth ***h*** of 2nd cell	_____	(ft)	See Section 6.4.1.2
Determine xs-area at surface			
Atop =	_____	(sf)	
Dimension of 2nd cell: width	_____		

DRAFT

Dimension of 2nd cell: length _____ (ft) If rectangular, short side = 24 ft to match cell 1

Geometry check: overall pond L : W at mid depth = 3 : 1

Cell 1 length (mid-depth) _____ (ft)

Cell 2 length (mid-depth) _____ (ft)

Vault length = cell 1 + 2 _____ (ft)

Vault width _____ (ft)

Lmid : Wmid = _____

Step 6) Design rest of vault (Section 6.4.2.1)

Internal baffle

Inlet & Outlet

Access

Effective area _____ (3.2.2.1)

Note 5'X10" access, grating and corner vent holes

Other Design Details (Sections 6.2.2, 6.2.3, and 6.2.4)

Sequence of Facilities

Setbacks

Sideslopes, fencing, embankment

SIZE SUMMARY: Surface area, change in elevation

Vault width _____ (ft)

Vault length _____ (ft)

Surface area _____ (sf)

Elevation change needed: _____ (ft)

DRAFT

SAND FILTER VAULT SIZING WORKSHEET
2005 Surface Water Design Manual Sizing Method

Name:

METHODS OF ANALYSIS (Section 6.5.2.1), Simple Sizing Method

Step 1) Determine whether a basic or large sand filter is needed.

See Core Requirement 8 (1.2.8) and the WQ applications map in the back of the design manual.

* Large sand filter -- an option in resource stream or sensitive lake areas, or partial option for sphagnum bog areas

* Basic sand filter -- an option for basic WQ treatment areas or part of a 2-3 facility treatment train for other areas

Basic, regionally significant resource stream, sensitive lake, or sphagnum bog area?	Basic	Water Quality Applications Map, manual back cover
Basic or Large Sand Filter?	Basic	Consult water quality menus in Section 6.1

Step 2) Determine rainfall region and regional scale factor.

Refer to the precipitation scaling map in Chapter 3, Figure 3.2.2.A.

Rainfall Region: Landsburg or Seatac?	_____	(unitless)	Required Figure 3.2.2.A
Regional Scale Factor:	_____	(unitless)	Required Figure 3.2.2.A

Step 3) Determine maximum depth of water above sand filter

Select maximum water storage depth above the surface of the filter depending on site topography.

d= maximum water depth above sand	_____	(ft)	Select now; maximum 6 feet (6.5.2.2)

Step 4) Determine site characteristics

For the simple sizing method, vegetated areas other than grass may be represented as grass.

Soil Type: Till or Outwash?		_____		See Table 3.2.2B
T_i=	tributary area of impervious surface	_____	(acres)	Roads, roofs, etc, See Table 3.2.2.1
T_{tg}=	tributary area of till grass	_____	(acres)	Landscaping and forest, See Table 3.2.2.1
T_{og}=	tributary area of outwash grass	_____	(acres)	Refer to Table 3.2.2.1

DRAFT

Step 5) Calculate minimum required surface area for sand filter

$A_{sf} = 0.7\ C_s(T_iA_i+T_{tg}A_{tg}+T_{og}A_{og})$

0.7=	adjustment factor for routing effec	0.7	(unitless)	
C_s=	regional scale factor	_____	(unitless)	From Step 2
T_i=	tributary area of impervious	_____	(acres)	From Step 4
T_{tg}=	tributary area of till grass	_____	(acres)	From Step 4
T_{og}=	tributary area of outwash grass	_____	(acres)	From Step 4
A_i=	filter area for impervious	_____	(sf/acre)	Table 6.5.2.A, Ai Impervious column "d"
A_{tg}=	filter area for till grass	_____	(sf/acre)	Table 6.5.2.A, Atg Till grass column "d"
A_{og}=	filter area for outwash grass	_____	(sf/acre)	Table 6.5.2.A, Outwash grass column "d"
A_{sf}=	sand filter area	[ ]	(sf)	

Step 6) Size the underdrain system

*Design criteria in "underdrain systems"(6.5.2.2) can be used or do capacity analysis for feeder pipes.

* The pipe collecting flows from the underdrain system shall be sized to convey the 2-yr 15-min. peak flow with one foot of head above the invert of the upstream end of the collector pipe. Capacity can be checked using the "KCBW" standard step back water program.

KCRTS developed, 2-year return period, 15-minute time step, peak flow	_____	(cfs)	See Section 3.2.2

Rainfall region: Seatac or Landsburg?	_____		See Step 2 or Figure 3.2.2.A
Scale Factor:	_____	(unitless)	See Step 2 or Figure 3.2.2.A
Time Step: hourly or 15-min?	_____		Required "15 min"
Data Type: Reduced or historic?	_____		"Reduced," (3.2.2.1)
Till grass	_____	(acres)	See Step 4 "T_{tg}"
Outwash grass	_____	(acres)	See Step 4 "T_{og}"
Impervious	_____	(acres)	See Step 4 "T_i"
Effective area	_____		(3.2.2.1)

Step 7) Determine presettling volume

Determine rainfall *R* for mean annual storm.

Rainfall (R) _____ (feet) Required from Figure 6.4.1.A

Calculate runoff from mean annual storm

$V_r = (0.9A_i + 0.25A_{tg} + 0.10A_{tf} + 0.01\ A_{og}) \times R$

A_i=	tributary area of impervious surface	_____	(sf)
A_{tg}=	tributary area of till grass	_____	(sf)
Atf =	tributary area of till forest	_____	(sf)
A_{og}=	tributary area of outwash grass	_____	(sf)
R =	rainfall from mean annual storm	_____	(ft)
V_r =	volume of runoff from mean annual storm	_____	(cf)

Calculate presettling volume

$V_b = f\ V_r$

f =	Volume factor	0.75	(unitless)
V_r =	volume of runoff, mean annual storm		(cf)
V_b =	Volume of the wetpool		(cf)

Calculate presettling cell size

Vault depth	_____	(ft)	
Vault area	_____	(sf)	Volume /cell depth
Vault width	_____	(ft)	Use 20' w for precast options
Vault length	_____	(ft)	

DRAFT

Size Summary: Surface area change in elevation

Total surface area equals sand bed area, surface area of presettling cell plus addtl for inlet/outlet pipes

Sand surface area	_____	(sf)	
Presettling surface area	_____	(sf)	
Outlet pipe area		(sf)	(3'X20')
Total surface area		(sf)	

The elevational change needed includes

sand depth	_____	(ft)	(required)
underdrain	_____	(ft)	(minimum)
Depth "d" above sand	_____	(ft)	(Depends on design)
Total fall needed:	_____	(ft)	

Other design criteria (Section 6.5.2.2)

Pretreatment, Flow Spreading, Energy Dissipation

Overflow and bypass structures

Filter Composition and specifications

Access to inlet, outlet, over sand bed

BAFFLE OIL/WATER SEPARATOR WORKSHEET
2005 Surface Water Design Manual Sizing Method

Project: _____

METHODS OF ANALYSIS (Section 6.6.2.1)

Step 1) Calculate design flows

Calculate flows on Design Flow and Design Volume worksheet and transfer results here.

Tributary area	_____	(sf)	
Water quality design flo Q_{wq}	_____	(cfs)	See 3.2.2 KCRTS/Runoff files Method

Step 2) Calculate the minimum vertical cross-sectional area

$A_c = Q/V_H$

$A_{c=}$	minimum cross-sectional area	_____	(sf)	
Q=	water quality design flow	_____	(cfs)	Step 1
$V_{H=}$	design horizontal velocit	0.008	(fps)	Using $V_H=15V_T$;V_T=0.033 fpm=0.00055 fps

Step 3) Calculate the width and depth of the vault

D= Ac/W

W=	width of vault	_____	(ft)	May be standard width
Ac=		_____	(sf)	from Step 2
D=	maximum depth	_____	(ft)	Minimum 3 ft; Maximum 8 ft

The computed depth D must meet a depth-to-width ratio r of between 0.3 and 0.5

Note: D = (rAc)0.5

W = D/r, where r = the depth-to-width ratio

D/W= _____

Step 4) Calculate the length of the vault

L= $FD(V_H/V_T)$

V_H=	horizontal velocity (ft/min)		Vh/Vt = 15
V_T=	oil droplet rise rate (ft/min)		
F=	turbulence and short-cir	1.65	select using VH/VT = 15; see Figure 6.6.2.A
D=	depth	_____ (ft)	from step 3

Therefore: L= 1.65 X 15 X D _____ (ft)

Step 5) Check the separator's length-to-width ratio.

L/W vault =	_____	the ratio of L/W must be 5 or greater
L/W forebay =	_____	L/W must be 3 or greater

Step 6) Compute and check that the proposed separator vault satisfies the minimum horizontal surface area A_H criterion.

DRAFT

A_H must be less than or = LW:

A_H=	(1.65Q/0.33)	_____	(sf)	
Q=		_____	(cfs)	Step 1
LW=		_____	(sf)	

Step 7) Compute and check the horizontal surface area of the vault forebay.

This area must be greater than 20 square feet p

A_F:A_{TI} > 1: 500

L=	length of vault	_____	(ft)	Step 4
$L_{F=}$	length of forebay	_____	(ft)	=L/3
W=		_____		Step 3
A_F=	forebay area = L_F x W	_____	(ft^2)	
A_{TI}=	Tributary Impervious Area	_____	(ft^2)	(1 acre = 43,560 ft^2)

Required min. area A_F (20 X A_{TI}/10,000) _____ (sf)

_____ (sf)

OR use ratio A_F:A_{TI} = _____ :500 If > 1:500, OK

Step 8) Design the flow splitter and high-flow bypass.

See Section 6.2.5 (p.6-27) for information on flow splitter design.

OTHER CRITERIA (Section 6.6.2)

General siting before other stormwater facilities (p. 6-147)
Baffle requirements (p. 6-148)
Inlet & outlet (p. 6-149)
Material requirements (p. 6-149)
Maintenance access (p. 6-149 to 6-150, also p. 5-37 to 5-38)

DRAFT

KING COUNTY, WASHINGTON
SURFACE WATER DESIGN MANUAL

REFERENCE 8-D

FLOW CONTROL AND WATER QUALITY FACILITY SUMMARY SHEET AND SKETCH

DRAFT

STORMWATER FACILITY SUMMARY SHEET

DDES Permit Number_____

(provide one Stormwater Facility Summary Sheet per *Natural Discharge Location*)

Overview:

Project Name _____Date_____

Downstream Drainage Basins

Major Basin Name _____

Immediate Basin Name _____

Flow Control:

Flow Control Facility Name/Number _____

Facility Location_____

If none,

Flow control provided in regional/shared facility (give location)_____

No flow control required_____ Exemption number _____

General Facility Information:

Type/Number of detention facilities:

_____ ponds

_____ vaults

_____ tanks

Type/Number of infiltration facilities:

_____ ponds

_____ tanks

_____ trenches

Control Structure Location _____

Type of Control Structure _____ Number of Orifices/Restrictions _____

Size of Orifice/Restriction: No. 1 _____

No. 2 _____

No. 3 _____

No. 4 _____

Flow Control Performance Standard _____

Live Storage Volume _____ Depth _____ Volume Factor of Safety _____

Number of Acres Served _____

Number of Lots _____

Dam Safety Regulations (Washington State Department of Ecology)

Reservoir Volume above natural grade _____

Depth of Reservoir above natural grade _____

Facility Summary Sheet Sketch

All detention, infiltration and water quality facilities must include a detailed sketch.
(11"x17" reduced size plan sheets may be used)

DRAFT

Water Quality:

Type/Number of water quality facilities/BMPs:

_____ biofiltration swale
(regular/wet/ or continuous inflow)

_____ combined detention/wetpond
(wetpond portion basic or large)

_____ combined detention/wetvault

_____ filter strip

_____ flow dispersion

_____ farm management plan

_____ landscape management plan

_____ oil/water separator
(baffle or coalescing plate)

_____ sand filter (basic or large)

_____ sand filter, linear (basic or large)

_____ sand filter vault (basic or large)
sand bed depth_____ (inches)

_____ stormwater wetland

_____ storm filter

_____ wetpond (basic or large)

_____ wetvault

_____ Is facility Lined?
If so, what marker is used above Liner?_____

_____ catch basin inserts: Manufacturer_____

_____ pre-settling pond

_____ pre-settling structure: Manufacturer_____

_____ high flow bypass structure (e.g., flow-splitter catch basin)

_____ source controls _____

DRAFT

Design Information

Water Quality design flow _____

Water Quality treated volume (sandfilter) _____

Water Quality storage volume (wetpool) _____

Facility Summary Sheet Sketch

All detention, infiltration and water quality facilities must include a detailed sketch.
(11"x17" reduced size plan sheets may be used)

KING COUNTY, WASHINGTON
SURFACE WATER DESIGN MANUAL

REFERENCE 8-E

CWSPPP WORKSHEET FORMS

DRAFT

BMP Implementation	Completed by:_____ Title:_____ Date:_____

Develop a plan for implementing each BMP. Describe the steps necessary to implement the BMP (i.e., any construction or design), the schedule for completing those steps (list dates), and the person(s) responsible for implementation.

BMPs	Description of Action(s) Required for Implementation	Scheduled Milestone and Completion Date(s)	Person Responsible for Action
Good Housekeeping	1.		
	2.		
	3		
Preventive Maintenance	1.		
	2.		
	3.		
	4.		
Spill Prevention and Emergency Cleanup	1.		
	2.		
	3.		
Inspections	1.		
	2.		
	3.		

DRAFT

BMPs	Description of Action(s) Required for Implementation	Schedule Milestone and Completion Date(s)	Person Responsible for Action
Source Control BMPs	1.		
	2.		
	3		
	4.		
	5.		
	6.		
	7.		
	8.		
Treatment BMPs	1.		
	2.		
	3.		
	4.		
Emerging technologies	1.		
	2.		
Flow Control BMPs	3.		
	4.		

DRAFT

Material Inventory

Completed by:_____

Title:_____

Date:_____

List materials handled, treated, stored, or disposed of at the project site that may potentially be exposed to precipitation or runoff.

Material	Purpose/Location	Quantity (Units)				Likelihood of contact with stormwater If Yes, describe reason		Past Spill or Leak	
		Used	Produced	Stored				Yes	No
		(indicate per/wk. or yr.)							

DRAFT

Potential Pollutant Source Identification	Completed by:_____ Title:_____ Date:_____

List all potential stormwater pollutants from materials handled, treated, or stored on-site.

Potential Stormwater Pollutant	Stormwater Pollutant Source	Likelihood of pollutant being present in your stormwater discharge. If yes, explain

DRAFT

List of Significant Spills and Leaks

Completed by:_____

Title:_____

Date:_____

List all spills and leaks of toxic or hazardous pollutants that were significant but are not limited to, release of oil or hazardous substances in excess of reportable quantities. Although not required, we suggest you list spills and leaks of non-hazardous materials.

Date (month/day/year)	Location (as indicated on site map)	Description				Response Procedure		Preventive Measure Taken
		Type of Material	Quantity	Source, If Known	Reason for Spill/Leak	Amount of Material Recovered	Material No longer exposed to Stormwater (Yes/No)	

DRAFT

Employee Training	Completed by:_____ Title:_____ Date:_____

Describe the annual training of employees on the SWPPP, addressing spill response, good housekeeping, and material management practices.

Training Topics 1.) LINE WORKERS	Brief Description of Training Program/Materials (e.g., film, newsletter course)	Schedule for Training (list dates)	Attendees
Spill Prevention and Response			
Good Housekeeping			
Material Management Practices			
2.) P2 TEAM:			
SWPPP Implementation			
Monitoring Procedures			

DRAFT

Pollution Prevention Team	Completed by: _____ Title: _____ Date: _____

Responsible Official:_____ Title:_____

Team Leader:_____ Office Phone:_____

Cell Phone #:_____

Pager #:_____

Responsibilities:

_____

_____

_____

(1)_____ Title:_____

Office Phone:_____

Pager #:_____

Cell Phone:_____

Responsibilities:

_____

_____

_____

(2)_____ Title:_____

Office Phone:_____

Pager #:_____

Cell Phone #:_____

Responsibilities:

_____

_____

_____

DRAFT

KING COUNTY, WASHINGTON
SURFACE WATER DESIGN MANUAL

REFERENCE 8-F

ADJUSTMENT APPLICATION FORM AND PROCESS GUIDELINES

DRAFT

King County
Department of Development and Environmental Services
900 Oakesdale Avenue Southwest
Renton, Washington 98055-1219

Surface Water Design Manual Requirements / Standards Adjustment* Request

Project Name:	DDES Project File No.: DDES Engineer/Planner Name:
Project Address:	Design Engineer: Phone:
Applicant/Agent: Phone:	Signature: Date:
Signature: Date:	Engineering Firm Name:
Address: City, State, Zip Code:	Address: City, State, Zip Code:

INSTRUCTIONS TO APPLICANT/DESIGN ENGINEER:

Please be sure to include all plans (T.I.R., if available), sketches, photos and maps that may assist in complete review and consideration of this adjustment request. Failure to provide all pertinent information may result in delayed processing or denial of your request. Please submit two complete copies of this request, application form, and applicable fee to the DDES Intake Counter, at 900 Oakesdale Avenue Southwest, Renton, Washington 98055-1219. For additional information, phone Randall Parsons, P.E., at (206) 296-7207.

REFER TO SECTION 1.4 IN CHAPTER 1 OF THE SURFACE WATER DESIGN MANUAL FOR ADJUSTMENTS

DESCRIPTION OF ADJUSTMENT REQUEST: ☐ Standard ☐ Complex ☐ Experimental ☐ Blanket
☐ Pre-application

APPLICABLE VERSION KCSWDM: ☐ 1990 (11/95) * ☐ 1998 (9/98) ☐ _____
* (Note: the term "variance" replaced by "adjustment")

APPLICABLE SECTION(S) OF STANDARDS:

JUSTIFICATION PER KCSWDM SECTION 1.4.2
☐ See attachments listed below.

AUTHORIZATION SIGNATURES:

DETERMINATION:
☐ Approval ☐ Conditional Approval (see below) ☐ Denial

☐ DNR/WLRD Approval Signed: _____ Date: _____ (Experimental & Blanket variances only)

DDES Staff Recommendation Signed: _____ Date: _____

Conditions of Approval:

☐ See attached Memo Dated: _____

DDES DIRECTOR/DESIGNEE:

DDES, Land Use Services Div., Engineering Review Supervisor: Signed: Date:	**DDES, Bldg. Serv. Div., Site Engineering & Planning Supervisor:** Signed: Date:

DRAFT

REFERENCE 8-F

ADJUSTMENT PROCESS GUIDELINES

1.0 PREAPPLICATION ADJUSTMENT PROCESS

This process is used when the applicant needs an adjustment decision to determine if a project is feasible or the results are needed to determine if a project is viable before funding a full application. Preapplication adjustment requests will be accepted when 1) an issue is raised or a potential constraint is identified at a preapplication conference with DDES, and 2) sufficient engineering information to evaluate the request is provided. A higher preapplication adjustment fee will apply to these requests, and any unused adjustment fee will be credited towards the permit application fee.

Steps in the processing of a preapplication adjustment shall include:

- A DDES preapplication conference is scheduled at which the applicant provides justification that a decision on the adjustment will effect viability of the project. An example could include a need to divert flows due to a downstream problem.

- King County may request additional information and site visits due to the limited data and lack of prior project review.

- A preapplication deposit is required and fee for review will be an hourly rate billing applied against the deposit. Any unused fees could be returned to the applicant. Any fees in excess of the deposit must be paid prior to the issuance of a decision.

- For approved preapplication adjustment, the applicant can apply that approval to the applied for permit proposal provided conditions of the approval are met, the proposal has not substantially changed and the applicable regulations have not changed. This will be determined by DDES.

DRAFT

The criteria for granting a preapplication adjustment are the same as for a Standard or Complex adjustment. However, preapplication adjustments will be tied by condition to the project proposal resented at the preapplication meeting. The appeal process is also the same as for a Standard adjustment or a Complex adjustment. This approval will expire 1 year after the approval date, unless a complete permit application is submitted and accepted.

2.0 EXPERMIENTAL DESIGN ADJUSTMENT PROCESS

This process is used for proposing new designs or methods different from those in the manual, that are not site specific, and where data sufficient to establish functional equivalence does not exist. Experimental design proposals will be submitted to DDES for processing review and recommendations and forwarded to DNR for review. These adjustments will incur a special review fee as adopted in the King County DDES fee ordinance. Experimental adjustments should be submitted prior to development permit application since they may take longer than a typical adjustment to review.

Upon approval of the adjustment by the DNR Division Manager, the application can use the design or method in a development proposal without applying for a site-specific adjustment. This type of adjustment is provided to encourage innovation on the part of the development community. It also can expedite the review and development of alternative designs for incorporation in future Manual updates.

Steps in the application for an Experimental Design Adjustment will include:

- The application for adjustment is preferably submitted prior to engineering plan review due to the extended review period that may occur. However, it may occur at any permit stage prior to final plan approval. If the review time is to exceed the time outlined in Section 1.4, staff will provide an estimate of the additional time necessary to complete the review within 10 working days of submittal of the adjustment.

- Review will follow the Standard or Complex adjustment procedure. DDES may forward to DNR without a recommendation.

- DDES will process and bill the applicant.

- Justification supporting comparable performance of the proposed system to a standard design is required. Where uncertainty or lack of supportive literature or performance testing exists, monitoring may be applicable with joint participation and funding between King County and the applicant.

DRAFT

Only a limited number of experimental adjustments for a particular facility or method will be granted. If the design proves successful, DNR and DDES may establish a blanket adjustment for the design until such time as it can be incorporated in the Design Manual by formal update. The appeal process is also the same as for a Standard adjustment or a Complex adjustment.

3.0 FEE REDUCTION

This process is used for adjustments that are determined to meet either of the conditions A or B identified below. The DDES Director or designee shall be responsible for making the determination for a fee reduction.

A. Minor adjustment requests that are defined as issues requiring no engineering review to determine appropriateness. These include:

- New or revised standard specifications for engineering and construction which are cited in the Manual (e.g., APWA standard specifications for public works construction, WSDOT standard specifications),
- Minor design alternatives that meet the stated intent in the Manual,
- Identified errors in the Manual.

B. Blanket Adjustments (See Reference Section 10-A Blanket Adjustments, for approved Blanket Adjustments).

DRAFT

KING COUNTY, WASHINGTON
SURFACE WATER DESIGN MANUAL

REFERENCE 8-G

DEDICATION AND INDEMNIFICATION CLAUSE – FINAL RECORDING

DRAFT

Sample Dedication and Indemnification Clause - Subdivision

KNOW ALL PEOPLE BY THESE PRESENTS that we, the undersigned owners of interest in the land hereby subdivided, hereby declare this plat to be the graphic representation of the subdivision made hereby, and do hereby dedicate to the use of the public forever all streets and avenues not shown as private hereon and dedicate the use thereof for all public purposes not inconsistent with the use thereof for public highway purposes, and also the right to make all necessary slopes for cuts and fills upon the lots shown thereon in the original reasonable grading of said streets and avenues, and further dedicate to the use of the public all the easements and tracts shown on this plat for all public purposes as indicated thereon, including but not limited to parks, open space, utilities and drainage unless such easements or tracts are specifically identified on this plat as being dedicated or conveyed to a person or entity other than the public, in which case we do hereby dedicate such streets, easements, or tracts to the person or entity identified and for the purpose stated.

Further, the undersigned owners of the land hereby subdivided, waive for themselves, their heirs and assigns and any person or entity deriving title from the undersigned, any and all claims for damages against King County, its successors and assigns which may be occasioned by the establishment, construction, or maintenance of roads and/or drainage systems within this subdivision other than claims resulting from inadequate maintenance by King County.

Further, the undersigned owners of the land hereby subdivided, agree for themselves, their heirs and assigns to indemnify and hold King County, its successors and assigns, harmless from any damage, including any costs of defense, claimed by persons within or without this subdivision to have been caused by alterations of the ground surface, vegetation, drainage, or surface or sub-surface water flows within this subdivision or by establishment, construction or maintenance of the roads within this subdivision. Provided, this waiver and indemnification shall not be construed as releasing King County, its successors or assigns, from liability for damages, including the cost of defense, resulting in whole or in part from the negligence of King County, its successors, or assigns.

DRAFT

This subdivision, dedication, waiver of claims and agreement to hold harmless is made with the free consent and in accordance with the desires of said owners.

IN WITNESS WHEREOF we set our hands and seals.

_____	_____
Name	Name
_____	_____
Name	Name
_____	_____
Name	Name

State of Washington
County of _____

I certify that I know or have satisfactory evidence that

_____

Signed the instrument and acknowledged it to be (his/her) free and voluntary act for the uses and purposes mentioned in the instrument.

Sample Dedication and Indemnification Clause – Short Subdivision

KNOW ALL PEOPLE BY THESE PRESENTS that we, the undersigned owners of interest in the land hereby short subdivided, hereby declare this short plat to be the graphic representation of the short subdivision made hereby, and do hereby dedicate to the use of the public forever all streets and avenues not shown as private hereon and dedicate the use thereof for all public purposes not inconsistent with the use thereof for public highway purposes, and also the right to make all necessary slopes for cuts and fills upon the lots shown thereon in the original reasonable grading of said streets and avenues, and further dedicate to the use of the public all the easements and tracts shown on this plat for all public purposes as indicated thereon, including but not limited to parks, open space, utilities and drainage unless such easements or tracts are specifically identified on this plat as being dedicated or conveyed to a person or entity other than the public, in which case we do hereby dedicate such streets, easements, or tracts to the person or entity identified and for the purpose stated.

Further, the undersigned owners of the land hereby short subdivided, waive for themselves, their heirs and assigns and any person or entity deriving title from the undersigned, any and all claims for damages against King County, its successors and assigns which may be occasioned by the establishment, construction, or maintenance of roads and/or drainage systems within this short subdivision other than claims resulting from inadequate maintenance by King County.

Further, the undersigned owners of the land hereby short subdivided, agree for themselves, their heirs and assigns to indemnify and hold King County, its successors and assigns, harmless from any damage, including any costs of defense, claimed by persons within or without this short subdivision to have been caused by alterations of the ground surface, vegetation, drainage, or surface or sub-surface water flows within this short subdivision or by establishment, construction or maintenance of the roads within this short subdivision. Provided, this waiver and indemnification shall not be construed as releasing King County, its successors or assigns, from liability for damages, including the cost of defense, resulting in whole or in part from the negligence of King County, its successors, or assigns.

DRAFT

This subdivision, dedication, waiver of claims and agreement to hold harmless is made with the free consent and in accordance with the desires of said owners.

IN WITNESS WHEREOF we set our hands and seals.

_____	_____
Name	Name
_____	_____
Name	Name
_____	_____
Name	Name

State of Washington
County of _____

I certify that I know or have satisfactory evidence that

_____

Signed the instrument and acknowledged it to be (his/her) free and voluntary act for the uses and purposes mentioned in the instrument.

KING COUNTY, WASHINGTON
SURFACE WATER DESIGN MANUAL

REFERENCE 8-H

BOND QUANTITIES WORKSHEET

DRAFT

Site Improvement Bond Quantity Worksheet

King County

Department of Development & Environmental Services
900 Oakesdale Avenue Southwest
Renton, Washington 98055-1219
206-296-6600 TTY 206-296-7217

For alternate formats, call 206-296-6600.

Project Name: _____ **Date:** _____

Location: _____ **Project No.:** _____

Activity No.: _____

Clearing greater than or equal to 5,000 board feet of timber?

_____ yes _____ no

If yes,

Forest Practice Permit Number: _____

(RCW 76.09)

Note: All prices include labor, equipment, materials, overhead and profit. Prices are from RS Means data adjusted for the Seattle area or from local sources if not included in the RS Means database.

DRAFT

Site Improvement Bond Quantity Worksheet

		Reference #	Unit Price	Unit	Quantity	# of Applications	Cost
EROSION/SEDIMENT CONTROL	**Number**						
Backfill & compaction-embankment	**ESC-1**		$ 5.62	CY			
Check dams, 4" minus rock	**ESC-2**	SWDM 5.4.6.3	$ 67.51	Each			
Crushed surfacing 1 1/4" minus	**ESC-3**	WSDOT 9-03.9(3)	$ 85.45	CY			
Ditching	**ESC-4**		$ 8.08	CY			
Excavation-bulk	**ESC-5**		$ 1.50	CY			
Fence, silt	**ESC-6**	SWDM 5.4.3.1	$ 1.38	LF			
Fence, Temporary (NGPE)	**ESC-7**		$ 1.38	LF			
Hydroseeding	**ESC-8**	SWDM 5.4.2.4	$ 0.59	SY			
Jute Mesh	**ESC-9**	SWDM 5.4.2.2	$ 1.45	SY			
Mulch, by hand, straw, 3" deep	**ESC-10**	SWDM 5.4.2.1	$ 2.01	SY			
Mulch, by machine, straw, 2" deep	**ESC-11**	SWDM 5.4.2.1	$ 0.53	SY			
Piping, temporary, CPP, 6"	**ESC-12**		$ 10.70	LF			
Piping, temporary, CPP, 8"	**ESC-13**		$ 16.10	LF			
Piping, temporary, CPP, 12"	**ESC-14**		$ 20.70	LF			
Plastic covering, 6mm thick, sandbagged	**ESC-15**	SWDM 5.4.2.3	$ 2.30	SY			
Rip Rap, machine placed; slopes	**ESC-16**	WSDOT 9-13.1(2)	$ 39.08	CY			
Rock Construction Entrance, 50'x15'x1'	**ESC-17**	SWDM 5.4.4.1	$ 1,464.34	Each			
Rock Construction Entrance, 100'x15'x1'	**ESC-18**	SWDM 5.4.4.1	$ 2,928.68	Each			
Sediment pond riser assembly	**ESC-19**	SWDM 5.4.5.2	$ 1,949.38	Each			
Sediment trap, 5' high berm	**ESC-20**	SWDM 5.4.5.1	$ 17.91	LF			
Sed. trap, 5' high, riprapped spillway berm section	**ESC-21**	SWDM 5.4.5.1	$ 68.54	LF			
Seeding, by hand	**ESC-22**	SWDM 5.4.2.4	$ 0.51	SY			
Sodding, 1" deep, level ground	**ESC-23**	SWDM 5.4.2.5	$ 6.03	SY			
Sodding, 1" deep, sloped ground	**ESC-24**	SWDM 5.4.2.5	$ 7.45	SY			
TESC Supervisor	**ESC-25**		$ 74.75	HR			
Water truck, dust control	**ESC-26**	SWDM 5.4.7	$ 97.75	HR			
WRITE-IN-ITEMS ** (see page 9)**							
				Each			

DRAFT

ESC SUBTOTAL:	$ -
30% CONTINGENCY & MOBILIZATION:	$ -
ESC TOTAL:	$ -
COLUMN:	**A**

Unit prices updated: 02/12/02
Version: 04/22/02

Check out the DDES Web site at www.metrokc.gov/ddes

Report Date: 5/26/2005

Site Improvement Bond Quantity Worksheet

				Existing Right-of-Way		Future Public Road Improvements & Drainage Facilities		Private Improvements		Quantity Completed (Bond Reduction)*	
		Unit Price	Unit	Quant.	Cost	Quant.	Cost	Quant.	Cost	Quant. Complete	Cost
GENERAL ITEMS	**No.**										
Backfill & Compaction- embankment	GI - 1	$ 5.62	CY								
Backfill & Compaction- trench	GI - 2	$ 8.53	CY								
Clear/Remove Brush, by hand	GI - 3	$ 0.36	SY								
Clearing/Grubbing/Tree Removal	GI - 4	$ 8,876.16	Acre								
Excavation - bulk	GI - 5	$ 1.50	CY								
Excavation - Trench	GI - 6	$ 4.06	CY								
Fencing, cedar, 6' high	GI - 7	$ 18.55	LF								
Fencing, chain link, vinyl coated, 6' high	GI - 8	$ 13.44	LF								
Fencing, chain link, gate, vinyl coated, 20	GI - 9	$ 1,271.81	Each								
Fencing, split rail, 3' high	GI - 10	$ 12.12	LF								
Fill & compact - common barrow	GI - 11	$ 22.57	CY								
Fill & compact - gravel base	GI - 12	$ 25.48	CY								
Fill & compact - screened topsoil	GI - 13	$ 37.85	CY								
Gabion, 12" deep, stone filled mesh	GI - 14	$ 54.31	SY								
Gabion, 18" deep, stone filled mesh	GI - 15	$ 74.85	SY								
Gabion, 36" deep, stone filled mesh	GI - 16	$ 132.48	SY								
Grading, fine, by hand	GI - 17	$ 2.02	SY								
Grading, fine, with grader	GI - 18	$ 0.95	SY								
Monuments, 3' long	GI - 19	$ 135.13	Each								
Sensitive Areas Sign	GI - 20	$ 2.88	Each								
Sodding, 1" deep, sloped ground	GI - 21	$ 7.46	SY								
Surveying, line & grade	GI - 22	$ 788.26	Day								
Surveying, lot location/lines	GI - 23	$ 1,556.64	Acre								
Traffic control crew (2 flaggers)	GI - 24	$ 85.18	HR								
Trail, 4" chipped wood	GI - 25	$ 7.59	SY								
Trail, 4" crushed cinder	GI - 26	$ 8.33	SY								
Trail, 4" top course	GI - 27	$ 8.19	SY								
Wall, retaining, concrete	GI - 28	$ 44.16	SF								
Wall, rockery	GI - 29	$ 9.49	SF								

DRAFT

SUBTOTAL _____ _____ _____ _____

*KCC 27A authorizes only one bond reduction.

Check out the DDES Web site at www.metrokc.gov/ddes

Unit prices updated: 02/12/02
Version: 4/22/02
Report Date: 5/26/2005

Site Improvement Bond Quantity Worksheet

				Existing Right-of-way		Future Public Road Improvements & Drainage Facilities		Private Improvements		Bond Reduction*	
		Unit Price	Unit	Quant.	Cost	Quant.	Cost	Quant.	Cost	Quant. Complete	Cost
ROAD IMPROVEMENT	**No.**										
AC Grinding, 4' wide machine < 1000sy	RI - 1	$ 23.00	SY								
AC Grinding, 4' wide machine 1000-2000	RI - 2	$ 5.75	SY								
AC Grinding, 4' wide machine > 2000sy	RI - 3	$ 1.38	SY								
AC Removal/Disposal/Repair	RI - 4	$ 41.14	SY								
Barricade, type I	RI - 5	$ 30.03	LF								
Barricade, type III (Permanent)	RI - 6	$ 45.05	LF								
Curb & Gutter, rolled	RI - 7	$ 13.27	LF								
Curb & Gutter, vertical	RI - 8	$ 9.69	LF								
Curb and Gutter, demolition and disposal	RI - 9	$ 13.58	LF								
Curb, extruded asphalt	RI - 10	$ 2.44	LF								
Curb, extruded concrete	RI - 11	$ 2.56	LF								
Sawcut, asphalt, 3" depth	RI - 12	$ 1.85	LF								
Sawcut, concrete, per 1" depth	RI - 13	$ 1.69	LF								
Sealant, asphalt	RI - 14	$ 0.99	LF								
Shoulder, AC, (see AC road unit price)	RI - 15	$ -	SY								
Shoulder, gravel, 4" thick	RI - 16	$ 7.53	SY								
Sidewalk, 4" thick	RI - 17	$ 30.52	SY								
Sidewalk, 4" thick, demolition and disposa	RI - 18	$ 27.73	SY								
Sidewalk, 5" thick	RI - 19	$ 34.94	SY								
Sidewalk, 5" thick, demolition and disposa	RI - 20	$ 34.65	SY								
Sign, handicap	RI - 21	$ 85.28	Each								
Striping, per stall	RI - 22	$ 5.82	Each								
Striping, thermoplastic, (for crosswalk)	RI - 23	$ 2.38	SF								
Striping, 4" reflectorized line	RI - 24	$ 0.25	LF								

DRAFT

SUBTOTAL _____ _____ _____ _____

*KCC 27A authorizes only one bond reduction.

Check out the DDES Web site at www.metrokc.gov/ddes

Unit prices updated: 02/12/02
Version: 4/22/02
Report Date: 5/26/2005

Site Improvement Bond Quantity Worksheet

				Existing Right-of-way		Future Public Road Improvements & Drainage Facilities		Private Improvements		Bond Reduction*	
		Unit Price	Unit	Quant.	Cost	Quant.	Cost	Quant.	Cost	Quant. Complete	Cost
ROAD SURFACING (4" Rock = 2.5 base & 1.5" top course) For '93 KCRS (6.5" Rock= 5" base & 1.5" top course)											
For KCRS '93, (additional 2.5" base) add	RS - 1	$ 3.60	SY								
AC Overlay, 1.5" AC	RS - 2	$ 7.39	SY								
AC Overlay, 2" AC	RS - 3	$ 8.75	SY								
AC Road, 2", 4" rock, First 2500 SY	RS - 4	$ 17.24	SY								
AC Road, 2", 4" rock, Qty. over 2500SY	RS - 5	$ 13.36	SY								
AC Road, 3", 4" rock, First 2500 SY	RS - 6	$ 19.69	SY								
AC Road, 3", 4" rock, Qty. over 2500 SY	RS - 7	$ 15.81	SY								
AC Road, 5", First 2500 SY	RS - 8	$ 14.57	SY								
AC Road, 5", Qty. Over 2500 SY	RS - 9	$ 13.94	SY								
AC Road, 6", First 2500 SY	RS - 10	$ 16.76	SY								
AC Road, 6", Qty. Over 2500 SY	RS - 11	$ 16.12	SY								
Asphalt Treated Base, 4" thick	RS - 12	$ 9.21	SY								
Gravel Road, 4" rock, First 2500 SY	RS - 13	$ 11.41	SY								
Gravel Road, 4" rock, Qty. over 2500 SY	RS - 14	$ 7.53	SY								
PCC Road, 5", no base, over 2500 SY	RS - 15	$ 21.51	SY								
PCC Road, 6", no base, over 2500 SY	RS - 16	$ 21.87	SY								
Thickened Edge	RS - 17	$ 6.89	LF								

SUBTOTAL

DRAFT

*KCC 27A authorizes only one bond reduction.

Site Improvement Bond Quantity Worksheet

				Existing Right-of-way		Future Public Road Improvements & Drainage Facilities		Private Improvements		Bond Reduction*	
		Unit Price	Unit	Quant.	Cost	Quant.	Cost	Quant.	Cost	Quant. Complete	Cost
DRAINAGE (CPP = Corrugated Plastic Pipe, N12 or Equivalent)											
For Culvert prices, Average of 4' cover was assumed. Assume perforated PVC is same price as solid pipe.											
Access Road, R/D	D - 1	$ 16.74	SY								
Bollards - fixed	D - 2	$ 240.74	Each								
Bollards - removable	D - 3	$ 452.34	Each								
* (CBs include frame and lid)											
CB Type I	D - 4	$ 1,257.64	Each								
CB Type IL	D - 5	$ 1,433.59	Each								
CB Type II, 48" diameter	D - 6	$ 2,033.57	Each								
for additional depth over 4'	D - 7	$ 436.52	FT								
CB Type II, 54" diameter	D - 8	$ 2,192.54	Each								
for additional depth over 4'	D - 9	$ 486.53	FT								
CB Type II, 60" diameter	D - 10	$ 2,351.52	Each								
for additional depth over 4'	D - 11	$ 536.54	FT								
CB Type II, 72" diameter	D - 12	$ 3,212.64	Each								
for additional depth over 4'	D - 13	$ 692.21	FT								
Through-curb Inlet Framework (Add)	D - 14	$ 366.09	Each								
Cleanout, PVC, 4"	D - 15	$ 130.55	Each								
Cleanout, PVC, 6"	D - 16	$ 174.90	Each								
Cleanout, PVC, 8"	D - 17	$ 224.19	Each								
Culvert, PVC, 4"	D - 18	$ 8.64	LF								
Culvert, PVC, 6"	D - 19	$ 12.60	LF								
Culvert, PVC, 8"	D - 20	$ 13.33	LF								
Culvert, PVC, 12"	D - 21	$ 21.77	LF								
Culvert, CMP, 8"	D - 22	$ 17.25	LF								
Culvert, CMP, 12"	D - 23	$ 26.45	LF								
Culvert, CMP, 15"	D - 24	$ 32.73	LF								
Culvert, CMP, 18"	D - 25	$ 37.74	LF								
Culvert, CMP, 24"	D - 26	$ 53.33	LF								
Culvert, CMP, 30"	D - 27	$ 71.45	LF								
Culvert, CMP, 36"	D - 28	$ 112.11	LF								
Culvert, CMP, 48"	D - 29	$ 140.83	LF								
Culvert, CMP, 60"	D - 30	$ 235.45	LF								
Culvert, CMP, 72"	D - 31	$ 302.58	LF								

DRAFT

SUBTOTAL _____ _____ _____ _____

*KCC 27A authorizes only one bond reduction.

Check out the DDES Web site at www.metrokc.gov/ddes

Unit prices updated: 02/12/02
Version: 4/22/02
Report Date: 5/26/2005

Site Improvement Bond Quantity Worksheet

DRAINAGE CONTINUED				Existing Right-of-way		Future Public Road Improvements & Drainage Facilities		Private Improvements		Bond Reduction*	
	No.	Unit Price	Unit	Quant.	Cost	Quant.	Cost	Quant.	Cost	Quant. Complete	Cost
Culvert, Concrete, 8"	D - 32	$ 21.02	LF								
Culvert, Concrete, 12"	D - 33	$ 30.05	LF								
Culvert, Concrete, 15"	D - 34	$ 37.34	LF								
Culvert, Concrete, 18"	D - 35	$ 44.51	LF								
Culvert, Concrete, 24"	D - 36	$ 61.07	LF								
Culvert, Concrete, 30"	D - 37	$ 104.18	LF								
Culvert, Concrete, 36"	D - 38	$ 137.63	LF								
Culvert, Concrete, 42"	D - 39	$ 158.42	LF								
Culvert, Concrete, 48"	D - 40	$ 175.94	LF								
Culvert, CPP, 6"	D - 41	$ 10.70	LF								
Culvert, CPP, 8"	D - 42	$ 16.10	LF								
Culvert, CPP, 12"	D - 43	$ 20.70	LF								
Culvert, CPP, 15"	D - 44	$ 23.00	LF								
Culvert, CPP, 18"	D - 45	$ 27.60	LF								
Culvert, CPP, 24"	D - 46	$ 36.80	LF								
Culvert, CPP, 30"	D - 47	$ 48.30	LF								
Culvert, CPP, 36"	D - 48	$ 55.20	LF								
Ditching	D - 49	$ 8.08	CY								
Flow Dispersal Trench (1,436 base+)	D - 50	$ 25.99	LF								
French Drain (3' depth)	D - 51	$ 22.60	LF								
Geotextile, laid in trench, polypropylene	D - 52	$ 2.40	SY								
Infiltration pond testing	D - 53	$ 74.75	HR								
Mid-tank Access Riser, 48" dia, 6' deep	D - 54	$ 1,605.40	Each								
Pond Overflow Spillway	D - 55	$ 14.01	SY								
Restrictor/Oil Separator, 12"	D - 56	$ 1,045.19	Each								
Restrictor/Oil Separator, 15"	D - 57	$ 1,095.56	Each								
Restrictor/Oil Separator, 18"	D - 58	$ 1,146.16	Each								
Riprap, placed	D - 59	$ 39.08	CY								
Tank End Reducer (36" diameter)	D - 60	$ 1,000.50	Each								
Trash Rack, 12"	D - 61	$ 211.97	Each								
Trash Rack, 15"	D - 62	$ 237.27	Each								
Trash Rack, 18"	D - 63	$ 268.89	Each								
Trash Rack, 21"	D - 64	$ 306.84	Each								

DRAFT

SUBTOTAL _____ _____ _____ _____

*KCC 27A authorizes only one bond reduction.

Check out the DDES Web site at www.metrokc.gov/ddes

Unit prices updated: 02/12/02
Version: 4/22/02
Report Date: 5/26/2005

Site Improvement Bond Quantity Worksheet

				Existing Right-of-way		Future Public Road Improvements & Drainage Facilities		Private Improvements		Bond Reduction*	
		Unit Price	Unit	Quant.	Price	Quant.	Cost	Quant.	Cost	Quant. Complete	Cost
PARKING LOT SURFACING											
	No.										
2" AC, 2" top course rock & 4" borrow	PL - 1	$ 15.84	SY								
2" AC, 1.5" top course & 2.5" base cour	PL - 2	$ 17.24	SY								
4" select borrow	PL - 3	$ 4.55	SY								
1.5" top course rock & 2.5" base course	PL - 4	$ 11.41	SY								
WRITE-IN-ITEMS											
(Such as detention/water quality vaults.)	No.										
	WI - 1		Each								
	WI - 2		SY								
	WI - 3		CY								
	WI - 4		LF								
	WI - 5		FT								
	WI - 6										
	WI - 7										
	WI - 8										
	WI - 9										
	WI - 10										

DRAFT

SUBTOTAL				
SUBTOTAL (SUM ALL PAGES):				
30% CONTINGENCY & MOBILIZATION:				
GRANDTOTAL:				
COLUMN:	**B**	**C**	**D**	**E**

*KCC 27A authorizes only one bond reduction.

Site Improvement Bond Quantity Worksheet

Original bond computations prepared by:

Name: _____ **Date:** _____

PE Registration Number: _____ **Tel. #:** _____

Firm Name: _____

Address: _____ **Project No:** _____

ROAD IMPROVEMENTS & DRAINAGE FACILITIES FINANCIAL GUARANTEE REQUIREMENTS

		PERFORMANCE BOND* AMOUNT	BOND* AMOUNT REQUIRED AT RECORDING OR TEMPORARY OCCUPANCY ***	PUBLIC ROAD & DRAINAGE MAINTENANCE/DEFECT BOND*
Stabilization/Erosion Sediment Control (ESC)	(A)	$ -		
Existing Right-of-Way Improvements	(B)	$ -		
Future Public Road Improvements & Drainage Facilities	(C)	$ -		
Private Improvements	(D)	$ -		
Calculated Quantity Completed			(E) $ -	
Total Right-of Way and/or Site Restoration Bond*/** (First $7,500 of bond* shall be cash.)	(A+B)	$ -		
Performance Bond* Amount (A+B+C+D) = TOTAL	(T)	$ - Minimum bond* amount is $1000.	T x 0.30 $ - OR	
Reduced Performance Bond* Total ***			(T-E) $ - Use larger of Tx30% or (T-E)	
Maintenance/Defect Bond* Total				(B+C) x 0.25 = $ -

DRAFT

NAME OF PERSON PREPARING BOND* REDUCTION: _____ Date: _____

*** NOTE:** The word "bond" as used in this document means any financial guarantee acceptable to King County.

**** NOTE:** KCC 27A authorizes right of way and site restoration bonds to be combined when both are required. The restoration requirement shall include the total cost for all TESC as a minimum, not a maximum. In addition, corrective work, both on- and off-site needs to be included. Quantities shall reflect worse case scenarios not just minimum requirements. For example, if a salmonid stream may be damaged, some estimated costs for restoration needs to be reflected in this amount. The 30% contingency and mobilization costs are computed in this quantity.

***** NOTE:** Per KCC 27A, total bond amounts remaining after reduction shall not be less than 30% of the original amount (T) or as revised by major design changes.
SURETY BOND RIDER NOTE: If a bond rider is used, minimum additional performance bond shall be $ - (C+D)-E

REQUIRED BOND* AMOUNTS ARE SUBJECT TO REVIEW AND MODIFICATION BY DDES

Check out the DDES Web site at www.metrokc.gov/ddes

Unit prices updated: 02/12/02
Version: 4/22/02
Report Date: 5/26/2005

KING COUNTY, WASHINGTON
SURFACE WATER DESIGN MANUAL

REFERENCE 8-I

MAINTENANCE AND DEFECT AGREEMENT

DRAFT

MAINTENANCE AND DEFECT AGREEMENT (Two Years) For public roads and drainage facilities	Applicant's Name and Address
Agreement Number	Project Number and Name
Guarantee Amount	Site Location/Section

This AGREEMENT is made and entered into this _____ day of _____, 19____, between the King County Department of Transportation, Road Services Division, hereinafter called the COUNTY, and the above named APPLICANT, hereinafter called APPLICANT.

Basis for AGREEMENT:

WHEREAS the undersigned APPLICANT has constructed public roads and/or drainage facilities in connection with the above-referenced project; and

WHEREAS the APPLICANT has agreed to secure the successful maintenance and operation of said improvements for the referenced projects pursuant to King County Ordinance 12020 and King County Code Title 14 and 19;

NOW THEREFORE, the APPLICANT hereby agrees and binds itself and it's legal representatives, successors, and assigns as follows:

DRAFT

Terms of the AGREEMENT:

1. The improvements constructed by the APPLICANT or his representative shall successfully operate and shall remain free of defects in design, workmanship, materials, and design for a period of two years from the date of satisfactory completion of the improvements or final plat approval, whichever is later. As used in this AGREEMENT, the term "defects" includes but is not limited to, damage resulting from construction activities and/or use during the two year period.
2. The APPLICANT is responsible for maintenance of the public road and drainage facilities, including the roadway surface for the two year period from the date of satisfactory construction approval or final plat approval, whichever is later.
3. In the event of any failure of the improvements to satisfactorily operate or in the event of a defect in design, workmanship or materials, the APPLICANT shall promptly and adequately repair and/or correct the failure or defect.
4. The COUNTY will perform maintenance inspections during the two year period.
5. During the two year period upon notification by the COUNTY, the APPLICANT shall correct and/or make repairs to the right-of-way improvements within the time period specified by the COUNTY when defects in the design, workmanship, or materials occur.
6. In the event the COUNTY determines that repairs must be performed immediately to prevent risk to person(s) and property, the COUNTY may make necessary repairs and the costs of those repairs shall be paid by the APPLICANT upon demand.
7. The APPLICANT shall pay all required fees in accordance with King County Code.
8. At the end of the two year period, the APPLICANT shall clean the drainage system prior to the COUNTY's final inspection.

Agreement Number	Project Number and Name

9. If, at the conclusion of the two year period, King County, at its sole discretion, determines that the improvements are not adequately maintained, the APPLICANT shall perform prompt maintenance to the COUNTY's satisfaction. In the event this maintenance is not performed within the time period specified by the COUNTY, the COUNTY will invoke the enforcement and Notice and Order processes found in K.C.C. 23.12.
10. Any failure by the APPLICANT to comply with the terms of this AGREEMENT in a timely manner shall constitute default. Any action or inaction by King County following any default in any term or condition of this AGREEMENT shall not be deemed to waive any rights of King County pursuant to this AGREEMENT.
11. The APPLICANT shall indemnify and hold the COUNTY and it's agents, employees and/or officers harmless from and shall process and defend at it's own expense all claims, damages, suits at law or equity, actions, penalties, losses, or costs of whatsoever kind or nature, brought against the COUNTY arising out of, in connection with, or incident to the execution of this AGREEMENT and/or the APPLICANT's performance or failure to perform any aspect of the AGREEMENT. Provided, however, that if such claims are caused by or result from concurrent negligence of the APPLICANT and the COUNTY, it's agents, employees and/or officers, this provision shall be valid and enforceable only to the extent of the negligence of the APPLICANT, and provided further, that nothing herein shall require the APPLICANT to hold harmless or defend the COUNTY from any claim arising from the sole negligence of the COUNTY's agents, employees and/or officers.
12. In the event that any party deems it necessary to institute legal action or proceedings to enforce any right or obligation under this AGREEMENT, the parties hereto agree that any such action or proceeding shall be brought in a court of competent jurisdiction situated in King County, Washington.

DRAFT

Release Requirements: This AGREEMENT shall remain in full force and effect and shall not be released until all terms of this AGREEMENT have been completed to the satisfaction of the King County Road Engineer or his/her designee.

IN WITNESS THEREOF, the parties hereto have executed this AGREEMENT as of the day and year first above written.

APPLICANT

By Title Date

Received for King County By Date

1/1/05

KING COUNTY, WASHINGTON
SURFACE WATER DESIGN MANUAL

REFERENCE 8-J

DECLARATION OF COVENANT

DRAFT

After Recording return to:

_____
_____
_____

DECLARATION OF COVENANT AND GRANT OF EASEMENT

IN CONSIDERATION of the approved King County _____ permit for application No. _____ relating to real property described as follows:_____

_____

_____.

The undersigned as Grantor(s), declares that the above described property is hereby subject to an easement for a system of stormwater facilities and BMPs, and hereby dedicates, covenants and agrees as follows:

1. King County shall have the right to ingress and egress over those portions not contained in Exhibit "A" to access such easement area for inspection of and to reasonably monitor the performance, operational flows, or defects in accordance with and [as presented in King County Code Section 9.04.120].

2. If King County determines that maintenance or repair work is required to be done to the system, the Director of the Water and Land Resources Division of the King County

DRAFT

Department of Natural Resources shall give notice of the specific maintenance and/or repair work required pursuant to K.C.C 9.04.120. The Director shall also set a reasonable time in which such work is to be completed by the Grantor(s), its heirs or assigns. If the above required maintenance or repair is not completed with the time set by the Director, the County may perform the required maintenance or repair. Written notice will be sent to the Grantor(s) stating the County's intention to perform such maintenance. Maintenance work will not commence until at least seven (7) days after such notice is mailed. If, within the sole discretion of the Water and Land Resources Division Director, there exists an imminent or present danger, said seven (7) day notice period will be waived and maintenance and/or repair work will begin immediately.

3. If at any time King County reasonably determines that any existing drainage facility or flow control BMP creates any of the conditions listed in K.C.C. 9.04.130 and herein incorporated by reference, the Water and Land Resources Division Director may take measures specified therein.

4. The Grantor(s) shall assume all responsibility for the cost of any maintenance and for repairs to the system. Such responsibility shall include reimbursement to the County within thirty (30) days of the receipt of the invoice for any such work performed. Overdue payments will require payment of interest at the current legal rate as liquidated damages. If legal action ensues, the prevailing party is entitled to costs or fees

5. The Grantor(s) is (are) hereby required to obtain written approval from the Water and Land Resources Division Director of the King County Department of Natural Resources prior to filling, piping, cutting, or removing vegetation (except in routine landscape maintenance) in open vegetated drainage facilities (such as swales, channels, ditches, ponds, etc.), or performing any alterations or modifications to the drainage facilities contained within said drainage easement. Any notice or consent required to be given or otherwise provided for by the provisions of this

DRAFT

Agreement shall be effective upon personal delivery, or three (3) days after mailing by Certified Mail, return receipt requested.

6. This agreement constitutes the entire agreement between the parties, and supercedes all prior discussions, negotiations, and all agreements whatsoever whether oral or written.

This covenant is intended to protect the value and desirability of the real property described above, and shall insure to the benefit of all the citizens of King County, and shall be binding on all heirs, successors and assigns.

_____
OWNER

_____
OWNER

STATE OF WASHINGTON)
COUNTY OF KING)ss.

On this day personally appeared before me:

_____, to me known to be the individual(s) described in and who executed the within and foregoing instrument and acknowledged that they signed the same as their free and voluntary act and deed, for the uses and purposes therein stated.

Given under my hand and official seal this _____ day of _____, 20__.

_____

_____
Printed name
Notary Public in and for the State of Washington,
residing at _____

My appointment expires _____

DRAFT

KING COUNTY, WASHINGTON
SURFACE WATER DESIGN MANUAL

REFERENCE 8-K

DRAINAGE RELEASE COVENANT

DRAFT

After Recording return to:

_____
_____
_____

DRAINAGE RELEASE COVENANT

DRAFT

This agreement made this _____ day of _____, 20_____, _____, hereinafter called the GRANTOR(s), and KING COUNTY, a political subdivision of the State Of Washington, hereinafter called the GRANTEE, and whereas the GRANTOR represents and warrants that it is the owner in fee of that certain parcel of land, described as follows:

_____

_____

_____

_____,

and whereas the GRANTEE is implementing an approved drainage plan for the project known as _____, permit no. _____, on lands located at the above description, which said plan shall divert surface and storm waters from their natural

course and cause them to flow (onto)/(away from) the lands of GRANTOR; NOW THEREFORE in consideration of either GRANTEE approval of diversion of said plan and/or other valuable consideration, receipt of which is hereby acknowledged, the GRANTOR hereby willfully acknowledges, agrees and consents to the diversion of surface and storm waters (onto)/(away from) its lands and to hold and release GRANTEE harmless for any damage that may be caused by such diversion of flow. This release shall be a covenant running with the land and shall be binding upon the GRANTOR, its heirs, successors and assigns forever.

IN WITNESS THEREOF, the parties hereto have hereunto set their hands:

_____
GRANTOR

_____
GRANTOR

DRAFT

STATE OF WASHINGTON)
COUNTY OF KING)ss.

On this day personally appeared before me:

_____, to me known to be the individual(s) described in and who executed the within and foregoing instrument and acknowledged that they signed the same as their free and voluntary act and deed, for the uses and purposes therein stated.

Given under my hand and official seal this ____ day of _____, 20___.

_____

_____
Printed name
Notary Public in and for the State of Washington,
residing at _____

My appointment expires _____

KING COUNTY, WASHINGTON
SURFACE WATER DESIGN MANUAL

REFERENCE 8-L

DRAINAGE EASEMENT

DRAFT

After Recording return to:

_____
_____
_____

DRAINAGE EASEMENT

DRAFT

For a valuable consideration, receipt of which is hereby acknowledged, the GRANTOR(s),_____, the owner(s) in fee of that certain parcel of land, described as follows:

_____

_____

_____,

hereby grant and convey a(an) [exclusive/non-exclusive] easement (attached and incorporated as Exhibit "A") to King County, a political subdivision of the State of Washington, (GRANTEE) for the purpose of conveying, storing, managing and facilitating surface and storm water per an engineering plan approved by King County for the project known as:

_____

_____,

together with the right for King County to enter said drainage easement at reasonable times for the purpose of inspecting, operating, maintaining, repairing and improving the drainage facilities contained herein. Note that except for facilities which have been formally accepted for

maintenance by King County, maintenance and repair of drainage facilities on private property is the responsibility of the property owner.

The GRANTOR(s) of said parcel is (are) required to obtain prior written approval from the Water and Land Resources Division of the King County Department of Natural Resources prior to filling, piping, cutting or removing vegetation (except for routine landscape maintenance such as lawn mowing) in open vegetated drainage facilities (such as swales, channels, ditches, ponds, etc.), or performing any alterations or modifications to the drainage facilities, contained within said drainage easement.

This easement is intended to facilitate reasonable access to the drainage facilities. It is binding upon the GRANTOR(s), its heirs, successors and assigns.

_____
GRANTOR

_____
GRANTOR

DRAFT

STATE OF WASHINGTON)
COUNTY OF KING)ss.

On this day personally appeared before me:

_____, to me known to be the individual(s) described in and who executed the within and foregoing instrument and acknowledged that they signed the same as their free and voluntary act and deed, for the uses and purposes therein stated.

Given under my hand and official seal this _____day of _____, 20___.

_____

_____
Printed name
Notary Public in and for the State of Washington,
residing at _____

My appointment expires _____

KING COUNTY, WASHINGTON
SURFACE WATER DESIGN MANUAL

REFERENCE 8-M

SMALL PROJECT FLOW CONTROL BMP DECLARATION OF COVENANT AND GRANT OF EASEMENT

DRAFT

RECORDING REQUESTED BY AND
WHEN RECORDED MAIL TO:

_____

_____

_____

_____

RECORDING COVER SHEET

DECLARATION OF COVENANT AND GRANT OF EASEMENT

Grantor: _____

Grantee: _____

Legal Description: _____

_____

_____

Additional Legal(s) on: _____

Assessor's Tax Parcel ID#: _____

_____

_____

DRAFT

DECLARATION OF COVENANT AND GRANT OF EASEMENT
For Stormwater Flow Control Best Management Practices

IN CONSIDERATION of the following approved King County (check one of the following) ❑ residential building permit, ❑ commercial building permit, ❑ clearing and grading permit, ❑ subdivision permit, or ❑ short subdivision permit for Application No. _____ relating to real property ("Property") legally described as follows:

_____

_____

_____

_____

The Grantor(s), the owner(s) in fee of the above described parcel of land, hereby covenants with King County, a political subdivision of the state of Washington its successors in interest and assigns ("King County"), that it will observe, consent to, and abide by the conditions and obligations set forth and described in Paragraphs 1 and 2 and 4 through 7 below with regard to the Property, and hereby grants an access easement on and to the Property to King County, for the purposes described in Paragraph 3 below. Grantor(s) hereby grants, covenants, and agrees as follows:

DRAFT

1. Owner(s) of the Property shall retain, uphold, and protect the stormwater management devices, features, pathways, limits, and restrictions, known as flow control best management practices ("Flow Control BMPs"), shown on the approved Flow Control BMP Site Plan for the Property attached hereto and incorporated herein as Exhibit A.

2. Owner(s) of the Property shall at their own cost, operate, maintain, and keep in good repair, the Property's Flow Control BMPs as described in the approved Design and Maintenance Details for each BMP attached hereto and incorporated herein as Exhibit B.

3. King County shall have a nonexclusive perpetual access easement on the Property in order to ingress and egress over the Property for the sole purposes of inspecting and monitoring the

Property's Flow Control BMPs, and if applicable in accordance with the terms of Paragraph 4 below, performing any corrective work required to bring the Property's Flow Control BMPs into compliance with Title 9 of the King County Code.

4. If King County determines that maintenance, repair, restoration, and/or mitigation work is required to be done to the Flow Control BMPs and has not been performed by the Property owner(s), the Director of the Water and Land Resources Division of the King County Department of Natural Resources and Parks shall give notice to the Property owner (s) of the specific maintenance, repair, restoration, and/or mitigation work (Work) required pursuant to Title 9 of the King County Code. The Manager shall also set a reasonable time in which the Work is to be completed by the Property owner(s). If the Work is not completed within the time set by the Division Director, King County may perform the required Work. Written notice will be sent to the Property owner(s) stating King County's intention to perform the Work. Performance of the Work by King County will not commence until at least seven (7) days after such notice is mailed. If, within the sole discretion of the Water and Land Resources Division Director, there exists an imminent or present danger, the owner hereby waives the seven (7) day notice period and the Work will begin immediately.

DRAFT

5. The owner(s) of the Property shall assume all responsibility for the cost of any Work required to be done to the Flow Control BMPs. Such responsibility shall include reimbursement to King County within thirty (30) days of the receipt of the invoice for any such Work performed by King County in accordance with the terms of Paragraph 3 above. Overdue payments will require payment of interest at the current legal rate as liquidated damages. In the event that King County does not receive reimbursement within the required time frame, it may elect to place a lien on the Property and act upon the lien in accordance with the terms and procedures specified in Chapter 23.40 of the King County Code, as amended from time to time. If legal action is taken to enforce the provisions of this Paragraph, the prevailing party is entitled to costs and attorney's fees.

6. Apart from performing routine landscape maintenance, the Property owner(s) is (are) hereby required to obtain written approval from the Water and Land Resources Division Manager of the King County Department of Natural Resources and Parks prior to performing any alterations or modifications to the Flow Control BMPs. Any notice or consent required to be given or otherwise provided for by the provisions of this Declaration of Covenant and Grant of Easement shall be effective upon personal delivery, or three (3) days after mailing by Certified Mail, return receipt requested, whichever occurs sooner.

7. This Declaration of Covenant and Grant of Easement is intended to promote the efficient and effective management of surface water drainage on the Property, and it shall inure to the benefit of all the citizens of King County, its successors and assigns. This Declaration of Covenant and Grant of Easement shall run with the land and be binding upon Grantor(s), and Grantor's (s') successors in interest and assigns.

8. This Declaration of Covenant and Grant of Easement may be terminated by execution of a written agreement by Grantor(s) and King County expressing their mutual agreement to terminate this Declaration of Covenant and Grant of Easement.

DRAFT

IN WITNESS WHEREOF, this Declaration of Covenant and Grant of Easement is executed

this _____day of _____, 20___.

By _____

Its _____

By _____

Its _____

STATE OF WASHINGTON)
)SS
COUNTY OF KING)

On this _____ day of _____, 20___, before me, the undersigned, a Notary Public in and for the State of _____, duly commissioned and sworn personally appeared , to me known to be the individual described in and who executed the foregoing instrument, and acknowledged to me that he signed and sealed the said instrument as h free and voluntary act and deed for the uses and purposes therein mentioned.

WITNESS my hand and official seal hereto affixed the day and year in this certificate above written.

_____

_____
Printed name
Notary Public in and for the State of Washington,
residing at _____

My appointment expires _____

DRAFT

KING COUNTY, WASHINGTON
SURFACE WATER DESIGN MANUAL

REFERENCE 8-N

IMPERVIOUS SURFACE LIMIT COVENANT

DRAFT

After Recording return to:

_____
_____
_____

IMPERVIOUS SURFACE LIMIT COVENANT

DRAFT

IN CONSIDERATION OF the approved King County _____ permit for application No. _____ relating to real property legally described as follows:

_____
_____
_____
_____

The undersigned as Grantor(s), declares that the above described property is hereby established as having a limit to the amount of impervious surface allowed on the property for the purpose of limiting stormwater flows and is subject to the following restrictions.

The Grantor hereby covenants and agrees as follows: no more than _____ square feet of impervious surface coverage is allowed on the property. Impervious surface means a hard surface area that either prevents or retards the entry of water into the soil mantle as under natural conditions before development; or that causes water to run off the surface in greater quantities or at an increased rate of flow from the flow present under natural conditions prior to development. Common impervious surfaces include, but are not limited to, roof, walkways, patios, driveways, parking lots, or storage areas, areas that are paved, graveled or made of packed or oiled earthen materials or other surfaces that similarly impede the natural infiltration of surface and storm

water. King County shall have a nonexclusive perpetual access easement on the Property in order to ingress and egress over the Property for the sole purposes of inspecting and monitoring the Property's impervious surface coverage.

This easement/restriction is binding upon the GRANTOR(s), its heirs, successors and assigns unless or until a new drainage or site plan is reviewed and approved by the Department of Development and Environmental Services or its successor.

_____

GRANTOR

_____

GRANTOR

STATE OF WASHINGTON)
COUNTY OF KING) ss.

On this date, personally appeared before me:

_____ , to me known to be the individual(s) described in and who executed the within and foregoing instrument and acknowledged that they signed the same as their free and voluntary act and deed, for the uses and purposes therein stated.

Given under my hand and official seal this_____ day of _____, 20___.

_____
Printed Name
NOTARY PUBLIC in and for the State of
Washington, residing at _____
My Commission Expires: _____

DRAFT

KING COUNTY, WASHINGTON
SURFACE WATER DESIGN MANUAL

REFERENCE 8-O

CLEARING LIMIT COVENANT

DRAFT

After Recording return to:

_____
_____
_____

CLEARING LIMIT COVENANT

DRAFT

IN CONSIDERATION OF the approved King County _____ permit for application No. _____ relating to real property legally described as follows:

_____
_____
_____
_____

The undersigned as Grantor(s), declares that the above described property is hereby established as having a native growth retention area for the purpose of dispersing and treating stormwater flows and is subject to restrictions applying to vegetation removal in all designated areas shown in Attachment A, and hereby covenants and agrees as follows:

1) Any alterations to sensitive areas, their buffers and native growth retention areas shall be pursuant to applicable King County Code.
2) The property within the native growth protection area (shown in Attachment A) shall be maintained in a forested condition, with the exception of open water and existing non-forested native wetland plant communities. The following activities are allowed:

a) Removal of noxious weeds and non-native vegetation using hand equipment provided that those areas are replanted with appropriate native vegetation.
b) Removal of dangerous and diseased trees.
c) Passive recreation and related activities including trails, nature viewing, fishing, camping areas, and other similar activities that do not require permanent structures, provided that cleared areas and areas of compacted soil associated with these areas and facilities do not exceed eight percent of the native growth retention area.
d) The native growth retention area may contain utilities and utility easements including flow control BMPs, but not including septic systems.
e) Limited trimming and pruning of vegetation for the creation and maintenance of views per applicable King County Code.
f) Timber harvest in accordance with a King County-approved forest management plan and appropriate permits.

Note that for all the above activities forested hydrologic conditions and soil stability shall be maintained. King County shall have a nonexclusive perpetual access easement on the Property in order to ingress and egress over the Property for the sole purposes of inspecting and monitoring the Property's native growth retention area.

DRAFT

This easement/restriction is binding upon the GRANTOR(s), its heirs, successors and assigns unless or until a new drainage or site plan is reviewed and approved by the Department of Development and Environmental Services or its successor.

_____

GRANTOR

_____

GRANTOR

STATE OF WASHINGTON)
COUNTY OF KING) ss.

On this date, personally appeared before me:

_____ , to me known to be the individual(s) described in and who executed the within and foregoing instrument and acknowledged that they signed the same as their free and voluntary act and deed, for the uses and purposes therein stated.

Given under my hand and official seal this_____ day of_____, 20___.

_____
Printed Name
NOTARY PUBLIC in and for the State of
Washington, residing at _____
My Commission Expires: _____

DRAFT

KING COUNTY, WASHINGTON
SURFACE WATER DESIGN MANUAL

REFERENCE 8-P

RIVER PROTECTION EASEMENT

DRAFT

AFTER RECORDING RETURN TO:

King County Property Services Division
500A King County Administration Building
500 Fourth Avenue
Seattle, WA 98104

DRAFT

Document Title: River Protection Easement
Reference Number of Related Document:
Grantor(s):
Grantee(s): King County
Legal Description:
Assessor's Tax Parcel Number:

RIVER PROTECTION EASEMENT

For valuable consideration, receipt of which is hereby acknowledged, the GRANTOR(S),

_____
owner(s) in fee of that certain parcel of land (the "Property"), legally described as follows:
_____
_____
_____
_____

hereby grant(s) to KING COUNTY, a political subdivision of the State of Washington , its successors and assigns, agents and licensees (GRANTEE), a perpetual easement for the purposes of accessing and constructing, inspecting, monitoring, reconstructing, maintaining, repairing, modifying, and removing river bank protection and/or other flood related works, including

installing, inspecting, maintaining and removing all vegetation and any other appurtenances thereto across, in, under, on, over and upon the following portions of the above described Property:

> All portions of the above described parcel that are riverward of a line that is parallel to and thirty (30) feet landward of the stable top of the river bank on the _____ River ("Easement Area"), as constructed or reconstructed, together with reasonable ingress and egress upon the Property to access the Easement Area.

Grantee shall have the right at such time as may be necessary and at the Grantee's sole discretion, to enter upon the Property and to have unimpeded access to, in and through the Easement Area for the purposes of exercising the Grantee's rights as described herein.

Grantor agrees not to plant non-native vegetation within the Easement Area and not to remove or otherwise alter any improvements installed by Grantee, including any native vegetation that may be planted and any flood protection works that may be constructed, within the Easement Area, without the prior approval of Grantee. Grantor further agrees not to use herbicides within the Easement Area without the prior approval of Grantee. Nothing contained herein shall be construed as granting any license, permit or right, otherwise required by law, to Grantor with respect to the Property and the Easement Area.

For the purposes of this river protection easement, the term "native vegetation" shall mean vegetation comprised of plant species, other than noxious weeds (as identified on the State of Washington noxious weed list found at Washington Administrative Code Chapter 16-750, as amended from time to time), which are indigenous to the coastal region of the Pacific Northwest and which reasonably could have been expected to naturally occur at the site.

Neither Grantor nor Grantee is hereby obligated to future maintenance, repair or other action related to the above-described exercise of easement rights. This river protection easement and/or any flood related works constructed or to be constructed within the Easement Area shall not be construed as granting any rights to any third person or entity, or as a guarantee of any protection from flooding or flood damage, and nothing contained herein shall be construed as waiving any immunity to liability granted to Grantee by any state statute, including Chapter 86.12 of the Revised Code of Washington, or as otherwise granted or provided for by law.

DRAFT

The rights, conditions, and provisions of this easement shall inure to the benefit of and be binding upon the heirs, executors, administrators, and successors in interest and assigns of Grantor and Grantee.

_____	_____
GRANTOR	GRANTOR

STATE OF WASHINGTON)
) ss.
COUNTY OF KING)

On this _____ day of _____, 20___, before me, the undersigned, a Notary Public in and for the State of Washington, duly commissioned and sworn, personally appeared _____, to me known to be the individual described in and who executed the foregoing instrument, and acknowledged to me that he/she signed and sealed the said instrument as _____ free and voluntary act and deed for the uses and purposes therein mentioned.

Given under my hand and official seal the _____ day of _____, 20___.

DRAFT

_____
NOTARY PUBLIC in and for the
State of Washington, residing
at _____
My commission expires _____

J\mi20-easement

KING COUNTY, WASHINGTON
SURFACE WATER DESIGN MANUAL

REFERENCE 9

INTERIM CHANGES TO REQUIREMENTS

9-A Blanket Adjustments

9-B Administrative Changes

DRAFT

KING COUNTY, WASHINGTON
SURFACE WATER DESIGN MANUAL

REFERENCE 9-A

BLANKET ADJUSTMENTS

DRAFT

DRAFT

KING COUNTY, WASHINGTON
SURFACE WATER DESIGN MANUAL

REFERENCE 9-B

ADMINISTRATIVE CHANGES

DRAFT

DRAFT