King County

Department of Permitting
and Environmental Review
35030 SE Douglas St. suite 210
Snoqualmie, WA 98065-9266

www.kingcounty.gov/property/permits.aspx

RESIDENTIAL PRESCRIPTIVE DECK DESIGN AND DETAILS

Deck structural failures result in the largest numbers of injuries and fatalities of all residential building failures. Railings and deck connections to the house are leading areas of failure. This handout suggests some methods to achieve safer deck construction and may asist in the design of specific deck plans. The typical plan and details may also suffice if the construction plans for a simple deck conform to these parameters and are no more than 11 feet 6 inches above grade. Decks less than 30 inches above grade may be exempt from the requirement to obtain a permit, but not from code requirements.

This design assistance sheet is intended to provide some basics of private residential deck construction. Additional information can be found at libraries, home improvement stores, and building departments.

This design may be used if all of the following are true:

- This is a single family residential deck.
- The deck is not higher than 11'-6" above finish grade.
- No window, door, or other openings under the deck are greater than 6 feet wide.
- No heavy concentrated loads will be applied on the deck (such as may be applied by hot tubs, or heavy planters).
- The ground snow load does not exceed 40 pounds per square foot.
- The house side of the deck is supported directly by a wall, and not an overhang or cantilever.

Notes:

1) The 40 psf maximum live load used in this design covers the floor load for ordinary single family residential deck construction and is not sfficient to support significant supplemental loads as may be applied from high snow loads, hot tubs, or other concentrated loads.

2) Stainless steel connections are recommended for use in contact with treated wood, especially ACQ (alcaline copper quaternary). Residential treated wood for new outdoor construction is normally ACQ. Hot dipped galvanized or other corrsion resistant connectors may be acceptable; check manufacturers recommendations.

3) Decking shall be pressure treated, or approved plastic, or decay resistant wood. All structural wood shall be pressure treated Hem-Fir #2 minimum.

4) Joists must be spaced according to span limits of the decking product selected.

5) See Sheets 3 & 4 for stair, handrail & guard details.

King County
Department of Permitting
and Environmental Review
35030 SE Douglas St. suite 210
Snoqualmie, WA 98065-9266

www.kingcounty.gov/property/permits.aspx

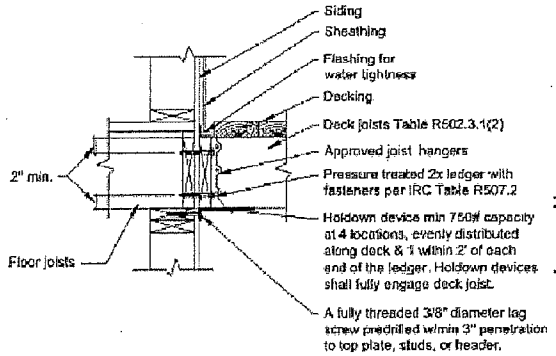

1 **LEDGER @ RIM JOIST**

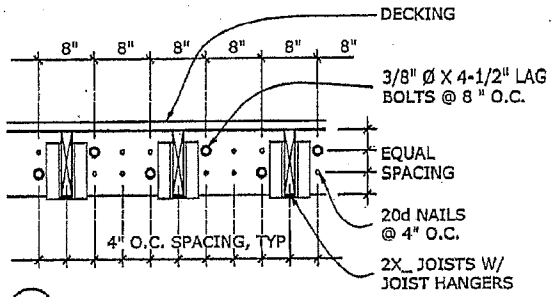

2 **FASTENERS @ LEDGER**

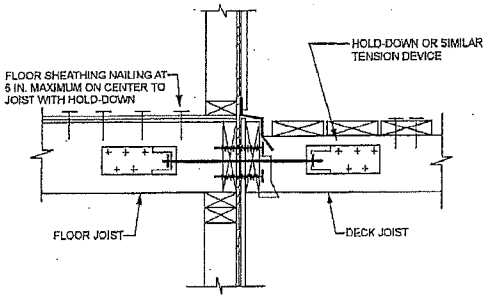

LATERAL LOADS CONNECTION

NOTES:

DESIGN LIVE LOAD = 40 PSF

ALL FRAMING LUMBER, POSTS, & BEAMS, SHALL BE PRESSURE TREATED HEM-FIR #2 OR BETTER.

DECKING SHALL BE PRESSURE TREATED OR APPROVED DECAY RESISTANT WOOD OR PLASTIC.

FASTENERS SHALL BE STAINLESS STEEL OR HOT DIPPED GALVANIZED.

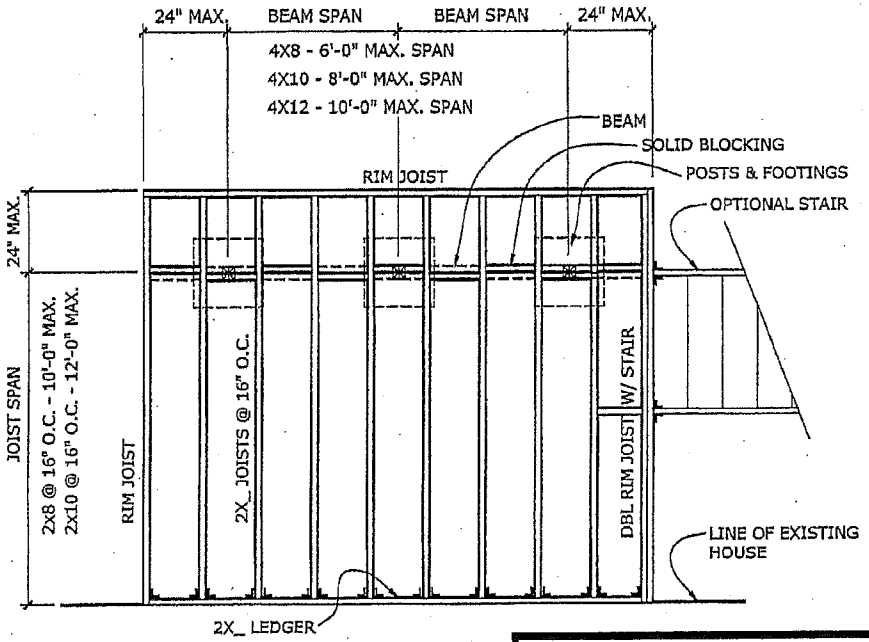

3 **DECK FRAMING PLAN**

Standard Deck Details

Sheet 2 of 4

King County

Department of Permitting
and Environmental Review
35030 SE Douglas St. suite 210
Snoqualmie, WA 98065-9266

www.kingcounty.gov/property/permits.aspx

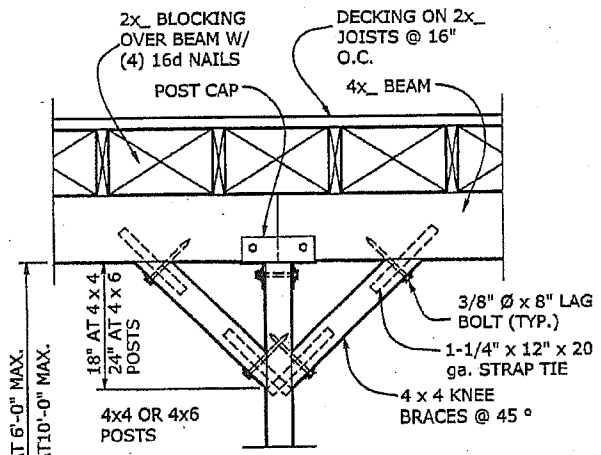

4 TYPICAL KNEE-BRACE
REQ'D @ 4 FT. AND HIGHER DECKS

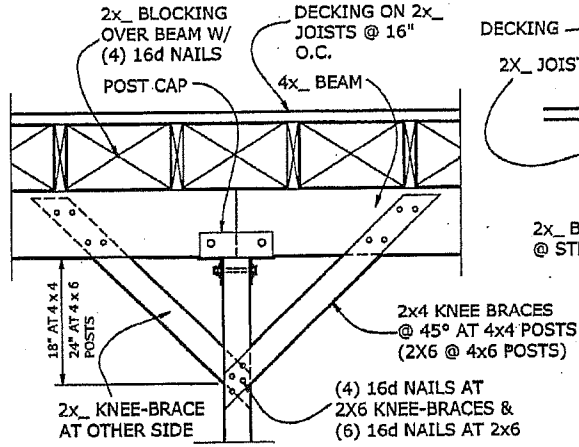

5 ALTERNATE KNEE-BRACE
REQ'D @ 4 FT. AND HIGHER DECKS

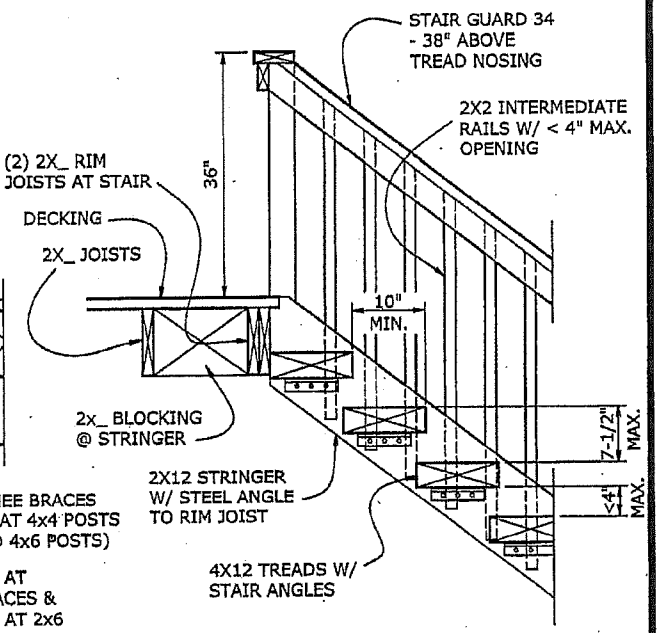

6 DECK STAIR SECTION

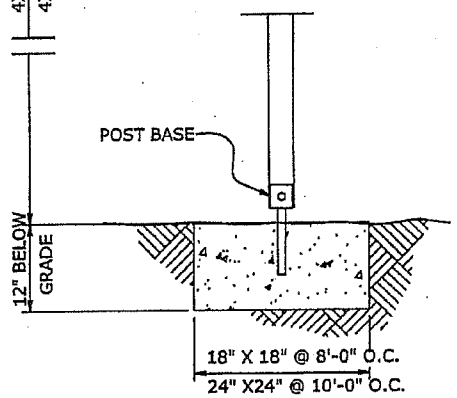

7 TYPICAL POST FOOTING ON UNDISTURBED FIRM SOIL

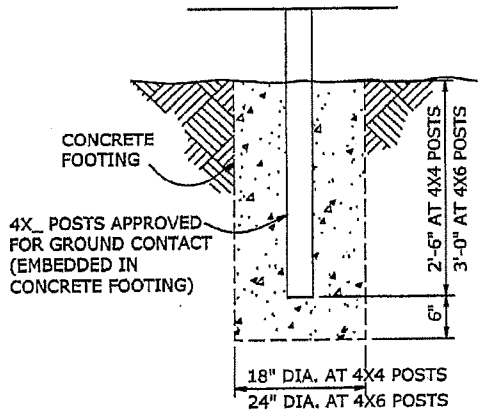

8 ALTERNATE POST FOOTING (ELIMINATES KNEE-BRACE REQUIREMENT)

Standard Deck Details

Sheet 3 of 4

King County

Department of Permitting
and Environmental Review
35030 SE Douglas St. suite 210
Snoqualmie, WA 98065-9266

www.kingcounty.gov/property/permits.aspx

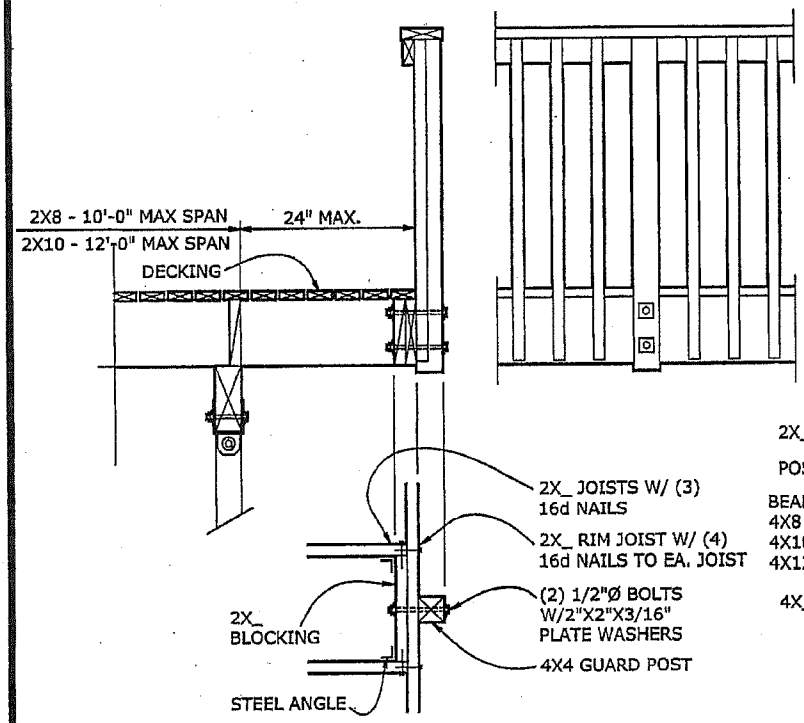

9 **TYPICAL GUARD**

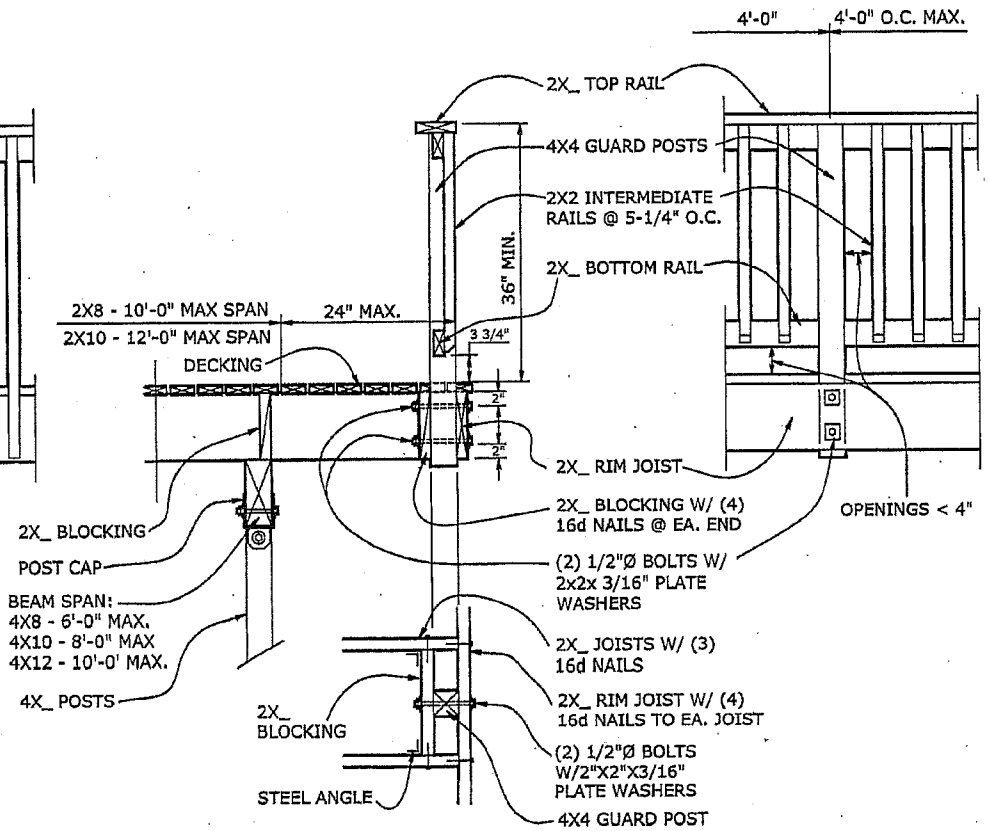

10 **ALTERNATE GUARD W/ TOP & BOTTOM RAILS**

Standard Deck Details

Sheet 4 of 4

Application Number: _____

IRC Deck Conditions

2012 International Residential Code as amended by KCC title 16, 21a and WAC on 7-1-2013

Note: The issuance or granting of a permit shall not be construed to be a permit for, or an approval of, any violation of any of the provisions of this code or of any other ordinances of the jurisdiction. Permits presuming to give authority to violate or cancel the provisions of this code or other ordinances of the jurisdiction shall not be valid. The issuance of a permit based on construction documents and other data shall not prevent the building official from requiring the correction of errors in the construction documents and other data. The building official is also authorized to prevent occupancy or use of a structure where in violation of this code or other ordinances of the jurisdiction. 105.4 IRC/IBC

Note: this correction sheet is part of the approved plans and shall remain attached. The approval of plans and specifications does not permit the violation of any section of the International Residential Code, International Mechanical Code or other County ordinances or state law. The approved plans shall not be changed, modified or altered without authorization from the building official. The approved plans are required to be on the job site. 105.7, 106.3.1, 106.4 IRC/IBC

Revisions or field modifications to issued building permits may require a separate permit with additional review. Permits for revisions require a submittal of revised plans to the DPER Permit Service Center. Review fees and submittal fees will be based on the DPER current fee schedule at the time of permit submittal.

Design and design criteria. Buildings and structures, and all parts thereof, shall be constructed to safely support all loads, including dead loads, live loads, roof loads, flood loads, snow loads, wind loads and seismic loads as prescribed by this code. The construction of buildings and structures shall result in a system that provides a complete load path capable of transferring all loads from their point of origin through the load-resisting elements to the foundation. R301.1

Means of Egress. Stairways, ramps, exterior exit balconies, hallways and doors shall comply with section R311.

1. **Attachment.** Decks and stairs shall be positively anchored to the primary structure to resist both vertical and lateral forces. Such attachment shall not be accomplished by use of toenails or nails subject to withdrawal. The lateral load connection required by R507.1 shall be Hold-down tension devices installed in accordance with Figure R507.2.3 in not less than two locations per deck or Figure R507.2.3(2). Each hold-down device shall have an allowable stress design capacity of not less than 1500 lbs. **R311.5.1, R507.2.3.**
2. **Landing at Exterior Doors:** There shall be a floor or landing on each side of each exterior door, at least the width of the door, and shall be 36 inches minimum measured in the direction of travel. The landing or floor shall not be more than 1.5 inches lower than the top of the threshold. The landing shall be permitted to have a slope not to exceed 0.25 units vertical in 12 units horizontal (2-percent). **R311.3**

   Exceptions:

   1. Where a stairway of two or fewer risers is located on the exterior side of a door, other than the required exit door, a landing is not required for the exterior side of the door provided the door, other than an exterior storm or screen door does not swing over the stairway.
   2. The exterior landing or floor level at an exterior doorway shall not be more than 7¾ inches below the top of the threshold, provided the door, other than an exterior storm or screen door does not swing over the landing.
3. **Stairway design parameters**

   Width. Stairways shall not be less than 36 inches in clear width at all points above the permitted handrail height and below the required headroom height. Handrails shall not project more than 4.5 inches on either side of the stairway and the minimum clear width of the stairway at and below the handrail height, including treads and landings, shall not be less than 31.5 inches where a handrail is installed on one side and 27 where handrails are provided on both sides.

   Exception: The width of spiral stairways shall be in accordance with Section R311.7.10.1. **R311.7.1**

   Headroom. The minimum headroom in all parts of the stairway shall not be less than 6 feet 8 inches measured vertically from the sloped plane adjoining the tread nosing or from the floor surface of the landing or platform. **R311.7.2**

   Riser height. The maximum riser height shall be 7 3/4 inches. The riser shall be measured vertically between leading edges of the adjacent treads. The greatest riser height within any flight of stairs shall not exceed the smallest by more than 3/8 inch. **R311.7.5.1**

   Tread depth. The minimum tread depth shall be 10 inches. The tread depth shall be measured horizontally between the vertical planes of the foremost projection of adjacent treads and at a right angle to the tread's leading edge. The greatest tread depth within any flight of stairs shall not exceed the smallest by more than 3/8

inch. Winder treads shall have a minimum tread depth of 10 inches measured as above at a point 12 inches from the side where the treads are narrower. Winder treads shall have a minimum tread depth of 6 inches at any point. Within any flight of stairs, the greatest winder tread depth at the 12 inch walk line shall not exceed the smallest by more than 3/8 inch. **R311.7.5.2**

Profile. The radius of curvature at the leading edge of the tread shall be no greater than 9/16 inch. A nosing not less than ¾ inch but not more than 1 ¼ inch shall be provided on stairways with solid risers. The greatest nosing projection shall not exceed the smallest nosing projection by more than 3/8 inch between two stories, including the nosing at the level of floors and landings. Beveling of nosing shall not exceed ½ inch. Risers shall be vertical or sloped from the underside of the leading edge of the tread above at an angle not more than 30 degrees from the vertical. Open risers are permitted, provided that the opening between treads does not permit the passage of a 4-inch diameter sphere.

Exceptions:

1. A nosing is not required where the tread depth is a minimum of 11 inches.
2. The opening between adjacent treads is not limited on stairs with a total rise of 30 inches or less. **R311.7.5.1, R311.7.5.3**

4. **Landings for stairways.** There shall be a floor or landing at the top and bottom of each stairway.

Exception: A floor or landing is not required at the top of an interior flight of stairs, provided a door does not swing over the stairs.

A flight of stairs shall not have a vertical rise greater than 12 feet between floor levels or landings. The width of each landing shall not be less than the stairway served. Every landing shall have a minimum dimension of 36 inches measured in the direction of travel. Landings of shapes other than square or rectangular shall be permitted provided the depth at the walk line and the total area is not less than that of a quarter circle with a radius equal to the required landing width. **R311.7.6**

5. **Stairway walking surface.** The walking surface of treads and landings of stairways shall be sloped no steeper than one inch vertical in 48 inches horizontal (2-percent slope). **R311.7.7**

6. **Handrails.** Handrails shall be provided on at least one side of each continuous run of treads or flight with four or more risers. **R311.7.8**

Height. Handrail height, measured vertically from the sloped plane adjoining the tread nosing, or finish surface of ramp slope, shall be not less than 34 inches and not more than 38 inches. When handrail fittings or bendings are used to provide continuous transition between flights, transitions at winder treads, the transition from handrail to guardrail, or used at the start of a flight, the handrail height at the fittings or bendings shall be permitted to exceed the maximum height.. **R311.7.8.1**

Continuity. Handrails for stairways shall be continuous for the full length of the flight, from a point directly above the top riser of the flight to a point directly above lowest riser of the flight. Handrail ends shall be returned or shall terminate in newel posts or safety terminals. Handrails adjacent to a wall shall have a space of not less than 1 ½ inch between the wall and the handrails.

Exceptions:

1. Handrails shall be permitted to be interrupted by a newel post at the turn.
2. The use of a volute, turnout, starting easing or starting newel shall be allowed over the lowest tread. **R311.7.8.2**

Handrail grip size. All required handrails shall be of one of the following types or provide equivalent graspability.

1. **Type I.** Handrails with a circular cross section shall have an outside diameter of at least 1 ¼ inches and not greater than 2 inches. If the handrail is not circular it shall have a perimeter dimension of at least 4 inches and not greater than 6 ¼ inches with a maximum cross section of dimension of 2 ¼ inches.
2. **Type II.** Handrails with a perimeter greater than 6 ¼ inches shall provide a graspable finger recess area on both sides of the profile. The finger recess shall begin within a distance of ¾ inch measured vertically from the tallest portion of the profile and achieve a depth of at least 5/16 inch within 7/8 inch below the widest portion of the profile. This required depth shall continue for at least 3/8 inch to a level that is not less than 1 ¾ inches below the tallest portion of the profile. The minimum width of the handrail above the recess shall be 1 ¼ inches to a maximum of 2 ¾ inches. Edges shall have a minimum radius of 0.01 inches. **R311.7.7.3**

7. **Illumination.** All stairs shall be provided with illumination in accordance with Section R303.7. **R311.7.9**

All exterior and interior stairways shall be provided with a means to illuminate (not less than 1 footcandle) the stairs, including the landings and treads. Interior stairways shall be provided with an artificial light source located in the immediate vicinity of each landing. Exterior stairways shall be provided with an artificial light source located in the immediate vicinity of the top landing of the stairway. Exterior stairways providing access to a basement from the outside grade level shall be provided with an artificial light source located in the immediate vicinity of the bottom landing of the stairway.

Exception: An artificial light source is not required at the top and bottom landing, provided an artificial light source is located directly over each stairway section.

Light Activation The illumination of exterior stairs shall be controlled from inside the dwelling unit

Exception: Lights that are continuously illuminated or automatically activated. **R303.7**

Outdoor Lighting (attached to Buildings): Luminaires providing outdoor lighting and permanently mounted to a residential building or to other buildings on the same lot shall have 75 percent of permanently installed lamps in lighting fixtures be high efficacy lamps. **WSEC R404.1**

High Efficacy Lamps (definition): Compact fluorescent lamps, T-8 or smaller diameter fluorescent lamps,or lamps with minimum efficacy of:

1. 60 lumens per watt for lamps over 40 watts;
2. 50 lumens per watt for lamps over 15 watts to 40 watts;
3. 40 lumens per watt for lamps 15 watts or less.

Guards

8. **Porches, balconies, raised floor surfaces or fixed seating** located more than 30 inches above the floor or grade below shall have guards not less than 36 inches in height. Open sides of stairs with a total rise of more than 30 inches above the floor or grade below shall have guards not less than 34 inches in height measured vertically from the nosing of the treads. **Porches and decks which are enclosed with insect screening** shall be provided with guards where the walking surface is located more than 30 inches above the floor or grade below. **. R312.1.1, R312.1.2**

9. **Guard opening limitations.** Required guards on open sides of stairways, raised floor areas, balconies and porches shall have intermediate rails or ornamental closures which do not allow passage of a sphere 4 inches or more in diameter.

Exceptions:

1. The triangular openings formed by the riser, tread and bottom rail of a guard at the open side of a stairway are permitted to be of such a size that a sphere 6 inches cannot pass through.
2. Openings for required guards on the sides of stair treads shall not allow a sphere 4 3/8 inches to pass through. **R312.3**

10. Guard Design Strength: Guards shall be designed to resist lateral force of a single 200 lbs. point load applied at any location along the top, and in-fill materials shall resist 50 lbs. applied over one square foot. See King County Standard Deck Details for acceptable railing attachment. **Table R301.5**

Weathering Damage-Woods Exposed to the Weather; Treated Wood and Connectors

11. **All wood exposed to weather, in contact with concrete or within 8 inches of exposed Ground shall be** pressure treated or decay-resistant heartwood of redwood, black locust, or cedars.

12. **Load-bearing dimension lumber** ...shall be identified by a grade mark of a lumber grading or inspection agency that has been approved by an accreditation body that complies with DOC PS 20. In lieu of a grade mark, a certification of inspection issued by a lumber grading or inspection agency meeting the requirements of this section shall be accepted. **R502.1, R602.1, R802.1**

13. **Lumber and plywood required to be pressure-preservative-treated** in accordance with Section R318.1 shall bear the quality mark of an approved inspection agency that maintains continuing supervision, testing and inspection over the quality of the product and that has been approved by an accreditation body that complies with the requirements of the American Lumber Standard Committee treated wood program.. Field-cut ends, notches, and drilled holes of pressure-preservative-treated wood shall be retreated in the field in accordance with AWPA M4. **R318.1.1, R318.1.2**

14. **Wood/plastic composites**: Deck boards, stair treads, handrails and guardrail systems or their packaging shall bear a label that indicates compliance to ASTM D 7032 and includes the maximum allowable span. Wood/plastic composites shall be installed in accordance with the manufacturer's instructions. **R317.4**

15. **Fasteners** in preservative-treated and fire-retardant-treated wood. Fasteners for pressure-preservative and fire-retardant-treated wood shall be of hot-dipped zinc-coated galvanized steel, stainless steel, silicon bronze or copper. Coating types and weights for connectors in contact with preservative-treated wood shall be in accordance with the connector manufacturer's recommendations. In the absence of manufacturer's recommendations, a minimum of ASTM A 653 type G185 zinc-coated galvanized steel, or equivalent, shall be used.

Exceptions:

1. One-half-inch diameter or larger steel bolts.
2. Fasteners other than nails and timber rivets shall be permitted to be of mechanically deposited zinc- coated steel with coating weights in accordance with ASTM B 695, Class 55 minimum
3. Plain carbon steel fasteners in SBX/DOT and zinc borate preservative-treated wood in an interior, dry environment shall be permitted. **. R317.3.1**

Footings and Supporting Structure

16. **Strength of concrete** shall be 3000 psi for concrete exposed to weather: garage floor slabs, carport floor slabs and porches per Table R402.2

17. **Minimum size of footings.** Minimum sizes shall be as set forth in Table 403.1 and Figure 403.1(1). Spread footings shall be at least 6 inches in thickness. Footing projections shall be at least 2 inches in thickness and shall not exceed the thickness of the footing. **The size of footings supporting piers and columns** shall be based on the tributary load and allowable soil pressure in accordance with IRC Table R401.4.1. **R403.1.1.**

18. **Minimum depth.** All exterior footings shall be placed at least 12 inches for sites at below 1000 ft. elevation and 18 inches for sites above 1000 ft. elevation below the undisturbed ground and/or shall extend below the frost line specified in Table R301.2(1). When topsoils or subsoils are compressible or shifting, they shall be removed to a depth and width sufficient to assure stable moisture content in each active zone and shall not be used as fill. **R403.1.4, R401.4.2**

19. Posts, poles, and columns. Posts, poles and columns supporting permanent structures that are embedded in concrete in direct contact with the ground or embedded in concrete exposed to the weather shall be approved pressure preservative treated wood suitable for ground contact use. **R317.1.3**

20. Post embedded support: Post framed or pole buildings that employ posts or columns to resist the axial and lateral loads imposed upon the building do not meet the prescriptive building design provisions in the International Residential Code. Structures designed according to Standard Deck Details with knee bracing or embedded posts shall be deemed in compliance, otherwise structural calculations and detailed plans are required and shall be stamped and signed by an engineer or architect licensed by the State of Washington. Construction of the building shall be in strict accordance with the engineered design details. **R301.1.3**

21. Footings on or adjacent to slopes. The placement of buildings and structures on or adjacent to slopes steeper than 1 unit vertical in 3 units horizontal (33.3-percent slope) shall conform to Sections R403.1.7.1 through R403.1.7.4. **R403.1.7**

- **Building clearances from ascending slopes.** In general, buildings below slopes shall be set a sufficient distance from the slope to provide protection from slope drainage, erosion and shallow failures. Except as provided in Section R403.1.7.4 and Figure R403.1.7.1, the shown criteria will be assumed to provide this protection. Where the existing slope is steeper than on unit vertical in one unit horizontal (100-percent slope), the toe of the slope shall be assumed to be at the intersection of a horizontal plane drawn tangent to the slope at an angle of 45 degrees to the horizontal. Where a retaining wall is constructed at the toe of the slope, the height of the slope shall be measured from the top of the wall to the top of the slope. **R403.1.7.1**
- **Footing setback from descending slope surfaces.** Footings on or adjacent to slope surfaces shall be founded in material with an embedment and setback from the slope surface sufficient to provide vertical and lateral support for the footing without detrimental settlement. Except as provided for in Section R403.1.7.4 and Figure R403.1.7.1, the shown setback is deemed adequate to meet the criteria. Where the slope is steeper than one unit vertical in one unit horizontal (100-percent slope), the required setback shall be measured from an imaginary plane 45 degrees to the horizontal, projected from the toe of the slope. **R403.1.7.2**

22. The columns shall be restrained to prevent lateral displacement. Wood columns shall not be less in nominal size than 4 inches by 4 inches and steel columns shall not be less than 3-inch-diameter standard pipe or approved equivalent. The installation of knee braces or embedded posts into concrete per attached Standard Deck Details are acceptable methods of compliance, otherwise provide structural calculations and details for lateral resistance design. **R407.3**

23. Sawn lumber. Notches in solid lumber joists, rafters and beams shall not exceed one-sixth of the depth of the member, shall not be longer than one-third of the depth of the member and shall not be located in the middle one-third of the span. Notches at the ends of the member shall not exceed one-fourth the depth of the member. The tension side of members 4 inches or greater in nominal thickness shall not be notched except at the ends of the members. The diameter of holes bored or cut into members shall not exceed one-third the depth of the member. Holes shall not be closer than 2 inches to the top or bottom of the member, or to any other hole located in the member. Where the member is also notched, the hole shall not be closer than 2 inches to the notch. **R502.8.1**

24. Engineered wood products. Cuts, notches and holes bored in trusses, structural composite lumber, structural glue-laminated members or I-joists are prohibited except where permitted by the manufacturer's recommendations or where the effects of such alterations are specifically considered in the design of the member by a registered design professional. **R502.8.2**

25. Waterproof deck: Decks may be covered with approved roof coverings secured to the building or structure in accordance with the provisions of chapter 9. Roof assemblies shall be designed and installed in accordance with this code and the approved manufacturer's installation instructions such that the roof assembly shall serve to protect the building or structure. Roof deck covering materials shall be delivered in packages bearing the manufacturer's identifying marks and approved testing agency labels when required. **R903.1**

26. Flashing: Flashings shall be installed in a manner that prevents moisture from entering the wall and roof through joints in copings, through moisture permeable materials and at intersections with parapet walls and other penetrations through the roof plane.

Flashings shall be installed at wall and roof intersections, wherever there is a change in slope or direction and around openings. A flashing shall be installed to divert the water away from where the edge of a sloped roof intersects a vertical sidewall. Where flashing is of metal, the metal shall be corrosion resistant with a thickness of not less than 0.019 inch (No. 26 galvanized sheet). **R903.2**

27. Drainage: Unless the surface is sloped to drain over the edges, drains shall be installed at each low point. Where drains are required, secondary emergency overflow drains or scuppers shall be provided where the perimeter construction extends above the deck in such a manner that water will be entrapped if the primary drains allow buildup for any reason. Overflow drains having the same size as the main drains shall be installed with the inlet flow line located 2 inches above the low point of the roof deck, or overflow scuppers having three times the size of the main drains and having a minimum opening height of 4 inches shall be installed in the adjacent parapet walls with the inlet flow located 2 inches above the low point being served. The installation and sizing of overflow drains, leaders and conductors shall comply with Sections 1106 and 1108 as applicable of the International Plumbing Code. **R903.4**