KingCounty

Finance and Business Operations Division
Procurement and Contracts Services Section
Department of Executive Services

CNK-ES-0340
3rd Floor
401 5th Avenue
SEATTLE, WA 98104

206-263-9400 Ph
206-296-7676 Fax
TTY Relay: 771
www.kingcounty.gov

CONTRACTOR:
FLEETPRIDE INC
1302 W MAIN ST

AUBURN, WA 98001 United States
Fax: (253) 9397551

SHIP TO:
KC DES FBOD PCSS GOODS AND SERVICES
401 5TH AVE, CNK-ES-0340
SEATTLE, WA 98104

BILL TO:
KC DES FBOD ACCOUNTS PAYABLE
401 5TH AVE, CNK-ES-0320
SEATTLE, WA 98104

CONTRACT

CONTRACT NO.	REVISION	PAGE
5875963	0	1 of 1

CREATION DATE	BUYER
03-AUG-2016	PATRICIA REID
DATE OF REVISION	**BUYER**

CONTRACTOR NO	PAYMENT TERMS	FREIGHT TERMS	FOB	SHIP VIA	CONFIRM TO
4419	NET30DAYS	PREPAID AND ALLOW	DESTINATION	Seller Chooses	Telephone: (253) 939-7274

DESCRIPTION

Contract Purchase Agreement

Furnish Baldwin Air Filters as requested by King County DOT-Transit personnel during the period August 9, 2016 through August 8, 2021, in accordance with King County Bid Number 1199-16 and the responding bid of FleetPride Inc., both incorporated by reference as if fully set forth herein..

Estimated annual value $13,000.

Individual standard Purchase Orders with unique Purchase Order numbers referencing this Contract Purchase Agreement will be issued by King County to authorize the purchase and payment of Goods and Services.

All invoices must reference the individual Standard Purchase Order number to avoid delay in payments.

Authorized Signature

Invitation to Bid

King County

Department of Executive Services
Finance and Business Operations Division
Procurement and Payables Section
206-263-9400 TTY Relay: 711

ADVERTISED DATE: MAY 31, 2016

Invitation to Bid (ITB) Title: Donaldson Air Filters, or Approved Equal

ITB Number: 1199-16-PLR

Due Date: June 21, 2016 - 2:00 p.m.

Buyer: Patty Reid, patty.reid@kingcounty.gov, 206-263-9304

Alternate Buyer: Julie Snider, julie.snider@kingcounty.gov, 206-263-9291

Furnish Donaldson air filters, or approved equal, as requested by King County DOT-Transit personnel in accordance with the attached instructions, requirements and specifications.

TOTAL BID PRICE: $ 12,909.00

NO PRE-BID CONFERENCE	Sealed Bids are hereby solicited and will only be received by: King County Procurement & Payables Section Chinook Building, 3rd Floor 401 Fifth Avenue Seattle, WA 98104 Office Hours: 8:00 a.m. – 5:00 p.m. Monday - Friday

BIDDERS SHALL COMPLETE AND SIGN THE FORM BELOW.

We acknowledge that all Addenda have been examined as part of the Contract documents. The submittal is signed by an authorized representative of the Bidder accepting all terms and conditions contained in the bid and any addenda. We acknowledge that attaching our terms and conditions or modifying the ITB terms and conditions may result in our bid being rejected.

Company Name FLEETPRIDE		
Address 600 S DAKOTA ST		City/State /Postal Code SEATTLE/WA/98108
Signature	Print name and title STACY KLOTZ	
Email STACY.KLOTZ@FLEETPRIDE.COM	Phone 206-343-1500	Fax 206-343-1499
Company Headquarters Located in State/Province of IRVING/TEXAS		

Upon request, this Invitation to Bid will be provided in alternative formats such as Braille, large print, audiocassette or computer disk for individuals with disabilities.

"ALERT"

For firms headquartered and/or located in the state of North Carolina

At the direction of King County Executive Dow Constantine, King County agencies are precluded from doing business with companies headquartered within the state of North Carolina. This action is a direct result of that state government's recent enactment of House Bill 2. This legislation excludes lesbian, gay, and transgender people from the law's protection while simultaneously barring cities and counties from passing their own protections for LGBT people; additionally, it bars people from using bathrooms that do not match their birth gender. Here in King County, named after the Reverend Dr. Martin Luther King, Jr., we embrace the values of inclusion and diversity. We cannot allow the taxes and fees paid for by the communities we serve to be used to subsidize legally-sanctioned discrimination. Bids and proposals submitted by firms with headquarters located in North Carolina will be deemed non-responsible.

SECTION 1 Instruction to Bidders

1.1 Introduction

The purpose of this Invitation to Bid is to establish a contract to provide goods or services on an as-needed basis. Any quantities listed herein are for bidding purposes only and represent King County's estimated annual requirements. The County will be neither obligated nor restricted to the quantities or locations indicated.

1.2 Bid Submittal Procedure

The original and one (1) paper copy of this solicitation document shall be completed, signed and submitted along with an electronic copy in native format, submitted on compact discs or flash drives, one (1) required. Failure to return the solicitation document may result in disqualification of the Bidder. The original shall be noted or stamped "original". Bids and modifications thereof shall be enclosed in a sealed envelope, with the "Bid Opening Label" completed and affixed.

Bidders are encouraged to use recycled paper in the preparation of additional documents submitted with this solicitation, and shall use both sides of paper sheets where practicable.

Sealed bids shall contain all required attachments and information and be submitted to King County (hereinafter "County") no later than the date, time and place stated on the front of this ITB or as amended. The bidder shall show the title and number, the due date specified, and the name and address of the bidder on the face of the envelope. Bidders are cautioned that failure to comply may result in non-acceptance of the bid. The Bidder accepts all risks of late delivery of mailed bids or of mis-delivery regardless of fault. Bids properly and timely submitted will be publicly opened.

Bids will only be accepted from Contractors able to complete the delivery of goods or services described in the specifications. Joint ventures shall submit one bid for the team, with accompanying proof of the joint venture agreement.

If a company chooses not to submit a bid, the County requests the company advise the Buyer by email if they desire to remain listed for the subject of this ITB and state reason they did not submit a bid.

1.3 Electronic Commerce and Correspondence

King County is committed to reducing costs and facilitating quicker communication to the community by using electronic means to convey information. As such, most Invitations to Bid, Requests for Proposal, and Requests for Qualifications as well as related exhibits, appendices, and issued addenda can be found on the King County Internet Web Site, located at www.kingcounty.gov/procurement. Current bidding opportunities and information are available by accessing the "Solicitations" tab in the left hand column.

King County Procurement Services features an Online Vendor Registration (OVR) program that permits vendors, consultants and contractors to register their business with the County. This OVR system allows interested parties to either directly register their firm by creating a unique User ID, or to visit the website as a guest. Information regarding bid documents will be available to all users; however, site visitors accessing the site as a guest will not be able to document their interest in a project or add their name to the document holder's list. They will receive no automatic notification of issued addenda. As such, the County encourages full registration in order to directly communicate with document holders regarding any issued addenda or other important information concerning the solicitation.

After submittals have been opened in public, the County will post a listing of the businesses submitting proposals, and later, any final award determination.

Full information on vendor registration is available at the website.

1.4 Alterations to Document

Any addition, limitation or provision made or attached to the bid may render it non-responsive and/or irregular and be cause for its rejection.

Bidders may be required to submit additional documents as part of the bid package. Any alteration of such documents by erasure or interlineations shall be explained or noted and initialed by the Bidder.

1.5 Late Bids

Bids, modifications of bids, and withdrawal of bids received at the office designated in the solicitation after the exact hour and date specified for receipt will not be considered.

1.6 Cancellation of ITB or Postponement of Bid Opening

The County reserves the right to cancel the ITB at any time.

The County may change the date and time for submitting bids prior to the date and time established for submittal.

1.7 Addenda

If at any time, the County changes, revises, deletes, clarifies, increases, or otherwise modifies the ITB, the County will issue a written Addendum to the ITB.

1.8 Questions and Interpretation of the ITB

No oral interpretations of the ITB will be made to any Bidder. All questions and any explanations must be requested in writing and directed to the Buyer no later than seven

(7) days prior to the due date specified in the solicitation. Oral explanations or instructions are not binding. Any information modifying a solicitation will be furnished to all bidders by an addendum. Days, as referenced in this document, are calendar days unless otherwise specified.

Communications concerning this bid, with other than the listed Buyer may cause the Bidder to be disqualified.

1.9 Examination of Bid Documents

The submission of a bid shall constitute an acknowledgement upon which the County may rely that the Bidder has thoroughly examined and is familiar with the ITB, including any work site identified in the ITB, and has reviewed and inspected all applicable statutes, regulations, ordinances and resolutions addressing or relating to the goods or services to be provided hereunder.

The failure of a Bidder to comply with above requirement shall in no way relieve the Bidder from any obligations with respect to its bid or to any Contract awarded pursuant to this ITB. No claim for additional compensation shall be allowed which is based upon a lack of knowledge or misunderstanding of this ITB.

1.10 Modifications of Bid or Withdrawal of Bid Prior to Bid Due Date

Modifications or withdrawal of bids already received will be considered only if the requested modification or withdrawal is made prior to the scheduled closing time for the receipt of the bids. All modifications or withdrawals must be made in writing, over the signature of the Bidder.

1.11 Bid Withdrawal After Public Opening

Except for claims of error granted by the County, no Bidder may withdraw a bid after the date and time established for submitting bids, or before the award and execution of a Contract pursuant to this ITB, unless the award is delayed for a period exceeding the period for bid effectiveness.

Requests to withdraw a bid due to error must be submitted in writing along with supporting evidence for such claim for review by the county. Evidence must be delivered to the county within two (2) business days after request to withdraw. The County reserves the right to require additional records or information to evaluate the request. Any review by the County of a bid and/or any review of such a claim of error, including supporting evidence, creates no duty or liability on the County to discover any other bid error or mistake, and the sole liability for any bid error or mistake rests with the Bidder.

1.12 Cost of Bid and Samples

The County is not liable for any costs incurred by Bidder in the preparation and evaluation of bids submitted. Samples of items required must be submitted to the location and by the time specified. Unless otherwise specified, samples shall be submitted with no expense to the County. If not destroyed by testing, samples may be returned at the bidder's request and expense.

1.13 Collusion

By signing this bid, the Bidder certifies that they have not, either directly or indirectly, entered into any agreement, participated in any collusion, or otherwise taken any action in restraint of free competitive bidding. If the County determines that collusion has occurred among Bidders, none of the bids from the participants of such collusion will be considered. The County's determination will be final.

1.14 Bid Effective Date

All bids submitted shall be a firm bid for a minimum period of 90 days after the bid opening date, unless otherwise stated in writing in the bid. The County may request a Bidder grant an extension of the bid effective period.

1.15 Bid Price and Tax

The bid price shall include everything necessary for the prosecution and completion of the Contract, except as may be provided otherwise in this ITB.

Bid Prices shall include all freight charges, FOB to the designated delivery point(s).

Taxes: Sales/use taxes and Federal excise taxes shall not be included in the bid price. The County shall pay any Washington State sales/use taxes applicable to the Contract price or tender an appropriate amount to the Contractor for payment to Washington State. The Bidder is cautioned that taxes may be a factor in evaluating the total cost of bid.

The County is exempt from Federal excise and Transportation taxes. All other government taxes, duties, fees, licenses, permits, royalties, assessments and charges shall be included in the bid price. Said exemption is made pursuant to Chapter 32 of the Internal Revenue Code and Registry No. A-1 02374. When requested, an exemption certificate will be furnished.

1.16 Protest Procedures

King County has a process in place for receiving protests based upon invitation to bid or contract awards. The protest procedures are available at http://www.kingcounty.gov/depts/finance-business-operations/procurement/for-business/do-business/protest.aspx

SECTION 2 Bid Evaluation and Contract Award

2.1 Evaluation of Bids

Bids will be evaluated by the County to determine which bid, if any, may be deemed to be the low responsive bid from a responsible bidder, and should be accepted in the best interest of the County.

King County may use prompt payment discount terms in evaluation of this ITB; however, discounts terms of less the twenty (20) days will not be considered. Minimum acceptable payment terms by the County without benefit of twenty (20) day discount will be net 30 days.

In the event of a discrepancy between the unit price and the extended amount for a bid item, the unit price will govern.

2.2 Responsive and Responsible

Responsive

The County will consider all the material submitted by the Bidder, and other evidence it may obtain otherwise, to determine whether the Bidder is in compliance with the terms and conditions set forth in this ITB.

Responsible

In determining the responsibility of the bidder, the County may consider the ability, capacity and skill to perform the Contract or provide the service required (inspection of the bidder's facility may be required prior to award); the character, integrity, reputation, judgment and efficiency; financial resources to perform the Contract properly and within the times specified; the quality and timeliness of performance on previous contracts with the County and other agencies, including, but not limited to, the effort necessarily expended by the County and other agencies in securing satisfactory performance and resolving claims; compliance with federal, state and local laws and ordinances relating to public contracts; other information having a bearing on the decision to award the Contract.

Failure of a bidder to be deemed responsible or responsive may result in the rejection of a bid.

2.3 Financial Resources and Auditing

If requested by the County, prior to the award of a contract, the bidder shall submit proof of adequate financial resources available to carry out the execution and completion of work required by this contract.

King County reserves the right to audit the Contractor throughout the term of this contract to assure the Contractor's financial fitness to perform and comply with all terms and conditions contained within this contract. King County will be the sole judge in determining the Contractor's financial fitness in carrying out the terms of this contract.

2.4 Substitutions

When specific brands, materials, design, style or size are named, such specifications may be construed to be shown solely for the purpose of indicating the standard of quality, performance or intended use.

Where indicated, brands of equal quality, performance and use may be considered by the county, provided the bidder submits with their bid the brand, model, product number and other data necessary for comparison. The county retains the sole right to accept or reject substitutions.

2.5 Forms Required Before Contract Award

The Bidder shall submit, within five (5) Days of notification from the County, the applicable documents, insurance, bonds, sworn statements, and other requirements prior to award. Failure by the Bidder to submit required documents may result in rejection of the bid.

- Internal Revenue Service Form KC W-9, if not provided to King County within the past two (2) years.
- **Attachment A** – Buy America Certificate
- **Attachment B** – Certificate of Lobbying

2.6 Rejection of Bids

The County reserves the right to reject any bid for any reason or to waive informalities and irregularities in bids.

In consideration for the County's review and evaluation of its bid, the Bidder waives and releases any claims against the County arising from any rejection of any or all bids, including any claim for costs incurred by Bidders in the preparation and presentation of bids submitted in response to this ITB. In addition, Bidders waive the costs of providing additional information requested.

2.7 Single Bid Receipt

If the County receives a single responsive, responsible bid, the County may request an extension of the bid acceptance period and/or conduct a price or cost analysis on such bid. The Bidder shall promptly provide all cost or pricing data, documentation and explanation requested by the County to assist in such analysis. By conducting such analysis, the County shall not be obligated to accept the single bid; the County reserves the right to reject such bid or any portion thereof.

2.8 Public Disclosure of Bids

This Contract shall be considered a public document and will be available for inspection and copying by the public in accordance with the Public Records Act, Chapter 42.56 RCW (the "Act").

If the Contractor considers any portion of any record provided to King County under this Contract, whether in electronic or hard copy form, to be protected under law, the Contractor shall clearly identify each such portion with words such as "CONFIDENTIAL," "PROPRIETARY" or "BUSINESS SECRET." If a request is made for disclosure of such portion, the County will determine whether the material should be made available under the Act. If the County determines that the material is subject to disclosure, the County will notify the Contractor of the request and allow the Contractor ten (10) business days to take whatever action it deems necessary to protect its interests. If the Contractor fails or neglects to take such action within said period, the County will release the portions of record(s) deemed by the

County to be subject to disclosure. King County shall not be liable to the Contractor for inadvertently releasing records pursuant to a disclosure request not clearly identified by the Contractor as "CONFIDENTIAL," "PROPRIETARY" or "BUSINESS SECRET."

2.9 Contract Award

Contract award, if any, will be made by the County to the low, responsive, responsible Bidder. The County will have no obligations until an award is made and an order placed with the Contractor. The County reserves the right to award one or more contracts as determined to be in the County's best interest. The County may accept any individual item, or group of items, or schedules of any bid, unless otherwise stated herein.

A written award mailed or otherwise furnished to a Contractor within the time for acceptance shall be a binding contract.

SECTION 3 Standard Contractual Terms and Conditions

3.1 Administration

This Contract is between the County and the Contractor who shall be responsible for providing the goods or services described herein. The County is not party to defining the division of work between the Contractor and its Subcontractors. The Contractor represents that it has or shall obtain all duly licensed or qualified personnel, materials and equipment required to perform work hereunder.

The Contractor's performance under this Contract may be monitored and reviewed by a Project Manager appointed by the County. Reports and data required to be provided by the Contractor shall be delivered to the Project Manager or Buyer. Questions by the Contractor regarding interpretation of the terms, provisions and requirements of this Contract shall be addressed to the Buyer or Project Manager for response.

3.2 Contract Amendments

No oral order or conduct by the County shall constitute a Contract Amendment. Contract Amendments shall only be effective upon written notification by the County. The County reserves the right to amend the contract to add or delete goods or services within the intended scope of this contract. This may include, but is not limited to approval of replacements for discontinued items, add items of like function, or similar in nature or purpose to the originally listed products; the provision of ancillary services in response to minor changes in County needs; extend the contract to include optional terms.

Cost or Price Analysis may be required by the County for the evaluation of contract modifications, terminations, revision to contract requirements or other circumstances as determined by the County.

3.3 Invoices and Payment

The Contractor shall submit properly certified invoices to King County. The invoice(s) shall contain the following information:

- Purchase Order/Contract Number
- Item Number(s)
- Description of supplies or services
- Quantities
- Unit prices
- Extended totals
- Discounts, if applicable

For services, identify specific deliverables, and/or hourly rates, hours worked, total hours or related fees.

The Contractor shall send the original invoice to the remit to address on the purchase order. The County will take advantage of any prompt payment discount terms bid. Discount periods shall be extended if the invoice is returned for credit or correction.

When a purchase order is issued against this Contract that has the potential for multiple or partial deliveries, a separate invoice shall be generated for each completed delivery accepted by the County.

Failure to comply with these requirements or to provide an invoice in conformance with the contract may delay payment.

Upon acceptance of payment, the Contractor waives any claims for the goods or services covered by the Invoice. No advance payment shall be made for the goods or services furnished by Contractor pursuant to this Contract.

King County will not be bound by prices contained in an invoice that are higher than those in the currently approved price list. If a price increase has not been accepted in writing by King County, the invoice may be rejected and returned to the Contractor for a correction.

3.4 Rejection of Goods Or Services

After award, the Buyer or authorized County representative shall have the option of rejecting or refusing delivery of any and all goods or services which are not in strict conformity with the requirements of the specification and the bid. All rejected goods or services shall be promptly replaced or re-performed and be subject to approval by the County. All replacement goods and services shall be provided at the Contractor's own expense.

3.5 Re-procurement Costs

When a Contractor fails to furnish goods or services in accordance with the terms of this Contract, and the County must purchase at a price greater than the contract price, the difference may be charged to the Contractor. The County may exercise this charge as a credit against invoices due the Contractor.

3.6 Termination For Convenience/Default/Non-appropriation

A. Termination for Convenience

The County for its convenience may terminate this Contract, in whole or in part, at any time by written notice sent certified mail, return receipt requested, to the Contractor. After receipt of a Notice of Termination ("Notice"), and except as directed by the County, the Contractor shall immediately stop work as directed in the Notice, and comply with all other requirements in the Notice. The Contractor will be paid its costs, including necessary and reasonable Contract close-out costs and profit on that portion of the work satisfactorily performed up to the date of termination as specified in the notice. The Contractor shall promptly submit its request for the termination payment, together with detailed supporting documentation. If the Contractor has any property in its possession belonging to the County, the Contractor shall account for the same and dispose of it in the manner the County directs. All termination payment requests may be subject to Cost or Price Analysis to determine reasonableness and compliance with the Contract and applicable laws and regulations.

B. Termination for Default

If the Contractor does not deliver work in accordance with the Contract, or the Contractor fails to perform in the manner called for in the Contract, or the Contractor fails to comply

with any material provisions of the Contract, the County may terminate this Contract, in whole or in part, for default as follows:

A Notice to Cure will be served on the Contractor by certified mail (return receipt requested) or a delivery service capable of providing a receipt. The Contractor shall have ten (10) Days from the date the Notice to Cure was served to cure the default or provide the County with a detailed written plan, which indicates the time and methods needed to bring the work into compliance and cure the default.

If the Contractor has not cured the default or the plan to cure the default is not acceptable to the County, the County may terminate the Contract. Termination shall occur by serving a Notice of Termination by certified mail (return receipt requested) or delivery service capable of providing a receipt on the Contractor setting forth the manner in which the Contractor is in default and the effective date of termination.

The Contractor will only be paid for work delivered and Accepted, or work performed in accordance with the manner of performance set forth in the Contract less any damages to the County caused by or arising from such default. All termination payment requests are subject to Cost or Price Analysis to verify compliance with the Contract and applicable laws and regulations.

The termination of this Contract shall in no way relieve the Contractor from any of its obligations under this Contract nor limit the rights and remedies of the County hereunder in any manner.

C. Termination for Non-Appropriation

1. If expected or actual funding is withdrawn, reduced or limited in any way prior to [Final Acceptance and/or Completion of the Project], the County may, upon written notice to the Contractor, terminate this Contract in whole or in part for lack of appropriation. Such termination shall be in addition to the County's rights to terminate for convenience or default. In the event of termination under this section the following shall apply:

    a. Subject to subsection b., the County will be liable only for payment in accordance with the terms of this Contract for Work performed prior to the effective date of termination;

    b. Payment, if any, associated with such termination shall not exceed the appropriation for the biennium in which termination occurs; and

    c. The Contractor shall be released from any obligation to provide further Work under the Contract affected by the termination.

2. Notwithstanding subsection 1, funding of this Contract beyond the current biennium is conditional upon the appropriation by the County Council of sufficient funds to support the Work described in this Contract. Otherwise, the Contract shall terminate on December 31 of the current biennium.

3.7 Force Majeure

The term force majeure shall include, without limitation by the following enumeration: acts of nature, acts of civil or military authorities, fire, accidents shutdowns for purpose of emergency repairs, industrial, civil or public disturbances, causing the inability to perform the requirements of this Contract. If any party is rendered unable, wholly or in part, by a force majeure event or any event cause not within such party's control, to perform or comply with any obligation or condition of this Contract, upon giving notice and reasonably full particulars to the other party, such obligation or condition shall be suspended only for the time and to the extent commercially practicable to restore normal operations. In the event the Contractor ceases to be excused pursuant to this provision, then the County shall be entitled to exercise any remedies otherwise provided for in this Contract, including Termination for Default.

Whenever a force majeure event causes the Contractor to allocate limited resources between or among the Contractor's customers, the County shall receive no less priority in respect to such allocation than any of the Contractor's other customers.

3.8 Taxes, Licenses, and Certificate Requirements

This Contract and any of the work provided hereunder is contingent and expressly conditioned upon the ability of the Contractor to provide the specified goods or services consistent with applicable federal, state or local laws and regulations. If, for any reason, the Contractor's required compliances are terminated, suspended, revoked or in any manner modified from their status at the time this Contract becomes effective, the Contractor shall notify the County immediately of such condition in writing.

The Contractor and subcontractor(s) shall maintain and be liable for all taxes (except sales/use taxes), fees, licenses, permits and costs as may be required by applicable federal, state or local laws and regulations as applicable to the work under this Contract.

3.9 Assignment

Neither party shall assign any interest, obligation or benefit under or in this Contract or transfer any interest in the same, whether by assignment or novation, without prior written consent of the other party. If assignment is approved, this Contract shall be binding upon and inure to the benefit of the successors of the assigning party. This provision shall not prevent the Contractor from pledging any proceeds from this Contract as security to a lender so long as King County Policy Fin 10-1-1 (AP). If assignment is approved, it shall be accepted by either party upon the posting of all required bonds, securities and the like by the assignee and the written agreement by assignee to assume and be responsible for the obligations and liabilities of the Contract, known and unknown, and applicable law.

3.10 Indemnification and Hold Harmless

To the maximum extent permitted by law and except to the extent caused by the sole negligence of the County, the Contractor shall indemnify and hold harmless the County, its officers, officials, agents and employees, from and against any and all suits, claims, actions, losses, costs, penalties and damages of whatsoever kind or nature arising out of, in connection with, or incident to the goods and/or services Provided by or on behalf of the Contractor. In addition, the Contractor shall assume the defense of the County and its officers and

employees in all legal or claim proceedings arising out of, in connection with, or incidental to such goods and/or services: shall pay all defense expenses, including reasonable attorney's fees, expert fees and costs incurred by the County on account of such litigation or claims. This indemnification obligation shall include, but is not limited to, all claims against the County by an employee or former employee of the Contractor or its Subcontractors, and the Contractor, by mutual negotiation, expressly waives all immunity and limitation on liability, as respects the County only, under any industrial insurance act, including Title 51 RCW, other Worker's Compensation act, disability benefit act, or other employee benefit act of any jurisdiction which would otherwise be applicable in the case of such claim. In the event that the County incurs any judgment, award and/or cost including attorney's fees arising from the provisions of this subsection, or to enforce the provisions of this subsection, any such judgment, award, fees, expenses and costs shall be recoverable from the Contractor. In the event of litigation between the parties to enforce the rights under this subsection, reasonable attorney fees shall be allowed to the substantially prevailing party.

In the event the County incurs attorney fees and/or costs in the defense of claims under this provision such attorney fees and costs shall be recoverable from the Contractor. In addition King County shall be entitled to recover from the Contractor its attorney fees, and costs incurred to enforce the provisions of this section.

The indemnification, protection, defense and save harmless obligations contained herein shall survive the expiration, abandonment or termination of this Contract.

Nothing contained within this provision shall affect and/or alter the application of any other provision contained within this Contract.

3.11 Applicable Law and Forum

Except as hereinafter specifically provided, this Contract shall be governed by and construed according to the laws of the State of Washington, including, but not limited to, the Uniform Commercial Code, Title 62A RCW. Any claim or suit concerning this Contract shall only be filed in either the King County Superior Court or U.S. District for the Western District of Washington, in Seattle.

3.12 Conflicts of Interest and Non-Competitive Practices

By entering into this Contract to perform work, the Contractor represents that it has no direct or indirect pecuniary or proprietary interest, and that it shall not require any interest that conflicts in any manner or degree with the work required to be performed under this Contract. The Contractor shall not employ any Person or agent having any conflict of interest. In the event that the Contractor or its agents, employees or representatives hereafter acquires such a conflict of interest, it shall immediately disclose such conflict to the County. The County shall require that the Contractor take immediate action to eliminate the conflict up to and including termination for default.

By entering into this Contract to perform work, the Contractor represents that no Persons except as designated by Contractor shall be employed or retained to solicit or secure this Contract with an agreement or understanding that a commission, percentage, brokerage, or contingent fee would be paid; and no gratuities, in the form of entertainment, gifts or otherwise,

were bided or given by the Contractor or any of its agents; employees or representatives, to any official, member or employee of the County or other governmental agency with a view toward securing this Contract or securing favorable treatment with respect to the awarding or amending, or the making of any determination with respect to the performance of this Contract.

3.13 Disputes, Claims and Appeals

The Contractor shall address questions or claims regarding the Contract in writing to the Buyer and Project Manager, within ten (10) Days of the date on which the Contractor knows or should know of the question or claim. No claim by the Contractor shall be allowed if asserted after final payment under this Contract. No claim shall be allowed for any costs incurred more than ten (10) Days before the Contractor gives written notice, as required in this section. The Buyer and Project Manager shall ordinarily respond to the Contractor in writing with a decision, but absent such written response, the question or claim shall be deemed denied upon the tenth (10th) Day following receipt by the Buyer and Project Manager.

In the event the Contractor disagrees with the determination of the Buyer and Project Manager, the Contractor shall within five (5) Days of the date of such determination, appeal the determination in writing to the Procurement and Contract Services Section Manager. Such written notice of appeal shall include all information necessary to substantiate the appeal. The Procurement and Contract Services Section Manager shall review the appeal and make a determination in writing, which shall be final. Appeal to the Procurement and Contract Services Section Manager shall be a condition precedent to alternative dispute resolution or litigation.

Pending final decision of a dispute hereunder, the Contractor shall proceed diligently with the performance of the Contract and in accordance with the direction of the Buyer or Project Manager. Failure to comply precisely with the time deadlines under this subsection as to any claim shall operate as a waiver and release of that claim and an acknowledgement of prejudice to the County.

3.14 Maintenance of Records/Audits

The Contractor shall maintain, and shall require any sub-contractor to maintain, accounts and records, including personnel, property, financial, and programmatic records and such other records as may be deemed necessary by the County to ensure proper accounting for all contract funds and compliance with this Contract. All such records shall sufficiently and properly reflect all direct and indirect costs of any nature expended and services provided in the performance of this Contract. The Contractor shall make such documents available to the County for inspection, copying, and auditing upon request.

All records referenced in this section shall be maintained for a period of six (6) years after completion of work or termination hereof unless permission to destroy them is granted by the Office of the Archivist in accordance with RCW Chapter 40.14, or unless a longer retention period is required by law.

The Contractor shall provide access to its facilities, including those of any sub-contractor, to the County, the State and/or federal agencies or officials at all reasonable times in order to monitor and evaluate the services provided under this Contract.

The Contractor agrees to cooperate with County or its designee in the evaluation of the services provided under this Contract and to make available all information reasonably required by any such evaluation process. The results and records of said evaluation shall be maintained and disclosed in accordance with RCW Chapter 42.56.

If the Contractor expended a total of $500,000.00 or more in federal awards during its fiscal year, and is a non-profit organization, and is, under this Contract, carrying out or administering a program or portion of a program, it shall have an independent audit conducted in accordance with OMB Circular A-133, which shall comply with the requirements of GAAS (generally accepted auditing standards), GAO's Government Audit Standards and OMB Circular A-133, as amended and as applicable. Contractors expending federal awards from more than one source shall be responsible for determining if the combined financial awards are equal to or greater than $500,000.00. The Contractor shall provide one copy of the audit report to each County division providing federal awards to the Contractor no later than nine (9) months subsequent to the end of the Contractor's fiscal year.

3.15 Other Public Agency Orders

Other federal, state, county and local entities may utilize the terms and conditions established by this Contract if agreeable to all parties. The County does not accept any responsibility or involvement in the purchase orders or contracts issued by other public agencies.

If the contractor agrees to extend this contract to other governmental agencies, this contract is subject to an Administrative Fee (Fee) of 1% (.01). The Fee shall be based on total sales made to each governmental agency outside of King County's Departments, Divisions and Agencies, less sales tax, freight and any credits(s). The Fee shall be paid by the contractor, payable and remitted to King County Procurement and Contract Services Section not less than twice per year, on July 31st and January 31st for the first and second half of the year sales respectively. Fees submitted shall be accompanied by a sales report, reference the contract number, and show the total sales to other governmental agencies, excluding King County. The contractor shall not invoice the Fee to any contract user.

3.16 Environmentally Preferable Product Procurement Policy

Bidders able to supply products containing recycled and environmentally preferable materials that meet performance requirements are encouraged to offer them in bids and proposals.

The Bidder and Contractor shall use recycled paper for all printed and photocopied documents related to the submission of this solicitation and fulfillment of the contract and shall, whenever practicable, use both sides of the paper. (Reference: KCC 18.20).

3.17 Industrial and Hazardous Waste

The Contractor shall comply with all applicable local ordinances, state and federal statutes, and supporting rules and regulations governing the discharge of industrial waste to public sewer, private sewer, or side sewer tributary to the metropolitan sewer system.

Contractor shall handle and dispose of all hazardous wastes in compliance with all applicable local, state and federal laws and regulations, including the Resource Conservation and Recovery Act, the Washington Hazardous Waste Management Act, and applicable rules and

regulations of the Environmental Protection Agency and the Department of Ecology governing the generation, storage, treatment, transportation or disposal of hazardous wastes.

3.18 Patents and Royalties

The Contractor is responsible for paying all license fees, royalties or the costs of defending claims for the infringement of any intellectual property that may be used in performing this Contract.

3.19 Supported Employment Program

The County encourages the creation of supported employment programs for developmentally and/or severely disabled individuals. The County itself has such a program and is actively seeking to do business with those Contractors and Consultants that share this employment approach. If your firm has such a program, or intends to develop such a program during the life of this Contract, please submit Documentation supporting this claim with your bid. If you have questions, or need additional information, please contact the Community and Human Services Division, Developmental Disabilities Division, 206-263-9061.

3.20 Nondiscrimination and Equal Employment Opportunity

A. Nondiscrimination in Employment - During performance of this Contract, the Contractor agrees that it will not discriminate against any employee or applicant for employment because of the employee or applicant's sex, race, color, marital status, national origin, religious affiliation, disability, sexual orientation, gender identity or expression or age except by minimum age and retirement provisions, unless based upon a bona fide occupational qualification.

B. Equal Employment Opportunity Efforts - The Contractor will undertake equal employment opportunity efforts to ensure that applicants and employees are treated, without regard to their sex, race, color, marital status, national origin, religious affiliation, disability, sexual orientation, gender identity or expression or age. The Contractor's equal employment opportunity efforts shall include, but not be limited to, the following: employment, upgrading, demotion or transfer; recruitment or recruitment advertising; layoff or termination; rates of pay or other forms of compensation; and selection for training, including apprenticeships. The Contractor agrees to post in conspicuous places available to employees and applicants for employment notices setting forth this nondiscrimination clause. In accordance with KCC 12.16.010.J, "equal employment opportunity efforts" shall mean active efforts to ensure equal opportunity in employment that is free from all forms of discrimination.

C. Nondiscrimination in Subcontracting Practices - During the term of this Contract, the Contractor shall not create barriers to open and fair opportunities to participate in County contracts or to obtain or compete for contracts and subcontracts as sources of supplies, equipment, construction and services. In considering offers from and doing business with subcontractor and suppliers, the Contractor shall not discriminate against any person because of their sex, race, color, marital status, national origin, religious affiliation, disability, sexual orientation, gender identity or expression or age except by minimum age and retirement provisions, unless based upon a bona fide occupational qualification.

D. Compliance with Laws and Regulations - The Contractor shall comply fully with all applicable federal, state and local laws, ordinances, executive orders and regulations that prohibit discrimination. These laws include, but are not limited to, RCW Chapter 49.60, Titles VI and VII of the Civil Rights Act of 1964, the American with Disabilities Act, and the Restoration Act of 1987. In addition, King County Code chapters 12.16, 12.17 and 12.18 are incorporated herein by reference and the requirements in these code sections shall specifically apply to this contract. The Contractor shall further comply fully with any equal opportunity requirements set forth in any federal regulations, statutes or rules included or referenced in the contract documents.

E. Sanctions for Violations - Any violation of the mandatory requirements of the provisions of this Section shall be a material breach of contract, for which the Contractor may be subject to damages, withholding payment and any other sanctions provided for by contract and by applicable law.

3.21 Requirements of King County Living Wage Ordinance

In accordance with King County Ordinance 17909, as a condition of award for contracts for services with an initial or amended value of $100,000 or more, the Contractor agrees that it shall pay and require all Subcontractors to pay a living wage as described in the ordinance, to employees for each hour the employee performs a Measurable Amount of Work on this Contract. "Measurable Amount of Work" means a definitive allocation of an employee's time that can be attributed to work performed on a specific matter, but that is not less than a total of one hour in any one week period.

The requirements of the ordinance, including payment schedules, are detailed at http://www.kingcounty.gov/depts/finance-business-operations/procurement/about-us/Living-Wage.aspx

Violations of this requirement may result in disqualification of the Contractor from bidding on or being awarded a County contract for up to two years; contractual remedies including, but not limited to, liquidated damages and/or termination of the Contract; remedial action as set forth in public rule; and other civil remedies and sanctions allowed by law.

3.22 Non-Waiver of Breach

No action or failure to act by the County shall constitute a waiver of any right or duty afforded to the County under the Contract; nor shall any such action or failure to act by the County constitute an approval of, or acquiescence in, any breach hereunder, except as may be specifically stated by the County in writing.

3.23 Severability

Whenever possible, each provision of this Contract shall be interpreted to be effective and valid under applicable law. If any provision is found to be invalid, illegal, or unenforceable, then such provision or portion thereof shall be modified to the extent necessary to render it legal, valid, and enforceable and have the intent and economic effect as close as possible to the invalid, illegal, and unenforceable provision. If it is not possible to modify the provision to render it legal, valid and enforceable, then the provision shall be severed from the rest of this Contract. The invalidity, illegality or unenforceability of any provision shall not affect the

validity, legality or enforceability of any other provision of this Contract, which shall remain valid and binding.

3.24 Certification Regarding Debarment, Suspension and Other Responsibility Matters

Under King County Code 2.93.170, the King County Executive may debar a Consultant from consideration for award of contracts with the County for up to two years, and may suspend a Consultant from consideration for award of contracts with the County if there is probable cause for debarment for up to six months; for the following:

A. A Conviction within the five years preceding commencement of the debarment or suspension for commission of a criminal offense as an incident to obtaining or attempting to obtain a public or private contract or subcontract, or in the performance of the contract or subcontract;

B. Conviction within the five years preceding commencement of the debarment or suspension under state or federal statutes of embezzlement, theft, forgery, bribery, falsification or destruction of records, receiving stolen property or any other offense indicating a lack of business integrity or business honesty that currently, seriously and directly affects responsibility as a consultant to the county;

C. Conviction within the five years preceding commencement of the debarment or suspension under state or federal antitrust statutes arising out of the submission of bids or proposals;

D. Violation of state wage payment laws;

E. Violation of ethical standards set forth in contracts with the County;

F. Violation of contract provisions, such as the following, of a character that is regarded by the Executive to be so serious as to justify debarment action:

   1. Deliberate failure without good cause to perform in accordance with the specifications or within the time limit provided in the contract;

   2. Substantial failure to comply with commitments to and contractual requirement for participation by minority and women's business enterprises and equal employment opportunity; or

   3. A recent record of failure to perform or of unsatisfactory performance in accordance with the terms of one or more contracts, though failure to perform or unsatisfactory performance caused by acts beyond the control of the Consultant shall not be considered to be a basis for debarment; or

G. Any other cause that the Executive determines to be so serious and compelling as to affect responsibility as a Consultant to the county, including debarment by another governmental entity for any cause similar to those in this subsection;

The King County Executive may issue an Order of Suspension/Debarment under King County Code 2.93.170 and Executive Policies and Procedures CON 7-20(PR). Rights and remedies of the County under these provisions are besides other rights and remedies provided by law or under the Agreement.

3.25 Incorporation of Documents

The contract between the awarded bidder and King County shall include all documents mutually entered into at the time of contract award, specifically including the contract document, the solicitation, and the response to the solicitation. The contract must include, and be consistent with, the specifications and provisions stated in this solicitation. King County shall not be bound nor obligated to enter into or sign additional agreements and or documents other than those required by law.

SECTION 4 Specific Contractual Terms & Conditions

4.1 Contract Value

The estimated annual value of this contract is approximately $60,000 to $65,000. King County will not be limited, restricted or bound by this dollar value, nor shall the County be obligated to purchase any items contained in this ITB.

4.2 Contract Term

The term of this Contract will be **five (5) years**, subject to the termination clauses contained herein. King County reserves the right to extend the term if determined to be in the best interest of the County.

Contracts or purchase orders will be issued by the County. Contract amendments or change orders issued by the County may reflect modification(s) of contract terms, funding or other matters.

King County reserves the right to purchase the goods or services described herein from other sources. The Contractor does not have the exclusive right to fill all of the County's requirements for the goods or services awarded nor will the County be obligated to purchase the estimated annual quantity, or any quantity contained in this Contract.

4.3 Price Revisions

Prices shall remain firm for the duration of the Contract period. The Contractor may request price changes, and shall supply documentation satisfactory to King County such as changes to the Producers Price Index for the commodity, the Consumer Price Index for the Seattle-Tacoma-Bremerton area, or a manufacturer's published notification of price change(s). Reasonable price changes based on market conditions and price/cost analysis may be approved by King County.

King County will evaluate this information to determine if revising the pricing is considered fair and reasonable to the satisfaction of King County. Requests for any such change are to be made in writing to the Buyer in the Procurement Services Division office. A written change order issued by the County will institute the price adjustment, provide the new prices and establish the effective date for the new prices.

The Contractor shall endeavor to give the King County Procurement Services Section thirty (30) days but not less than fourteen (14) days written notice prior to the effective date of the price increase. The County may cancel the contract if the price increase request is not approved.

All price reductions at the manufacturer's or distributor's level shall be reflected in a reduction of the contract price(s) to King County retroactive to the effective date of the price reductions.

4.4 Shipping Charges

All prices shall include freight FOB to the designated delivery point. The County will reject requests for additional compensation for freight charges.

4.5 Packing Slips

Each delivery to the County shall have a packing slip enclosed that identifies the requester, purchase order number, part number, unit price and quantity of each part shipped. If the delivery is a partial shipment, indicate on the packing slip that it is not a complete shipment of that order and identify the items not shipped and provide a projected completion date of the order.

If the delivery combines items from more than one purchase order, separate packing slips shall be included in the shipment for each.

4.6 Use Report

The Contractor shall, if requested, submit to the Buyer a report of sales made to King County under this Contract. The report, in a format acceptable to King County, shall identify the detail required by the Buyer, which may include but is not limited to, delivery location, the item description, whether it's a Contract or non-Contract item, quantity, price and discount.

4.7 Warranty

The Contractor warrants that the work performed under this Contract shall be free from defects in material and workmanship, and shall conform to all requirements of this Contract, for a period of at least twelve (12) months from date of acceptance of such work by the County. Any work corrected shall be subject to this subsection to the same extent as the work initially provided.

The bidder shall provide, upon request by the County, their standard warranty. The warranty shall be specific for all components of the equipment regardless of whether these components were built by the original equipment manufacturer or outside suppliers. King County may avail itself of the bidder or manufacturer's standard warranty if more beneficial to the County.

Conducting of tests or inspections, acceptance, or the processing of payment(s) by the County shall not constitute a waiver of any rights under this Contract or in law. The termination of this Contract shall in no way relieve the Contractor from its warranty responsibility.

The Contractor shall ensure that the warranty requirements of this Contract are enforceable through and against the Contractor's suppliers, vendors, distributors and Subcontractors. The Contractor shall cooperate with the County in facilitating warranty related work by such suppliers, vendors, distributors and Subcontractors.

Contractor warrants that the Services shall in all material respects conform to the requirements of this Contract. Contractor warrants that qualified professional personnel with in-depth knowledge shall perform the Services in a timely and professional manner; and that the Services shall conform to the standards generally observed in the industry for similar Services. Contractor warrants that the Services shall be in compliance with all applicable laws, rules and regulations.

4.8 Warranty Remedies

Whenever possible, the contractor shall provide "on the spot" settlement of warranty claims or disputes, and authorize local representatives to act on the equipment manufacturer's behalf.

If at any time during the twelve (12) month period immediately following acceptance of any work covered by this Contract, Contractor or the County discovers one or more material defects or errors in the work or any other aspect in which the work materially fails to meet the provisions of the warranty requirements herein Contractor shall, at its own expense and within thirty (30) days of notification of the defect by the County, correct the defect, error or nonconformity.

The County shall give written notice of any defect to the Contractor. If the Contractor has not corrected defect within thirty (30) days after receiving the written notice, the County, in its sole discretion, may correct the defect itself. In the case of an emergency where the County believes delay could cause serious injury, loss or damage, the County may waive the written notice and correct the defect. In either case the County shall charge-back the cost for such warranty repair to the Contractor.

The Contractor is responsible for all costs of repair or replacement in order to restore the work to the applicable Contract requirements, including shipping charges, for work found defective within the warranty period, regardless of who actually corrects the defect.

4.9 Pricing of Spare Parts

The County shall have the right to conduct a cost or Price Analysis on specific spare parts if pricing appears to be in excess of standard industry pricing for similar parts. Any difference shall be subject to negotiations to the satisfaction of the County. The County is not required to purchase spare parts under this contract if it can purchase the same item(s) from another source under terms that are more advantageous to the County.

4.10 Product Return

The County reserves the right to return standard products to the Contractor for full refund or credit when the Contractor is notified of the return within 30 days of the County's receipt of products.

The County further reserves the right to return products, parts and supplies determined to be surplus and no longer required by the County. Parts and supplies eligible for return to the Contractor shall have been purchased for inventory or as spares, be unused, and in the same general condition as when received. The County will advise the Contractor of its intention to return any parts and supplies. The Contractor has no obligation to accept such goods more than 2 years after the County's receipt of said goods. The Contractor is allowed a restocking fee of not more than fifteen percent (15%) of the current price for the return of surplus products, parts and supplies.

The Contractor shall, at the County's option, issue a credit for the dollar value of the merchandise returned or refund that dollar amount (less any applicable restocking fee) to King County. This subsection does not apply to any merchandise made to order for the County.

SECTION 5 Federal Transit Administration (FTA) Requirements

This Contract shall be partially funded by the Federal Transit Administration (FTA). The following provisions include, in part, certain standard terms and conditions required by the U.S. Department of Transportation. All Contractual provisions required by the U.S. Department of Transportation, as set forth in FTA Circular 4220.1F, dated November 1, 2008, as are the requirements of the Master Agreement between King County and the U.S. Department of Transportation, including all "flow down" provisions to third party Contractors, Subcontractors and or suppliers are hereby incorporated by reference. Unless stated otherwise, all FTA mandated terms shall be deemed to control in the event of a conflict with other provisions contained in this Contract. The Contractor agrees not to perform any act, fail to perform any act, or refuse to comply with any County requests that would cause the County to be in violation of the FTA terms and conditions.

5.1 Changes in Federal laws, Regulations, Policies and Administrative Practices

New federal laws, regulations, and directives may be established after the date this Contract is established and may apply to this Contract. To achieve compliance with changing federal requirements, the Contractor agrees to accept all changed requirements that apply to this Contract and require Subcontractors comply with revised requirements as well.

Ref: FTA Master Agreement MA (16), 10-1-2009, Section 2(c).

5.2 Federal Changes

The Contractor agrees to comply with all applicable FTA laws, regulations and directives, including without limitation, those listed directly or by reference in the Master Agreement between the County and FTA, as they may be amended or promulgated from time to time during the term of this Contract. Contractor's failure to comply shall constitute a material breach of this Contract.

Ref: 49 CFR Part 18 and FTA Master Agreement MA (16), 10-1-2009, Section 2(c).

5.3 No Federal Government Obligations to Third Parties

The Contractor agrees that, notwithstanding any concurrence by the Federal Government in or approval of the solicitation or award of this Contract, absent the express written consent by the Federal Government, the Federal Government is not a party to this Contract and shall not be subject to any obligations or liabilities to the Contractor or any other party (whether or not a party to this Contract) pertaining to any matter resulting from this Contract.

The Contractor agrees to include the above clause in each subcontract financed in whole or in part with Federal assistance provided by FTA. It is further agreed that the clause shall not be modified, except to identify the Subcontractor who shall be subject to its provisions.

Ref: FTA Master Agreement MA (16), 10-1-2009, Section 2(f).

5.4 Equal Employment Opportunity

The Contractor shall not discriminate against any employee or applicant for employment because of race, color, creed, sex, disability, age, or national origin. The Contractor shall take affirmative action to ensure that the hiring of applicants and treatment of employees during employment is conducted without regard to their race, color, creed, sex, disability, age, or national origin. Such action shall include, but not be limited to, the following: employment,

upgrading, demotion or transfer, recruitment, advertising, layoff or termination, rates of pay or other forms of compensation, and selection for training, including apprenticeship. Contractor further agrees to insert a similar provision in all Subcontracts, except Subcontracts for standard commercial supplies or raw materials.

The Contractor agrees to post in conspicuous places, available to employees and applicants for employment, notices to be provided by the contracting officer setting forth the provisions of this non-discrimination clause.

Ref: Executive Order 11246, as amended by Executive Order 11375; Title VII of the Civil Rights Act, as amended, 42 USC § 2000e; Federal transit laws at 49 USC § 5332; section 4 of the Age Discrimination in Employment Act of 1967, as amended, 29 USC §§ 621-634; section 102 of the Americans with Disabilities Act, as amended, 42 USC §§ 12101 et seq.; 29 CFR Parts 1625 and 1630; 41 CFR § 60-1.4, Title IX of the Education Amendments of 1972, as amended, 20 USC §§ 1681 et seq., and with implementing U.S. DOT regulations, "Nondiscrimination on the Basis of Sex in Education Programs or Activities Receiving Federal Financial Assistance, " 49 CFR Part 25. .

5.5 Title VI Compliance

The Contractor shall comply with and shall ensure the compliance by all Subcontractors under this Contract with all the requirements imposed by Title VI of the Civil Rights Act of 1964 (42 USC 2000d) and the regulations of the federal Department of Transportation, "Nondiscrimination in Federally-Assisted Programs of the Department of Transportation -- Effectuation of Title VI of the Civil Rights Act," 49 CFR Part 21, (hereinafter "Regulations") as they may be amended from time to time. The Federal Government and or the County has a right to seek judicial enforcement with regard to any matter arising under Title IV of the Civil Rights Act and implementing regulations.

Ref: 49 CFR Part 21.19.

During the performance of this Contract, the Contractor, for itself, its assignees and successors-in-interest agrees as follows:

A. Nondiscrimination—49 CFR Part 26. The Contractor or Subcontractor shall not discriminate on the basis of race, color, national origin, or sex in the performance of this Contract. The Contractor shall carry out applicable requirements of 49 CFR Part 26 in the award and administration of United States Department of Transportation ("USDOT") — assisted contracts. Failure by the Contractor to carry out these requirements is a material breach of this Contract, which may result in the termination of this Contract or such other remedy, as the County deems appropriate.

B. Prompt Payment. The Contractor agrees to pay each Subcontractor under this Contract for satisfactory performance of its Contact no later than thirty (30) Days from the receipt of each payment the Contractor receives from the County. The Contractor agrees further to return retainage payments to each Subcontractor within thirty (30) Days after the Subcontractor's Work is satisfactorily completed. Any delay or postponement of payment from the above referenced period may occur only for good cause following written approval of the County. This clause applies to both DBE and non-DBE Subcontractors.

C. Solicitations for Subcontracts, Including Procurements of Materials and Equipment. In all solicitations either by competitive bidding or negotiation made by the Contractor for Work to be performed under a subcontract, including procurements of materials or leases of equipment, each potential Subcontractor or supplier shall be notified by the Contractor of the Contractor's obligations under this Contract and the Regulations relative to nondiscrimination on the grounds of race, color or national origin.

D. Sanctions for Noncompliance. In the event of the Contractor's noncompliance with the nondiscrimination provisions of this Contract, King County shall impose such contract sanctions as it or the FTA may determine to be appropriate, including, but not limited to:

1. Withholding of payments to the Contractor under the contract until the Contractor complies, and/or

2. Cancellation, termination, or suspension of the contract, in whole or in part.

E. Incorporation of Provisions. The Contractor shall include the provisions of paragraphs A through D in every Subcontract, including procurements of materials and leases of equipment, unless exempt by the Regulations or directives issued pursuant thereto. The Contractor shall take such action with respect to any subcontract or procurement as the County or the FTA may direct as a means of enforcing such provisions including sanctions for noncompliance. Provided, however, that in the event a Contractor becomes involved in, or is threatened with, litigation with a Subcontractor or supplier as a result of such direction, the Contractor may request the County to enter into such litigation to protect the interests of the County and, in addition, the Contractor may request the United States to enter into such litigation to protect the interests of the United States.

F. Contractor's List. Contractor is requested to submit the name, address, DBE/Non-DBE status, annual gross receipts, and age of all Subcontractors and suppliers bidding or quoting on DOT-assisted projects. **Compliance with the requirement to report the Contractor's List information is a matter of responsibility**. Contractor is requested to submit the Contractor's List prior to Contract Work.

5.6 Disadvantaged Business Enterprise Requirements.

A. DBE Participation. The County has not established a DBE goal for this Contract. In accordance with this section, the County has an overall annual DBE goal of thirteen percent (13%) for FTA assisted projects. However, the County requires that the Contractor report any actual DBE participation on this Contract to enable the County to monitor accurately DBE program compliance.

B. Reporting Requirement. The USDOT requires that the Contractor report any actual DBE participation on this Contract to enable the County to monitor DBE participation accurately and for reporting purposes.

C. DBE Eligibility. A DBE means a business certified as a DBE by the Washington State Office of Minority and Women's Business Enterprise (OMWBE).

D. DBE Listing. A Directory of DBE firms certified by the Washington State Office of Minority and Women's Business Enterprises (OMWBE) is available online at the following website address: http://www.omwbe.wa.gov/directory/directory.htm Telephone the OMWBE at 360-753-9693. **All DBE firms must be certified by OMWBE.**

E. Counting DBE Participation. The County will count DBE participation toward its annual overall DBE goal as provided for in 49 CFR 26.55.

1. DBE Contractor. The County will only count the Work a DBE Contractor performs with its own forces as well as the Work performed by DBE Subcontractors with their own work forces.

2. Joint Venture. When a DBE performs as a participant in a joint venture, King County will only count that portion of the total dollar value of the contract equal to the distinct, clearly defined portion of the Work that the DBE performs with its own forces.

3. Commercially Useful Function. The County will count expenditures to a DBE contractor only for DBEs who perform a commercially useful function on that contract.

   a. DBE performs a commercially useful function when it is responsible for execution of the Work of the Contract and is carrying out its responsibilities by actually performing, managing, and supervising the Work involved. To perform a commercially useful function, the DBE must also be responsible, with respect to materials and supplies used on the contract, for negotiating price, determining quality and quantity, ordering the material, installing (where applicable) and paying for the material itself.

   b. DBE does not perform a commercially useful function if its role is limited to that of an extra participant in a transaction, contract or project through which funds is passed in order to obtain the appearance of DBE participation.

      (1) A DBE does not perform a commercially useful function if it fails to exercise responsibility with its own work force for at least 30 percent of the total cost of its contract, or the DBE subcontracts a greater portion of the Work of a Contract than would be expected on the basis of normal industry practice for the type of Work involved.

4. Expenditures with DBEs. Expenditures with DBEs for materials or supplies shall be counted as provided in the following:

   a. **Manufacturer.** If the materials or supplies are obtained from a DBE manufacturer, count 100 percent of the cost of the materials or supplies towards the DBE goal. A manufacturer is a firm that operates or maintains a factory or establishment that produces, on the premises, the materials, supplies, articles, or equipment required under the contract and of the general character described by the specifications.

   b. **Regular Dealer.** If the materials or supplies are purchased from a DBE regular dealer, count 60 percent of the cost of the materials or supplies. A regular dealer is a firm that owns, operates, or maintains a store, warehouse, or other establishment in which the materials, supplies, articles or equipment of the general character described by the specifications and required under the contract are bought, kept in stock, and regularly sold or leased to the public in the usual course of business.

(1) To be a regular dealer a firm must be an established, regular business that engages, as its principal business and under its own name, in the purchase and sale or lease of the products in question.

c. A Person may be a regular dealer in such bulk items as petroleum products, steel, cement, gravel, stone, or asphalt without owning, operating, or maintaining a place of business, as provided in this Section (4)(b), if the Person both owns and operates distribution equipment for the products. Any supplementing of regular dealers' own distribution equipment shall be by a long-term lease agreement and not on an ad hoc or contract-by-contract basis. The cost of the materials and supplies themselves shall be counted.

5. Purchases from a DBE. With respect to materials or supplies purchased from a DBE who is neither a manufacturer nor a regular dealer, count the entire amount of fees or commissions charged for assistance in the procurement of the materials and supplies, or fees or transportation charges for the delivery of materials or supplies required on a job site, provided the fees are reasonable and typical for the services rendered. No part of the cost of the materials and supplies themselves shall be counted.

5.7 Disadvantaged Business Enterprise and Other Small Business Participation

The County encourages Contractors to carry out the following steps to facilitate DBE and other small business participation, which may be either on a direct basis in response to this solicitation or as a Subcontractor to a bidder.

A. Solicit through all reasonable and available means (e.g., attendance at pre-bid meetings, advertising and/or written notices) DBE and other small businesses that have the capability to perform the Work of the Contract.

B. Select portions of the Work to be performed by Subcontractors to increase the likelihood that DBE and other small businesses' goals will be achieved

C. Provide interested Subcontractors with adequate information about the plans, specifications, and requirements of the contract in a timely manner to assist them in responding to a solicitation.

D. Negotiate in good faith with interested DBEs and other small businesses.

E. Avoid rejecting DBEs and other small businesses as being unqualified without sound reasons based on a thorough investigation of their capabilities. The Contractor's standing within its industry, membership in specific groups, organizations, or associations and political or social affiliations (for example union vs. non-union employee status) are not legitimate causes for the rejection or non-solicitation of bids in the Contractor's efforts to obtain DBE and other small business participation.

F. Make efforts to assist interested DBEs and other small businesses in obtaining bonding, lines of credit, or insurance as required by the recipient or Contractor.

G. Make efforts to assist interested DBEs and other small businesses in obtaining necessary equipment, supplies, materials, or related assistance or services.

H. Effectively use the services of available minority/women community organizations, Contractors' groups, local, state, and Federal minority/women business assistance offices; Disadvantaged Business Enterprise and other organizations as allowed on a case-by-case basis to provide assistance in the recruitment and placement of DBEs and other small businesses.

5.8 Audit and Inspection of Records

In the case of all negotiated Contracts and Contracts for construction, reconstruction or improvement of facilities and equipment, which were entered into under other than competitive proposal procedures, Contractor agrees that the County, the Comptroller General of the United States or any of their duly authorized representatives, shall, for the purpose of audit and examination be permitted to inspect and reproduce as needed all work, materials, payrolls, and other data and records with regard to the project, and to audit the books, records and accounts with regard to the project. Further, Contractor agrees to maintain all required records for at least three (3) years after the County makes final payment and all other pending matters are closed.

Ref: 49 USC § 5325(g); 18 CFR Part 18.36 (i); 49 CFR Part 633.17; and FTA Master Agreement MA (16), 10-1-2009, Section 8 (c) and (d).

5.9 Buy America

The Contractor agrees to comply with 49 USC § 5323(j), 49 CFR Part 661, which provides that Federal funds may not be obligated unless steel, iron, and manufactured products used in FTA-funded projects are produced in the United States, unless a waiver has been granted by FTA or the product is subject to a general waiver.

General waivers are listed in 49 CFR 661.7 and include but are not limited to microcomputer equipment and Software for purposes of storing and processing data, and small purchases (currently less than $100,000) made with capital, operating, or planning funds. Separate requirements for rolling stock are set out at 5323(j)(2)(C), 5325(e)(f) and 49 CFR 661.11.

Contracts in excess of $100,000 require a Buy America Certificate, to be completed and submitted to the County with the bid, except those subject to a general waiver. A Contract that is not accompanied by a completed Buy America certification shall be rejected and subject to termination. This requirement does not apply to lower tier Subcontractors.

5.10 Access Requirements for Individuals with Disabilities

The County and the Contractor are required to comply with all applicable requirements of the Americans with Disabilities Act of 1990 (ADA), 42 USC §§ 12101, et seq.; Section 504 of the Rehabilitation Act of 1973, as amended, 29 USC § 794; and 49 USC § 5301(d), and the following regulations and any amendments thereto:

A. U.S. Department of Transportation regulations, "Transportation Services for Individuals with Disabilities (ADA)," 49 CFR Part 37;

B. U.S. Department of Transportation regulations, "Nondiscrimination on the Basis of Disability in Programs and Activities receiving from Federal Financial Assistance," 49 CFR Part 27;

C. U.S. Department of Transportation regulations, "Americans With Disabilities (ADA) Accessibility Specifications for Transportation Vehicles," 49 CFR Part 38;

D. U.S. Department of Justice (DOJ) regulations, "Nondiscrimination on the Basis of Disability in State and Local Government Services," 28 CFR Part 35;

E. U.S. Department of Justice regulations, "Nondiscrimination on the Basis of Disability by Public Accommodations and in Commercial Facilities," 28 CFR Part 36;

F. U.S. General Services Administration regulations, "Construction and Alteration of Public Buildings," 41 CFR Subpart 101-19;

G. U.S. Equal Employment Opportunity Commission (EEOC) "Regulations to Implement the Equal Employment Provisions of the Americans with Disabilities Act," 29 CFR Part 1630;

H. U.S. Federal Communications Commission regulations, "Telecommunications Relay Services and Related Customer Premises Equipment for the Hearing and Speech Disabled," 47 CFR Part 64, Subpart F; and

I. FTA regulations, "Transportation for Elderly and Handicapped Persons," 49 CFR Part 609.

5.11 Interest of Members of or Delegates of Congress

Pursuant to 41 USC § 22, no member of or delegate to the Congress of the United States shall be admitted to any share or part of this Contract or to any benefit arising there from.

5.12 Certification Regarding Debarment, Suspension and Other Responsibility Matters

This Contract is a covered transaction for purposes of 2 CFR part 1200. As such, the Contractor is required to verify that none of the Contractor, its principals, as defined at 49 CFR 29.995, or affiliates, as defined at 49 CFR 29.905, are excluded or disqualified as defined at 49 CFR 29.940 and 29.945.

The Contractor is required to comply with 2 CFR 1200, Subpart C and must include the requirement to comply with 2 CFR 1200, Subpart C in any lower tier covered transaction it enters into.

By signing and submitting this Contract, the Contractor certifies as follows:

The certification in this clause is a material representation of fact relied upon by King County. If it is later determined that the Contractor knowingly rendered an erroneous certification, in addition to remedies available to King County, the Federal Government may pursue available remedies, including but not limited to suspension and/or debarment. The Contractor agrees to comply with the requirements of 2 CFR 1200, Subpart C while this offer is valid and throughout the period of any Contract that may arise from this Contract. The Contractor further agrees to include a provision requiring such compliance in its lower tier covered transactions.

5.13 Disclosure of Lobbying Activities

Contracts in excess of $100,000 require a Certificate of Lobbying Activities, to be completed and submitted to the County with the proposal, as required by 49 CFR Part 20, "New Restrictions on Lobbying."

The Contractor certifies that it shall not and has not used Federal appropriated funds to pay any Person or organization for influencing or attempting to influence an officer or employee of any agency, a member of Congress, officer or employee of Congress, or an employee of a member of Congress in connection with obtaining any Federal Contract, grant or any other award covered by the Byrd Anti-Lobbying Amendment, 31 USC § 1352. The Contractor shall disclose the name of any registrant under the Lobbying Disclosure Act of 1995, codified at 2 USC § 1601 et seq., who has made lobbying contacts on its behalf with non-Federal funds with respect to that Federal Contract, grant or award covered by 31 USC § 1352. Such disclosures are to be forwarded to the County.

The Contractor shall include the language of this certification in all subcontract awards at any tier and require that all recipients of subcontract awards in excess of $100,000 shall certify and disclose accordingly.

Ref: 49 CFR Part 20, modified as necessary by 31 USC § 1352.

5.14 False or Fraudulent Statements or Claims

The Contractor acknowledges that if it makes, or causes to be made, a false, fictitious, or fraudulent claim, statement, submission, or certification to the County in connection with this project, the County reserves the right to pursue the procedures and impose on the recipient the penalties of 18 USC § 1001, 31 USC §§ 3729 and 3801 et seq., and/or 49 USC § 5307(k)(1), as may be appropriate. The terms of Department of Transportation regulations, "Program Fraud Civil Remedies," 49 CFR Part 31, are applicable to this project.

The Contractor agrees to include this clause in all subcontracts awarded under this Contract.

5.15 Energy Conservation

The Contractor agrees to comply with mandatory standards and policies relating to energy efficiency that are contained in the State Energy Conservation plan issued in compliance with the Energy Policy and Conservation Act, 42 USC §§ 6321 et seq., and 49 CFR Part 18. The Contractor agrees to include this clause in all subcontracts awarded under this Contract.

5.16 Air Pollution

The Contractor and suppliers may be required to submit evidence to the Project Manager that the governing air pollution criteria shall be met. This evidence and related documents shall be retained by the manager for on-site examination by FTA.

5.17 Environmental Requirements

The Contractor agrees to comply with all applicable standards, orders or requirements as follows:

A. Environmental Protection

The Contractor agrees to comply with the applicable requirements and implementing regulations of the National Environmental Policy Act of 1969, as amended, 42 USC §§ 4321, *et seq.*, consistent with Executive Order No. 11514, as amended, "Protection and Enhancement of Environmental Quality," 42 USC § 4321 note.

FTA statutory requirements on environmental matters at 49 USC § 5324(b); Council on Environmental Quality regulations on compliance with the National Environmental Policy Act of 1969, as amended, 42 USC § 4321 *et seq.* and 40 CFR Part 1500, *et seq.*; and joint FHWA/FTA regulations, "Environmental Impact and Related Procedures," 23 CFR Part 771 and 49 CFR Part 622.

B. Air Quality

The Contractor agrees to comply with all applicable standards, orders, or regulations issued pursuant to 42 USC § 7606. The Contractor agrees to report each violation to the County and understands and agrees that the County shall, in turn, report each violation as required to assure notification to FTA and the appropriate Environmental Protection Agency (EPA) Regional Office.

The Contractor agrees to include this clause in each subcontract exceeding $100,000 financed in whole or in part with Federal assistance provided by FTA.

Ref: 42 USC § 7606; 40 CFR Part 51, Subpart T; 40 CFR Part 85; 40 CFR Part 86; and 40 CFR Part 600.

C. Clean Water

The Contractor agrees to comply with all applicable laws, regulations, and directives issued pursuant to the Federal Water Pollution Control Act, as amended, 33 USC §§ 1251-1377. The Contractor agrees to report each violation to the County and understands and agrees that the County shall, in turn, report each violation as required to assure notification to FTA and the appropriate Environmental Protection Agency (EPA) Regional Office.

The Contractor agrees to protect underground sources of drinking water consistent with the provisions of the Safe Drinking Water Act of 1974, as amended, 42 USC §§ 300f through 300j-6.

The Contractor agrees to include these requirements in each subcontract exceeding $100,000 financed in whole or in part with Federal assistance provided by FTA.

Ref: 33 USC § 1251.

D. Use of Public Lands

The Contractor agrees that no publicly owned land from a park, recreation area, or wildlife or waterfowl refuge of national, state, or local significance as determined by the federal, state or local officials having jurisdiction thereof, or any land from a historic site of national, state, or local significance may be used unless the FTA makes the specific findings required by 49 USC § 303.

E. Mitigation of Adverse Environmental Effects

The Contractor agrees that if the Work should cause adverse environmental effects, the Contractor shall take all reasonable steps to minimize those effects in accordance with 49 USC § 5324(b), and all other applicable federal laws and regulations, specifically, the procedures of 23 CFR Part 771 and 49 CFR Part 622, 23 CFR 774.

F. Wild and Scenic Rivers

The Contractor agrees to comply with applicable provisions of the Wild and Scenic Rivers Act of 1968, as amended, 16 USC §§ 1271 -1287, relating to protecting components of the national wild and scenic river system, with applicable implementing U.S. Forest Service regulations, "Wild and Scenic Rivers," 36 CFR Part 297, and with applicable implementing U.S. Bureau of Land Management regulations, "Management Areas," 43 CFR 8350.

5.18 Preference for Recycled Products

To the extent practicable and economically feasible, the Contractor agrees to Provide a competitive preference for products and services that conserve natural resources and protect the environment and are energy efficient. Examples of such products may include, but are not limited to, products described in the United States EPA Guidelines at 40 CFR Part 247, implementing section 6002 of the Resource Conservation and Recovery Act, as amended, 42 USC § 6962.

5.19 Termination Provisions Required

All Contracts and subcontracts in excess of $10,000 shall contain contractual provisions or conditions that allow for termination for cause and convenience by the County including the manner by which it shall be effected and the basis for settlement.

Ref: FTA Circular 4220.1F § IV.2.b.

5.20 Breach Provisions Required

All Contracts in excess of $100,000 shall contain contractual provisions or conditions that shall allow for administrative, contractual, or legal remedies in instances where the Contractor violates or breaches the terms of this Contract, including sanctions and penalties as may be appropriate. The Contractor agrees to include this provisional requirement in all subcontracts in excess of $100,000 awarded under this Contract.

Ref: FTA Circular 4220.1F, § IV.2.B

SECTION 6 Technical Specifications

6.1 Introduction of Specifications

A. It is the intent of these specifications to describe the minimum acceptable performance standards for obtaining Donaldson Air Filters or approved equal. The quantity listed represents King County's anticipated annual requirements during the contract period and used in the bid evaluation analysis. The quantity listed may be purchased as needed throughout the contract term.

B. The Contractor shall advise the County at the time the order is placed, if the item is not available or will be backordered. King County shall be immediately notified by the Contractor if an existing order will be delayed or not be exactly as ordered.

C. The Contractor shall advise King County of product substitutes that are considered more environmentally safe as they become available.

6.2 Brand Name or Equal

When products of a specific brand(s), material(s), construction, design, style, or size are named, they indicate the quality level or performance required for the product(s) in the invitation to bid.

Following are the **salient characteristics** of the products in the Invitation to Bid:

A. Outlet Diameter: 5.98 Inches (152 MM)

B. Body Diameter Max: 12.52 Inches (318 MM)

C. Body Length: 15.00 Inches (381 MM)

D. Efficiency Test Std: ISO 5011

E. Rated Flow LR: 830 CFM (23.5 CMM)

F. Rated Flow MR: 1109 CFM (31.4 CMM)

G. Rated Flow HR: 1296 CFM (36.7 CMM)

H. Restriction LR: 4.02 In H2O (102 MM H2O)

I. Restriction MR: 5.98 In H2O (152 MM H2O)

J. Restriction HR: 7.99 In H2O (203 MM H2O)

K. Family: ECB

L. Type: Primary

M. Style: Round

N. Media Type: Cellulose

"Equal products" may be considered provided they meet the same form, fit, function and quality of the original products(s) specified. The bidder shall submit, within ten (10) business days of advertisement date, the brand, model, part number, MSDS, test results and any other documentation that can substantiate that the "Equal Products" are acceptable. An initial determination if the product is acceptable will be completed at least 5 days prior to bid opening. Any samples shall be provided to King County at no charge. These products shall

not void any warranty. The bidder shall be responsible for any direct and consequential damage to equipment caused by their products.

King County retains the sole right to accept or reject "Equal Products" that are bid and will communicate such decisions via formal addendum.

6.3 Order and Delivery Plan

Prior to contract award, the contractor will provide an order and delivery plan that lists contact names and phone numbers for ordering, expediting, and emergencies.

6.4 Site Visits

King County may request site visits prior to contract award or periodically during the contract period to determine the contractors' capability in meeting King County's needs.

6.5 Related Items

Requirements may change during the contract period. King County reserves the right to add related items to the contract, at any time, through the change order process. The pricing structure for the related items shall be the same as the items on the original contract.

SECTION 7 Bid Response

7.1 Rules of Price Evaluation

Bids meeting all requirements of this ITB will be evaluated on price. Bids stating price in effect at the time of shipment will not be accepted. The low bidder is defined as the responsible bidder, with a responsive bid meeting specifications that offers the lowest total bid price as determined as being in the best interest of King County.

7.2 Delivery

Contractor shall be notified of goods to be furnished under this contract by issue of purchase order from King County Transit Materials Management. Such orders may be issued any time during the contract period. All purchase orders are subject to the terms and conditions of this contract. In the event of conflict between a purchase order and the contract, the contract shall prevail.

Contractor shall provide faxed order confirmation within twenty-four (24) hours of receiving a King County purchase order. Within three (3) working days after purchase order confirmation, Contractor shall provide the Transit Materials Management Buyer a confirmed delivery schedule for each purchase order line item. All orders shall be delivered as soon as is practicable, but in no event later than thirty (30) days from receipt of purchase order. Goods shall be delivered, FOB destination, to the following location:

King County DOT-Transit
Atlantic Base
1555 Airport Way South
Seattle, WA 98134

Orders not received by the confirmed delivery date are subject to complete or partial cancellation by King County without any penalty imposed by the Contractor. All goods shall be delivered between the hours of 8:00 a.m. and 5:00 p.m., Monday through Friday.

7.3 Bidder's Contact Information

Primary Location:

A. Physical Address: 600 S DAKOTA ST, SEATTLE WA. 98108

Mailing Address: 600 S DAKOTA ST, SEATTLE WA. 98108

Name of Contact Person: STACY KLOTZ

Email: STACY.KLOTZ@FLEETPRIDE.COM

Telephone No. (Local/Toll Free): 206-343-1500

Fax No. (Local/Toll Free): 206-343-1499

UBI No.: 602-002-991

Washington State Contractor's License (if applicable): _____

State hours and days of operation:

Hours: 8 a.m. to 5 p.m. Days: MON to FRI

B. State your firm's preference for receiving purchase orders. (Check only one and enter the information if different from "A" above).

☐ E-mail:_____ ☑ Fax:_____

7.4 Remit Address (where payment will be mailed):

FLEETPRIDE

P.O. BOX 847118

DALLAS, TX 75284-7118

7.5 Retail and Stocking/Warehouse Facility Locations (if applicable)

The Contractor shall attach a separate list of the location(s) for all facilities including the address, contact name(s), email(s), telephone number(s), and fax number(s), for each facility.

7.6 Prompt Pay Discount

Prompt payment discounts offered by Contractors shall be used to calculate the low bid provided the discount offered allows a minimum of 20 days for payment. The number of days is calculated from the date of acceptance of goods or services or from the date a complete invoice is date stamped as received by King County, whichever event occurs last, and the check/warrant date. The County will take advantage of any prompt payment discount terms bid. Discount periods shall be extended if:

- The date printed on the invoice is more than three days earlier than the invoice receipt date;
- The delay is caused awaiting a credit memo, invoice correction, adjustment or reissue;
- An invoice is received prior to receiving goods ordered.

Prompt pay discount offered 0 **% -** _____ **Days, Net** 30

7.7 Purchasing Card (P-Card) Acceptance

Contractors are requested to have the capability of accepting the King County's authorized VISA Procurement Card (p-card) as a method of payment. Price change(s) or additional fee(s) may not be assessed when accepting the p-card as a form of payment. The Contractor may receive payment from King County by a p-card in the same manner as other VISA purchases.

VISA acceptance is preferred, but is not the exclusive method of payment.

Accept VISA cards: Yes ☑ No ☐

Additional purchasing (charge) cards accepted:

- ☑ America Express
- ☑ Discover
- ☑ MasterCard
- ☐ Other: _____
- ☐ _____
- ☐ _____
- ☐ _____

7.8 Pricing

In the event of a discrepancy between the unit price and the extended price, the unit price will prevail.

In the table below, fill in the Unit Price, Extended Price and Total Bid Price. If a part number has been discontinued, bidders shall insert the manufacturer's replacement part number and provide pricing for the replacement part.

If King County has approved products as equal to what is listed, bidders shall enter their approved equal brand and part number offered.

Item No.	Est. Annual Qty.	UOM	Part No.	Description	Brand Offered	Part No Offered	Unit Price	Extended Price
1	300	Each	B125003	Donaldson Air Filter, or approved equal	BALDWIN	PA2821	43.03	12,909.00
							Total Bid Price (place this amount on the cover of the ITB)	12,909.00

7.9 References

List the names and addresses of four (4) customers, for whom the bidder has performed or provided similar goods and/or services, preferably in Washington State, for a period not less than one (1) year. Include dates, contact persons and telephone numbers. Should any reference submitted by a bidder be found unsatisfactory, King County, at its sole option, may reject that bidder's bid. King County shall be the sole judge in determining a satisfactory/unsatisfactory reference response. **Reference must be submitted with bid.**

Company Name: TUCCI AND SONS
Company Address: 4224 WALLER RD E TACOMA WA
Company Phone: 253-606-7207
Contact Person: CLIFF HOLMGREN
Dates: 1995-DATE

Company Name: BRUNDAGE BONE
Company Address: 1055 4TH AVE N, KENT WA
Company Phone: 253-859-4444
Contact Person: ZACK LARSON
Dates: 2002 TO DATE

Company Name: FIRST AMERICA/FIRST TRANSIT
Company Address: 2310 104TH ST CT S, LAKEWOOD WA.
Company Phone: 253-589-9080
Contact Person: JAMES CRABBE
Dates: 2012 TO DATE

Company Name: J.H. LARGE
Company Address: 5317 131ST ST CT E, TACOMA WA
Company Phone: 253-537-9333
Contact Person: NICK OR SCOTT LATHEROW
Dates: 1995 TO DATE

SECTION 8 Bid Opening Label

Complete the form below (or a reasonable facsimile thereof) and affix to the exterior lower left hand corner of the submission package.

URGENT – SEALED BID ENCLOSED
Do Not Delay – Deliver Immediately

URGENT

King County

King County
Procurement and Payables Section
Chinook Building, 3rd FL
CNK-ES-0340
401 Fifth Avenue, Seattle, WA 98104

URGENT

Bid No.: **1199-16-PLR**

Bid Title: **Donaldson Air Filters or Approved Equal**

Due Date: JUNE 21, 2016

Vendor: FLEETPRIDE

ATTACHMENT A

BUY AMERICA CERTIFICATE

Certificate of Compliance with Section 165(A)

Par. 661.5 GENERAL REQUIREMENTS FOR STEEL AND MANUFACTURED PRODUCTS.

1. Except as provided in Part 661 no funds may be obligated by FTA for a grantee project unless all steel and manufactured products used in the project are produced in the United States.
2. All steel manufacturing processes must take place in United States, except metallurgical processes involving refine of steel additives.
3. The steel requirements apply to all steel items including, but not limited to, structural steel, running rail and contact rail.
4. For a manufactured product to be considered produced in the United States:
   (a) All of the manufacturing processes for the product must take place in the United States; and
   (b) All items or material used in the product must be of United States origin.
5. Subcomponents, such as bus parts, may be foreign sourced. Such products are considered Buy America compliant.

The vendor hereby certifies that it **Will** comply with the requirements of Section 165(a) of the Surface Transportation Assistance Act of 1982, as amended, and the regulations in 49 CFR Part 661.

Signature: Stacy K Colz Date: 6/21/10

Title: Branch Manager

Company Name: FleetPride Inc

OR

Certificate of Noncompliance with Section 165(a)

The vendor hereby certifies that it cannot comply with the requirements of Section 165(a) of the Surface Transportation Assistance Act of 1982, as amended, but it may qualify for an exception to the requirement pursuant to Section 165(b)(2) or (b)(4) of the Surface Transportation Assistance Act of 1982 and regulations in 49 CFR Part 661.7.

Signature: _____ Date: _____

Title: _____

Company Name: _____

It is important to remember that this Bid is funded in part by the FEDERAL TRANSIT ADMINISTRATION (FTA). In accordance with FTA requirements, each vendor shall complete this attachment and submit it to the County with and as a part of their Bid.

ATTACHMENT B

CERTIFICATE OF LOBBYING ACTIVITIES

CONTRACT/PROCUREMENT NO. 1199-16-RLR

The undersigned certifies, to the best of his or her knowledge and belief, that:

A. No federally appropriated funds have been paid or Will be paid, by or on behalf of the undersigned, to any Person for influencing or attempting to influence an officer or employee of any agency, a Member of Congress, or officer or employee of Congress, or an employee of a Member of Congress in connection with the awarding of any federal Contract, the making of any federal grant, the making of any federal loan, the entering into of any cooperative agreement, and the extension, continuation, renewal, amendment or modification of any federal Contract, grant, loan or cooperative agreement.

B. If any funds other than federally appropriated funds have been paid or Will be paid to any Person for influencing or attempting to influence an officer or employee of any agency, a Member of Congress, an officer or employee of Congress or an employee or a Member of Congress in connection with this federal Contract, grant, loan or cooperative agreement, the undersigned Shall complete and submit Standard Form-LLL, "Disclosure Form to Report Lobbying," to the Contract administrator.

C. The undersigned Shall require that the language of this certification be included in the award documents for all sub-awards at all tiers (including sub-Contracts, sub-grants and Contracts under grants,, loans and cooperative agreements) and that all recipients of Subcontract awards in excess of $150,000 Shall certify and disclose accordingly.

This certification is a material representation of fact upon which reliance was placed when this transaction was made or entered into. Submission of this certification is a prerequisite for making or entering into this transaction imposed by § 1352, Title 31, U.S. Code. Any Person who fails to file the required certification shall be subject to a civil penalty of not less than $10,000 and not more than $150,000 for each such failure.

Date: 6/21/16

Company Name: Fleetpride Inc

Authorized Signature:

Printed Name/Title: Stacy Kiotz

Air Filter Flow Test Report

Test Number:	1082310	Tech:	Igron
Sample Number:	3	Report Date:	########
Filter Number:	PA2821	Filter Mfg.:	Baldwin
Housing Number:	Universal 8"	Housing Mfg.:	Baldwin
Date Code:	81610		
Test Description:	PA2821 - A14-85 media		

Test Conditions

Flow:	1200 SCFM	Temperature:	76.28 DEG. F
Barometric Pressure:	27.84 IN. HG	Humidity:	61.38 %
Number of Pleats	230	Flow Direction:	OSI
Pleat Depth:	0.00		

Test Results

Flow	Restriction IN. H2O		
SCFM	Gross	Tare	Net
24.5	0.0	0.0	0.0
586.7	1.6	0.0	1.6
887.8	3.2	0.0	3.2
1180.7	5.3	0.0	5.3
1475.5	7.8	0.0	7.8
1774.2	10.7	0.0	10.7

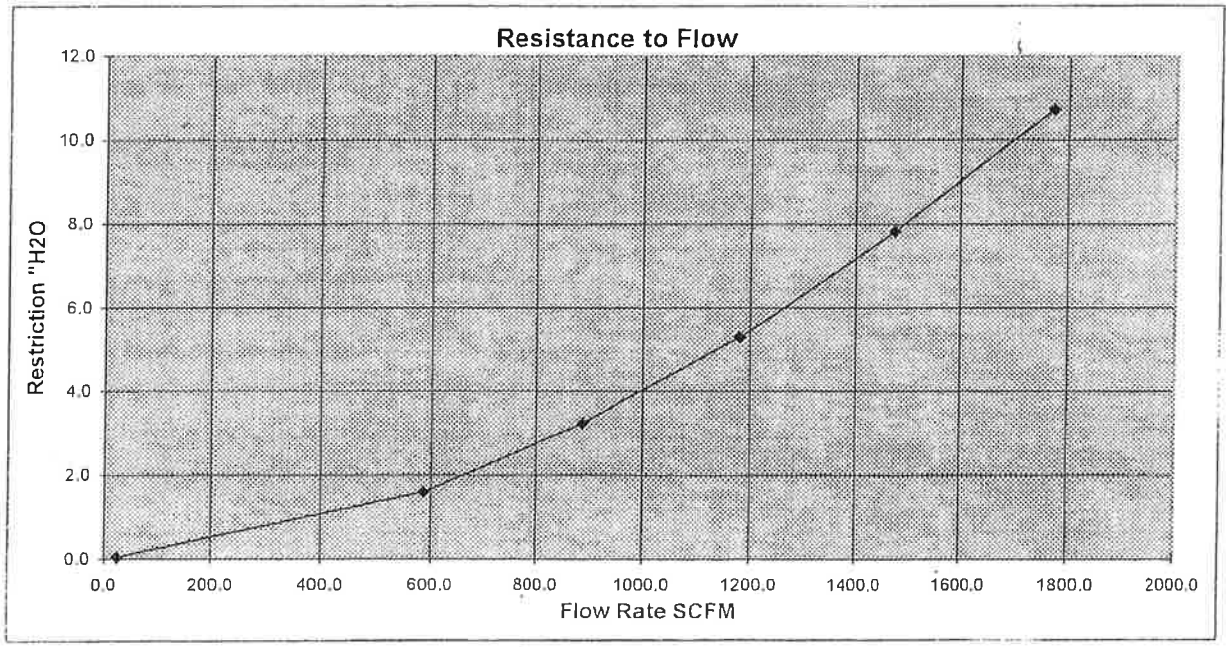

DRAWING NO.
PA2821

GOTHENBURG
ES1.01

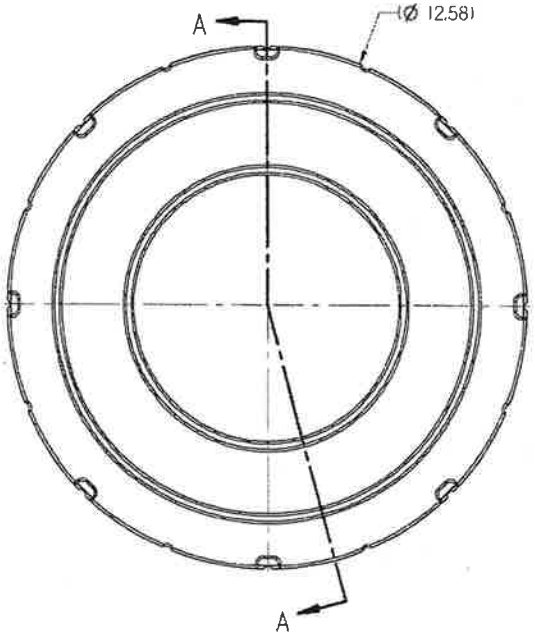

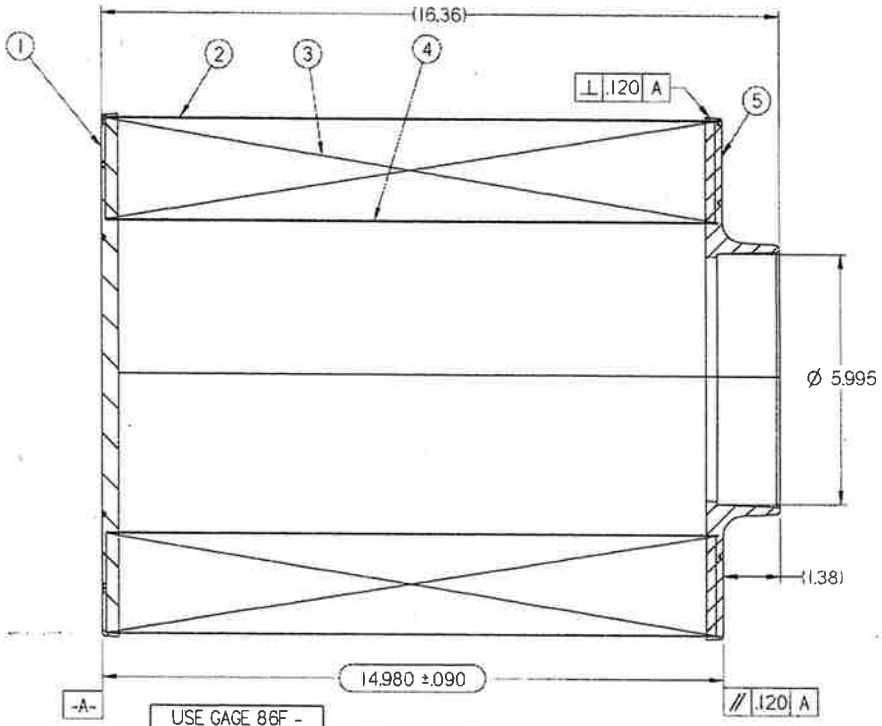

USE GAGE 86F - SNOUT END DOWN

SECTION A-A

CIRCLED DIMENSIONS ARE SIGNIFICANT

NOTES:

OPEN	275342 U2821B	PLEAT COUNT	230
		PLEAT HEIGHT	2.50
CLOSED	275259 U2831A	PP TYPE	18
		FLOW	OSI
URETHANE RECIPE		MEDIA	

ITEM NO	6 DIGIT	DESCRIPTION
5	278019	MOL;DU2821B OPEN,12.57X6.46
4	278035	WR-G60;14.78x39.22
3	290709	A14-85;14.76 PAPER
2	278042	CT-G60;14.78x23.80
1	276893	MOLD;U2831A CLOSED,12.57

PARTS LIST : 056482 - PA2821DSGN

CONFIDENTIAL: ALL PROPERTY RIGHTS RESERVED BY BALDWIN FILTERS. THIS DRAWING SHALL NOT BE RELEASED TO THIRD PARTIES WITHOUT THE WRITTEN CONSENT OF BALDWIN FILTERS.

UNITS: IMPERIAL UNLESS OTHERWISE NOTED
TOLERANCES UNLESS OTHERWISE NOTED
DECIMAL ± .XX = .020 .XXX = .010
ANGULAR ±

e	BUY TO MAKE ECO 0902146-9	12/1/10	JDR
f	CHANGED PER ECO 1200467	4/4/12	TEY
g	CHANGED PER ECO 1301021	7/8/13	TEY

P.O. BOX 6010
KEARNEY, NE 68848
(800) 822-5394
(308) 234-1951

BALDWIN FILTERS

PA2821 BALDWIN FLTR

MATERIAL: AS LISTED

DES.	DR.	CK.	PART NO.	SCALE	DATE
JDR	JDR	KWL	PA2821	3/8" = 1"	9/1/10